November 2012

# SERVICE MANUAL ADDENDUM

# IC-7800

## CONTENTS

PARTS LIST . . . . . 1
BOARD LAYOUTS . . . . . 64
VOLTAGE DIAGRAM . . . . . 66

# PARTS LIST

## [FRONT UNIT]

| REF NO. | PARTS NO. | DESCRIPTION | M. | H/V LOCATION |
|---|---|---|---|---|
| W1 | 8900015930 | CAB OPC-886A (P1N10L75) <TJM> | | |
| W2 | 8900015930 | CAB OPC-886A (P1N10L75) <TJM> | | |
| W3 | 8900017810 | CAB OPC-1331A (P0.5N40L70) <TJM> | | |
| W4 | 8900017880 | CAB OPC-849A (P0.5N30L70) <TJM> | | |
| W5 | 8900015930 | CAB OPC-886A (P1N10L75) <TJM> | | |
| W6 | 8900015930 | CAB OPC-886A (P1N10L75) <TJM> | | |
| W7 | 8900017930 | CAB OPC-1336A (P1N18L70) <TJM> | | |
| W8 | 8900015930 | CAB OPC-886A (P1N10L75) <TJM> | | |
| W9 | 8900014871 | CAB OPC-1332A-1(P0.5N40L100) TJM | | |
| W10 | 8900014730 | CAB OPC-683A (P1N10L110) <TJM> | | |
| W11 | 8900017880 | CAB OPC-849A (P0.5N30L70) <TJM> | | |
| W12 | 8900017880 | CAB OPC-849A (P0.5N30L70) <TJM> | | |
| W13 | 8900015930 | CAB OPC-886A (P1N10L75) <TJM> | | |
| W14 | 8900017880 | CAB OPC-849A (P0.5N30L70) <TJM> | | |
| W15 | 8900015930 | CAB OPC-886A (P1N10L75) <TJM> | | |
| EP1 | 6910023970 | UNI T070W2D6 | | |
| EP11 | 6910011090 | SEN RMS20-250-201-P | | |
| EP12 | 6910011090 | SEN RMS20-250-201-P | | |
| EP13 | 0880001460 | UNI EX-2500 #03 SENSOR | | |
| EP101 | 6910015650 | E.O S-G2218-3#01 (MOUNT PLATE) | | |
| EP102 | 6910015650 | E.O S-G2218-3#01 (MOUNT PLATE) | | |

## [VR-A UNIT]

| REF NO. | PARTS NO. | DESCRIPTION | M. | H/V LOCATION |
|---|---|---|---|---|
| R1 | 7210002890 | VAR RK161221005J/RV-308 | | |
| R2 | 7210002890 | VAR RK161221005J/RV-308 | | |
| R3 | 7210002890 | VAR RK161221005J/RV-308 | | |
| R4 | 7210002890 | VAR RK161221005J/RV-308 | | |
| R11 | 7030003520 | S.RES ERJ3GEYJ 472 V (4.7K) | B | 44.6/27.0 |
| R12 | 7030003520 | S.RES ERJ3GEYJ 472 V (4.7K) | B | 44.6/25.7 |
| R13 | 7030003520 | S.RES ERJ3GEYJ 472 V (4.7K) | B | 59.4/29.9 |
| R14 | 7030003520 | S.RES ERJ3GEYJ 472 V (4.7K) | B | 44.6/24.4 |
| R15 | 7030003520 | S.RES ERJ3GEYJ 472 V (4.7K) | B | 44.6/21.8 |
| R16 | 7030003520 | S.RES ERJ3GEYJ 472 V (4.7K) | B | 44.6/23.1 |
| R17 | 7030003520 | S.RES ERJ3GEYJ 472 V (4.7K) | B | 63.2/9.5 |
| R18 | 7030003520 | S.RES ERJ3GEYJ 472 V (4.7K) | B | 44.6/20.5 |
| R21 | 7030003860 | S.RES ERJ3GE JPW V | B | 49.8/41.4 |
| R22 | 7030003860 | S.RES ERJ3GE JPW V | B | 52.4/42.4 |
| R23 | 7030003860 | S.RES ERJ3GE JPW V | B | 62.8/42.9 |
| R24 | 7030003860 | S.RES ERJ3GE JPW V | B | 56.4/31.1 |
| R25 | 7030003860 | S.RES ERJ3GE JPW V | B | 52.4/44.4 |
| R26 | 7030003860 | S.RES ERJ3GE JPW V | B | 27.8/10.7 |
| C11 | 4030006880 | S.CER C1608 JB 1H 472K-T | B | 49.8/36.4 |
| C12 | 4030006880 | S.CER C1608 JB 1H 472K-T | B | 65.4/36.9 |
| C13 | 4030006880 | S.CER C1608 JB 1H 472K-T | B | 52.4/37.4 |
| C14 | 4030006880 | S.CER C1608 JB 1H 472K-T | B | 62.8/37.9 |
| C15 | 4030006880 | S.CER C1608 JB 1H 472K-T | B | 49.8/38.4 |
| C16 | 4030006880 | S.CER C1608 JB 1H 472K-T | B | 65.4/38.9 |
| C17 | 4030006880 | S.CER C1608 JB 1H 472K-T | B | 52.4/39.4 |
| C18 | 4030006880 | S.CER C1608 JB 1H 472K-T | B | 62.8/39.9 |
| J1 | 6510021722 | S.CON 30FLT-SM2-TB(LF)(SN)(M) | B | 57.6/41.2 |
| J2 | 6510018921 | S.CON B8B-PH-SM4-TB(LF)(SN) | B | 20.0/4.5 |
| J3 | 6510019971 | S.CON 52808-1071 | B | 9.5/33.1 |
| J4 | 6510019971 | S.CON 52808-1071 | B | 9.5/17.9 |
| EP2 | 6910012350 | S.BEA MMZ1608Y 102BT | B | 13.7/29.6 |
| EP3 | 6910012350 | S.BEA MMZ1608Y 102BT | B | 16.5/30.6 |
| EP5 | 6910012350 | S.BEA MMZ1608Y 102BT | B | 2.7/8.2 |
| EP6 | 6910012350 | S.BEA MMZ1608Y 102BT | B | 7.7/7.8 |
| EP7 | 6910012350 | S.BEA MMZ1608Y 102BT | B | 17.3/10.8 |
| EP8 | 6910012350 | S.BEA MMZ1608Y 102BT | B | 16.0/10.8 |
| EP9 | 6910012350 | S.BEA MMZ1608Y 102BT | B | 10.3/7.0 |
| EP10 | 6910012350 | S.BEA MMZ1608Y 102BT | B | 11.6/9.2 |
| EP11 | 6910012350 | S.BEA MMZ1608Y 102BT | B | 5.4/14.1 |
| EP12 | 6910012350 | S.BEA MMZ1608Y 102BT | B | 5.4/21.5 |
| EP13 | 6910012350 | S.BEA MMZ1608Y 102BT | B | 13.7/20.4 |
| EP14 | 6910012350 | S.BEA MMZ1608Y 102BT | B | 5.4/19.3 |
| EP15 | 6910012350 | S.BEA MMZ1608Y 102BT | B | 13.7/18.4 |
| EP16 | 6910012350 | S.BEA MMZ1608Y 102BT | B | 16.2/17.4 |
| EP17 | 6910012350 | S.BEA MMZ1608Y 102BT | B | 13.7/16.4 |
| EP18 | 6910012350 | S.BEA MMZ1608Y 102BT | B | 16.2/15.5 |
| EP19 | 6910012350 | S.BEA MMZ1608Y 102BT | B | 13.7/14.6 |
| EP20 | 6910012350 | S.BEA MMZ1608Y 102BT | B | 12.6/13.3 |
| EP21 | 6910012350 | S.BEA MMZ1608Y 102BT | B | 13.7/25.0 |

Eqv.= This component is equivalent to the REF No. component listed above, and may be substituted on parts orders and repairs.

M.=Mounted side (T: Mounted on the Top side, B: Mounted on the Bottom side)
S.=Surface mount

## [VR-B UNIT]

| REF NO. | PARTS NO. | DESCRIPTION | M. | H/V LOCATION |
|---|---|---|---|---|
| R1 | 7210003160 | VAR RV-317 (RK0972210) | | |
| R2 | 7210003160 | VAR RV-317 (RK0972210) | | |
| R3 | 7030003520 | S.RES ERJ3GEYJ 472 V (4.7K) | T | 28.7/2.7 |
| R4 | 7030003520 | S.RES ERJ3GEYJ 472 V (4.7K) | T | 27.9/8.4 |
| R5 | 7030003520 | S.RES ERJ3GEYJ 472 V (4.7K) | T | 10.5/2.8 |
| R6 | 7030003520 | S.RES ERJ3GEYJ 472 V (4.7K) | T | 11.2/8.4 |
| C1 | 4030006880 | S.CER C1608 JB 1H 472K-T | T | 12.5/8.4 |
| C2 | 4030006880 | S.CER C1608 JB 1H 472K-T | T | 11.8/2.8 |
| C3 | 4030006880 | S.CER C1608 JB 1H 472K-T | T | 26.6/8.4 |
| C4 | 4030006880 | S.CER C1608 JB 1H 472K-T | T | 27.4/2.7 |
| J1 | 6510019971 | S.CON 52808-1071 | T | 19.5/5.0 |

## [VR-C UNIT]

| REF NO. | PARTS NO. | DESCRIPTION | M. | H/V LOCATION |
|---|---|---|---|---|
| R1 | 7210003160 | VAR RV-317 (RK0972210) | | |
| R2 | 7210003160 | VAR RV-317 (RK0972210) | | |
| R3 | 7030003520 | S.RES ERJ3GEYJ 472 V (4.7K) | T | 28.7/2.7 |
| R4 | 7030003520 | S.RES ERJ3GEYJ 472 V (4.7K) | T | 27.9/8.4 |
| R5 | 7030003520 | S.RES ERJ3GEYJ 472 V (4.7K) | T | 10.5/2.8 |
| R6 | 7030003520 | S.RES ERJ3GEYJ 472 V (4.7K) | T | 11.2/8.4 |
| C1 | 4030006880 | S.CER C1608 JB 1H 472K-T | T | 12.5/8.4 |
| C2 | 4030006880 | S.CER C1608 JB 1H 472K-T | T | 11.8/2.8 |
| C3 | 4030006880 | S.CER C1608 JB 1H 472K-T | T | 26.6/8.4 |
| C4 | 4030006880 | S.CER C1608 JB 1H 472K-T | T | 27.4/2.7 |
| J1 | 6510019971 | S.CON 52808-1071 | T | 19.5/5.0 |

Eqv.= This component is equivalent to the REF No. component listed above, and may be substituted on parts orders and repairs.

M.=Mounted side (T: Mounted on the Top side, B: Mounted on the Bottom side)
S.=Surface mount

## [VR-D UNIT]

| REF NO. | PARTS NO. | DESCRIPTION | M. | H/V LOCATION |
|---|---|---|---|---|
| R1 | 7210001130 | VAR RK097111T005A (10KB) | | |
| R2 | 7210001130 | VAR RK097111T005A (10KB) | | |
| R3 | 7210001130 | VAR RK097111T005A (10KB) | | |
| R4 | 7210001130 | VAR RK097111T005A (10KB) | | |
| R5 | 7210001130 | VAR RK097111T005A (10KB) | | |
| R6 | 7210001130 | VAR RK097111T005A (10KB) | | |
| R7 | 7210001130 | VAR RK097111T005A (10KB) | | |
| R11 | 7030003520 | S.RES ERJ3GEYJ 472 V (4.7K) | B | 11.4/3.6 |
| R12 | 7030003520 | S.RES ERJ3GEYJ 472 V (4.7K) | B | 28.5/3.6 |
| R13 | 7030003520 | S.RES ERJ3GEYJ 472 V (4.7K) | B | 45.3/3.6 |
| R14 | 7030003520 | S.RES ERJ3GEYJ 472 V (4.7K) | B | 62.4/3.6 |
| R15 | 7030003520 | S.RES ERJ3GEYJ 472 V (4.7K) | B | 79.2/3.6 |
| R16 | 7030003520 | S.RES ERJ3GEYJ 472 V (4.7K) | B | 96.3/3.6 |
| R17 | 7030003520 | S.RES ERJ3GEYJ 472 V (4.7K) | B | 100.6/6.5 |
| C11 | 4030006880 | S.CER C1608 JB 1H 472K-T | B | 11.4/2.1 |
| C12 | 4030006880 | S.CER C1608 JB 1H 472K-T | B | 28.5/2.1 |
| C13 | 4030006880 | S.CER C1608 JB 1H 472K-T | B | 45.3/2.1 |
| C14 | 4030006880 | S.CER C1608 JB 1H 472K-T | B | 62.4/2.1 |
| C15 | 4030006880 | S.CER C1608 JB 1H 472K-T | B | 79.2/2.0 |
| C16 | 4030006880 | S.CER C1608 JB 1H 472K-T | B | 96.3/2.0 |
| C17 | 4030006880 | S.CER C1608 JB 1H 472K-T | B | 100.6/4.9 |
| J1 | 6510019971 | S.CON 52808-1071 | B | 43.0/16.0 |

## [SW-A UNIT]

| REF NO. | PARTS NO. | DESCRIPTION | M. | H/V LOCATION |
|---|---|---|---|---|
| R2 | 7030003400 | S.RES ERJ3GEYJ 471 V (470) | B | 8.4/85.5 |
| R3 | 7030003420 | S.RES ERJ3GEYJ 681 V (680) | B | 8.4/53.1 |
| R4 | 7030003400 | S.RES ERJ3GEYJ 471 V (470) | B | 8.4/56.1 |
| R6 | 7030003400 | S.RES ERJ3GEYJ 471 V (470) | B | 26.9/42.4 |
| R7 | 7030003400 | S.RES ERJ3GEYJ 471 V (470) | B | 33.1/41.7 |
| R8 | 7030003400 | S.RES ERJ3GEYJ 471 V (470) | B | 51.7/40.4 |
| R9 | 7030003400 | S.RES ERJ3GEYJ 471 V (470) | B | 62.5/36.1 |
| R10 | 7030003400 | S.RES ERJ3GEYJ 471 V (470) | B | 75.6/36.1 |
| R11 | 7030003400 | S.RES ERJ3GEYJ 471 V (470) | B | 90.0/37.6 |
| R12 | 7030003400 | S.RES ERJ3GEYJ 471 V (470) | B | 57.9/82.8 |
| R13 | 7030003480 | S.RES ERJ3GEYJ 222 V (2.2K) | B | 3.7/40.9 |
| R14 | 7030003520 | S.RES ERJ3GEYJ 472 V (4.7K) | B | 48.4/80.4 |
| R15 | 7030003480 | S.RES ERJ3GEYJ 222 V (2.2K) | B | 29.7/39.5 |
| R16 | 7030003520 | S.RES ERJ3GEYJ 472 V (4.7K) | B | 41.2/39.5 |
| R17 | 7030003480 | S.RES ERJ3GEYJ 222 V (2.2K) | B | 66.3/36.1 |
| R18 | 7030003520 | S.RES ERJ3GEYJ 472 V (4.7K) | B | 79.5/38.2 |
| R19 | 7030003540 | S.RES ERJ3GEYJ 682 V (6.8K) | B | 57.3/40.5 |
| R20 | 7030003540 | S.RES ERJ3GEYJ 682 V (6.8K) | B | 29.7/40.8 |
| R21 | 7030003540 | S.RES ERJ3GEYJ 682 V (6.8K) | B | 2.5/38.2 |
| R22 | 7030003480 | S.RES ERJ3GEYJ 222 V (2.2K) | B | 100.2/66.5 |
| R23 | 7030003520 | S.RES ERJ3GEYJ 472 V (4.7K) | B | 101.6/63.3 |
| R24 | 7030003580 | S.RES ERJ3GEYJ 153 V (15K) | B | 98.6/41.5 |
| R25 | 7030003480 | S.RES ERJ3GEYJ 222 V (2.2K) | B | 100.4/19.3 |
| R26 | 7030003520 | S.RES ERJ3GEYJ 472 V (4.7K) | B | 100.4/7.3 |
| R27 | 7030003540 | S.RES ERJ3GEYJ 682 V (6.8K) | B | 98.6/77.5 |
| R28 | 7030003540 | S.RES ERJ3GEYJ 682 V (6.8K) | B | 96.3/35.3 |
| R29 | 7030003580 | S.RES ERJ3GEYJ 153 V (15K) | B | 51.3/53.1 |
| R30 | 7030003400 | S.RES ERJ3GEYJ 471 V (470) | B | 47.0/58.0 |
| C1 | 4030011600 | S.CER C1608 JB 1E 104K-T | B | 99.2/63.0 |
| C2 | 4030011600 | S.CER C1608 JB 1E 104K-T | B | 88.9/59.1 |
| C3 | 4030011600 | S.CER C1608 JB 1E 104K-T | B | 99.4/60.5 |
| C4 | 4030011600 | S.CER C1608 JB 1E 104K-T | B | 90.2/59.1 |
| C5 | 4030011600 | S.CER C1608 JB 1E 104K-T | B | 98.9/59.0 |
| C6 | 4030011600 | S.CER C1608 JB 1E 104K-T | B | 53.3/77.2 |
| C7 | 4030011600 | S.CER C1608 JB 1E 104K-T | B | 84.8/80.1 |
| C8 | 4030011600 | S.CER C1608 JB 1E 104K-T | B | 83.6/65.3 |
| C9 | 4030011600 | S.CER C1608 JB 1E 104K-T | B | 88.0/52.3 |
| J1 | 6510019971 | S.CON 52808-1071 | B | 46.7/72.7 |
| J2 | 6510019971 | S.CON 52808-1071 | B | 83.7/72.7 |
| J3 | 6510022472 | S.CON 40FLT-SM2-TB(LF)(SN)(M) | B | 94.4/58.7 |
| DS5 | 5040002980 | S.LED SML-512DW-T86 | T | 8.5/87.7 |
| DS6 | 5040002930 | S.LED SML-512MW T86 | T | 8.5/86.4 |
| DS7 | 5040002930 | S.LED SML-512MW T86 | T | 8.5/41.5 |
| DS8 | 5040002930 | S.LED SML-512MW T86 | T | 26.3/43.0 |
| DS9 | 5040002930 | S.LED SML-512MW T86 | T | 37.8/43.0 |
| DS10 | 5040002930 | S.LED SML-512MW T86 | T | 49.3/43.0 |
| DS11 | 5040002930 | S.LED SML-512MW T86 | T | 63.3/43.0 |
| DS12 | 5040002930 | S.LED SML-512MW T86 | T | 56.3/84.4 |
| DS13 | 5040002930 | S.LED SML-512MW T86 | T | 74.8/43.0 |
| DS14 | 5040002930 | S.LED SML-512MW T86 | T | 86.3/43.0 |
| DS15 | 5040002990 | S.LED SML-512UWT86 | T | 8.5/56.5 |
| DS16 | 5040002930 | S.LED SML-512MW T86 | T | 8.5/55.2 |
| DS17 | 5040002930 | S.LED SML-512MW T86 | T | 56.3/56.4 |
| S1 | 2260002740 | S.SWI LS8J2M-T | T | 9.8/77.2 |
| S2 | 2260002740 | S.SWI LS8J2M-T | T | 8.3/62.5 |
| S3 | 2260002740 | S.SWI LS8J2M-T | T | 8.3/48.8 |
| S4 | 2260002740 | S.SWI LS8J2M-T | T | 8.3/35.1 |
| S5 | 2260002740 | S.SWI LS8J2M-T | T | 37.5/38.9 |
| S6 | 2260002740 | S.SWI LS8J2M-T | T | 26.0/38.9 |
| S7 | 2260002740 | S.SWI LS8J2M-T | T | 49.0/38.9 |
| S8 | 2260002740 | S.SWI LS8J2M-T | T | 63.0/38.9 |
| S11 | 2260002740 | S.SWI LS8J2M-T | T | 56.0/79.0 |
| S12 | 2260002740 | S.SWI LS8J2M-T | T | 74.5/38.9 |
| S13 | 2260002740 | S.SWI LS8J2M-T | T | 86.0/38.9 |
| S14 | 2260002740 | S.SWI LS8J2M-T | T | 100.4/82.7 |
| S15 | 2260002740 | S.SWI LS8J2M-T | T | 100.4/70.7 |
| S16 | 2260002740 | S.SWI LS8J2M-T | T | 100.4/58.7 |
| S17 | 2260002740 | S.SWI LS8J2M-T | T | 100.4/46.7 |
| S18 | 2260002740 | S.SWI LS8J2M-T | T | 100.4/34.7 |
| S19 | 2260002740 | S.SWI LS8J2M-T | T | 100.4/22.7 |
| S20 | 2260002740 | S.SWI LS8J2M-T | T | 100.4/10.7 |
| S21 | 2260002740 | S.SWI LS8J2M-T | T | 56.0/51.0 |

Eqv.= This component is equivalent to the REF No. component listed above, and may be substituted on parts orders and repairs.

M.=Mounted side (T: Mounted on the Top side, B: Mounted on the Bottom side)
S.=Surface mount

## [SW-B UNIT]

| REF NO. | PARTS NO. | DESCRIPTION | M. | H/V LOCATION |
|---|---|---|---|---|
| J1 | 6510020531 | S.CON 52808-1871 | B | 112.1/20.3 |
| S1 | 2260002740 | S.SWI LS8J2M-T | T | 16.9/24.6 |
| S2 | 2260002740 | S.SWI LS8J2M-T | T | 38.9/24.6 |
| S3 | 2260002740 | S.SWI LS8J2M-T | T | 60.9/24.6 |
| S4 | 2260002740 | S.SWI LS8J2M-T | T | 82.9/24.6 |
| S5 | 2260002740 | S.SWI LS8J2M-T | T | 104.9/24.6 |
| S6 | 2260002740 | S.SWI LS8J2M-T | T | 126.9/24.6 |
| S7 | 2260002740 | S.SWI LS8J2M-T | T | 148.9/24.6 |
| S8 | 2260002740 | S.SWI LS8J2M-T | T | 16.9/15.2 |
| S9 | 2260002740 | S.SWI LS8J2M-T | T | 38.9/15.2 |
| S10 | 2260002740 | S.SWI LS8J2M-T | T | 60.9/15.2 |
| S11 | 2260002740 | S.SWI LS8J2M-T | T | 82.9/15.2 |
| S12 | 2260002740 | S.SWI LS8J2M-T | T | 104.9/15.2 |
| S13 | 2260002740 | S.SWI LS8J2M-T | T | 126.9/15.2 |
| S14 | 2260002740 | S.SWI LS8J2M-T | T | 148.9/15.2 |
| S15 | 2260002740 | S.SWI LS8J2M-T | T | 125.5/3.2 |
| S16 | 2260002740 | S.SWI LS8J2M-T | T | 145.2/3.2 |
| S17 | 2260002740 | S.SWI LS8J2M-T | T | 167.4/3.2 |

## [SW-C UNIT]

| REF NO. | PARTS NO. | DESCRIPTION | M. | H/V LOCATION |
|---|---|---|---|---|
| R1 | 7030003480 | S.RES ERJ3GEYJ 222 V (2.2K) | B | 32.7/126.8 |
| R2 | 7030003520 | S.RES ERJ3GEYJ 472 V (4.7K) | B | 30.7/122.6 |
| R3 | 7030003580 | S.RES ERJ3GEYJ 153 V (15K) | B | 30.7/118.2 |
| R4 | 7030003540 | S.RES ERJ3GEYJ 682 V (6.8K) | B | 30.7/125.7 |
| R5 | 7030003480 | S.RES ERJ3GEYJ 222 V (2.2K) | B | 30.7/100.2 |
| R6 | 7030003520 | S.RES ERJ3GEYJ 472 V (4.7K) | B | 30.7/97.4 |
| R7 | 7030003580 | S.RES ERJ3GEYJ 153 V (15K) | B | 32.0/94.8 |
| R8 | 7030003540 | S.RES ERJ3GEYJ 682 V (6.8K) | B | 32.0/101.7 |
| R9 | 7030003480 | S.RES ERJ3GEYJ 222 V (2.2K) | B | 34.8/71.4 |
| R10 | 7030003520 | S.RES ERJ3GEYJ 472 V (4.7K) | B | 35.6/69.4 |
| R11 | 7030003580 | S.RES ERJ3GEYJ 153 V (15K) | B | 35.6/66.7 |
| R12 | 7030003540 | S.RES ERJ3GEYJ 682 V (6.8K) | B | 32.7/84.5 |
| R13 | 7030003480 | S.RES ERJ3GEYJ 222 V (2.2K) | B | 43.2/46.9 |
| R14 | 7030003520 | S.RES ERJ3GEYJ 472 V (4.7K) | B | 49.3/44.4 |
| R15 | 7030003540 | S.RES ERJ3GEYJ 682 V (6.8K) | B | 43.2/50.6 |
| R51 | 7030003400 | S.RES ERJ3GEYJ 471 V (470) | B | 38.4/124.3 |
| R52 | 7030003400 | S.RES ERJ3GEYJ 471 V (470) | B | 41.3/124.3 |
| R53 | 7030003400 | S.RES ERJ3GEYJ 471 V (470) | B | 37.9/107.8 |
| R54 | 7030003400 | S.RES ERJ3GEYJ 471 V (470) | B | 46.6/102.1 |
| R55 | 7030003400 | S.RES ERJ3GEYJ 471 V (470) | B | 43.3/98.9 |
| R56 | 7030003400 | S.RES ERJ3GEYJ 471 V (470) | B | 46.6/99.4 |
| R57 | 7030003400 | S.RES ERJ3GEYJ 471 V (470) | B | 48.7/90.0 |
| R58 | 7030003400 | S.RES ERJ3GEYJ 471 V (470) | B | 48.7/93.4 |
| C1 | 4030011600 | S.CER C1608 JB 1E 104K-T | B | 28.9/94.6 |
| C2 | 4030011600 | S.CER C1608 JB 1E 104K-T | B | 41.2/82.0 |
| C3 | 4030011600 | S.CER C1608 JB 1E 104K-T | B | 32.1/71.4 |
| C4 | 4030011600 | S.CER C1608 JB 1E 104K-T | B | 43.5/82.4 |
| J1 | 6510021722 | S.CON 30FLT-SM2-TB(LF)(SN)(M) | B | 38.0/89.0 |
| J2 | 6510019971 | S.CON 52808-1071 | B | 44.3/113.1 |
| DS51 | 5040002930 | S.LED SML-512MW T86 | T | 36.5/123.3 |
| DS52 | 5040002930 | S.LED SML-512MW T86 | T | 48.0/123.3 |
| DS53 | 5040002930 | S.LED SML-512MW T86 | T | 36.5/104.8 |
| DS54 | 5040002930 | S.LED SML-512MW T86 | T | 48.0/104.8 |
| DS55 | 5040002930 | S.LED SML-512MW T86 | T | 36.5/94.8 |
| DS56 | 5040002930 | S.LED SML-512MW T86 | T | 48.0/94.8 |
| DS57 | 5040002930 | S.LED SML-512MW T86 | T | 36.5/84.8 |
| DS58 | 5040002930 | S.LED SML-512MW T86 | T | 48.0/84.8 |
| S1 | 2260002740 | S.SWI LS8J2M-T | T | 36.8/129.1 |
| S2 | 2260002740 | S.SWI LS8J2M-T | T | 48.3/129.1 |
| S3 | 2260002740 | S.SWI LS8J2M-T | T | 36.8/118.9 |
| S4 | 2260002740 | S.SWI LS8J2M-T | T | 48.3/118.9 |
| S5 | 2260002740 | S.SWI LS8J2M-T | T | 36.8/100.4 |
| S6 | 2260002740 | S.SWI LS8J2M-T | T | 48.3/100.4 |
| S7 | 2260002740 | S.SWI LS8J2M-T | T | 36.8/90.4 |
| S8 | 2260002740 | S.SWI LS8J2M-T | T | 48.3/90.4 |
| S9 | 2260002740 | S.SWI LS8J2M-T | T | 36.8/80.4 |
| S10 | 2260002740 | S.SWI LS8J2M-T | T | 48.3/80.4 |
| S11 | 2260002740 | S.SWI LS8J2M-T | T | 36.8/70.0 |
| S12 | 2260002740 | S.SWI LS8J2M-T | T | 36.8/61.2 |
| S13 | 2260002740 | S.SWI LS8J2M-T | T | 36.8/52.4 |
| S14 | 2260002740 | S.SWI LS8J2M-T | T | 36.5/42.7 |
| S15 | 2260002740 | S.SWI LS8J2M-T | T | 61.5/42.7 |
| S16 | 2260002740 | S.SWI LS8J2M-T | T | 12.3/32.5 |
| S17 | 2260002740 | S.SWI LS8J2M-T | T | 74.4/27.5 |
| S18 | 2260002740 | S.SWI LS8J2M-T | T | 12.3/14.7 |
| S19 | 2260002740 | S.SWI LS8J2M-T | T | 75.3/14.2 |
| S20 | 2260002740 | S.SWI LS8J2M-T | T | 12.3/2.4 |
| S21 | 2260002740 | S.SWI LS8J2M-T | T | 75.3/2.4 |
| S22 | 2260002740 | S.SWI LS8J2M-T | T | 25.8/2.4 |

Eqv.= This component is equivalent to the REF No. component listed above, and may be substituted on parts orders and repairs.

M.=Mounted side (T: Mounted on the Top side, B: Mounted on the Bottom side)
S.=Surface mount

## [JACK UNIT]

| REF NO. | PARTS NO. | DESCRIPTION | M. | H/V LOCATION |
|---|---|---|---|---|
| L1 | 6200003950 | S.COI HF50ACC 322513-T | B | 4.5/17.8 |
| L2 | 6200003950 | S.COI HF50ACC 322513-T | B | 2.5/12.5 |
| L3 | 6200003950 | S.COI HF50ACC 322513-T | B | 4.6/2.0 |
| L4 | 6180000900 | COI LAL 03NA 101K | | |
| L5 | 6180000900 | COI LAL 03NA 101K | | |
| L6 | 6180000900 | COI LAL 03NA 101K | | |
| L101 | 6180000900 | COI LAL 03NA 101K | | |
| L102 | 6180000900 | COI LAL 03NA 101K | | |
| L103 | 6180000900 | COI LAL 03NA 101K | | |
| R1 | 7030006060 | S.RES ERJ12YJ100U (10) | B | 16.4/76.0 |
| R2 | 7030006060 | S.RES ERJ12YJ100U (10) | B | 16.6/67.8 |
| C1 | 4030006880 | S.CER C1608 JB 1H 472K-T | B | 26.4/2.1 |
| C2 | 4030006880 | S.CER C1608 JB 1H 472K-T | B | 26.4/4.8 |
| C3 | 4030006880 | S.CER C1608 JB 1H 472K-T | B | 20.7/6.9 |
| C101 | 4030006880 | S.CER C1608 JB 1H 472K-T | B | 15.3/6.9 |
| C102 | 4030006880 | S.CER C1608 JB 1H 472K-T | B | 11.6/2.1 |
| J1 | 6510019971 | S.CON 52808-1071 | B | 19.0/3.2 |
| J2 | 6510027890 | CON 01J0370-00 | | |
| J102 | 6510023900 | CON LGR4619-7000 | | |
| EP101 | 6910012350 | S.BEA MMZ1608Y 102BT | B | 15.3/8.2 |
| EP102 | 6910012350 | S.BEA MMZ1608Y 102BT | B | 10.3/2.1 |

## [MIC UNIT]

| REF NO. | PARTS NO. | DESCRIPTION | M. | H/V LOCATION |
|---|---|---|---|---|
| L1 | 6200003261 | S.COI NLV32T-101J | T | 33.0/7.8 |
| L2 | 6200003261 | S.COI NLV32T-101J | T | 23.5/2.7 |
| L3 | 6200003261 | S.COI NLV32T-101J | T | 16.2/2.0 |
| L4 | 6200003950 | S.COI HF50ACC 322513-T | B | 15.2/15.1 |
| C1 | 4030006880 | S.CER C1608 JB 1H 472K-T | B | 8.6/67.0 |
| C2 | 4030006880 | S.CER C1608 JB 1H 472K-T | B | 5.4/69.4 |
| C3 | 4030006880 | S.CER C1608 JB 1H 472K-T | B | 11.1/67.5 |
| C4 | 4030007130 | S.CER C1608 CH 1H 101J-T | B | 35.9/71.5 |
| C5 | 4030006880 | S.CER C1608 JB 1H 472K-T | B | 31.7/36.0 |
| C6 | 4030006880 | S.CER C1608 JB 1H 472K-T | B | 9.6/0.9 |
| C7 | 4030006880 | S.CER C1608 JB 1H 472K-T | B | 7.8/10.2 |
| C8 | 4030007090 | S.CER C1608 CH 1H 470J-T | B | 9.4/13.9 |
| J1 | 6510000191 | CON FM214-8SS(P)-1 | | |
| J2 | 6510019971 | S.CON 52808-1071 | B | 12.8/20.2 |
| EP2 | 6910012350 | S.BEA MMZ1608Y 102BT | B | 4.2/6.3 |
| EP3 | 6910012350 | S.BEA MMZ1608Y 102BT | B | 7.6/2.1 |
| EP4 | 6910012350 | S.BEA MMZ1608Y 102BT | B | 13.7/31.6 |
| EP5 | 6910012350 | S.BEA MMZ1608Y 102BT | B | 16.5/32.6 |
| EP6 | 6910012350 | S.BEA MMZ1608Y 102BT | B | 13.7/34.8 |
| EP7 | 6910015130 | S.BEA MMZ1608D 301BT | B | 13.7/36.6 |
| EP8 | 6910015130 | S.BEA MMZ1608D 301BT | B | 16.5/35.8 |
| EP9 | 6910015130 | S.BEA MMZ1608D 301BT | B | 13.7/33.5 |
| EP10 | 6910015130 | S.BEA MMZ1608D 301BT | B | 13.7/23.7 |
| EP11 | 6910012350 | S.BEA MMZ1608Y 102BT | B | 13.7/22.4 |

Eqv.= This component is equivalent to the REF No. component listed above, and may be substituted on parts orders and repairs.

M.=Mounted side (T: Mounted on the Top side, B: Mounted on the Bottom side)
S.=Surface mount

## [TENKEY UNIT]

| REF NO. | PARTS NO. | DESCRIPTION | | M. | H/V LOCATION |
|---|---|---|---|---|---|
| IC1 | 1130011510 | S.IC | BU2099FV-E2 | B | 37.5/67.4 |
| IC2 | 1130011510 | S.IC | BU2099FV-E2 | B | 33.6/31.8 |
| R1 | 7030003480 | S.RES | ERJ3GEYJ 222 V (2.2K) | T | 24.1/6.1 |
| R2 | 7030003520 | S.RES | ERJ3GEYJ 472 V (4.7K) | T | 16.8/5.4 |
| R3 | 7030003580 | S.RES | ERJ3GEYJ 153 V (15K) | B | 13.8/47.5 |
| R4 | 7030003540 | S.RES | ERJ3GEYJ 682 V (6.8K) | B | 16.4/79.3 |
| R5 | 7030003480 | S.RES | ERJ3GEYJ 222 V (2.2K) | B | 31.5/67.5 |
| R6 | 7030003520 | S.RES | ERJ3GEYJ 472 V (4.7K) | B | 30.8/65.6 |
| R7 | 7030003580 | S.RES | ERJ3GEYJ 153 V (15K) | B | 32.3/50.0 |
| R8 | 7030003540 | S.RES | ERJ3GEYJ 682 V (6.8K) | B | 30.3/78.3 |
| R9 | 7030003480 | S.RES | ERJ3GEYJ 222 V (2.2K) | B | 49.8/70.1 |
| R10 | 7030003520 | S.RES | ERJ3GEYJ 472 V (4.7K) | B | 49.8/62.3 |
| R11 | 7030003580 | S.RES | ERJ3GEYJ 153 V (15K) | B | 47.6/52.7 |
| R12 | 7030003540 | S.RES | ERJ3GEYJ 682 V (6.8K) | B | 49.8/78.5 |
| R51 | 7030003390 | S.RES | ERJ3GEYJ 391 V (390) | B | 8.1/78.1 |
| R52 | 7030003390 | S.RES | ERJ3GEYJ 391 V (390) | B | 8.1/75.4 |
| R53 | 7030003390 | S.RES | ERJ3GEYJ 391 V (390) | B | 8.1/71.0 |
| R54 | 7030003390 | S.RES | ERJ3GEYJ 391 V (390) | B | 8.1/72.9 |
| R55 | 7030003390 | S.RES | ERJ3GEYJ 391 V (390) | B | 10.7/58.3 |
| R56 | 7030003390 | S.RES | ERJ3GEYJ 391 V (390) | B | 12.0/58.3 |
| R57 | 7030003390 | S.RES | ERJ3GEYJ 391 V (390) | B | 8.1/49.6 |
| R58 | 7030003390 | S.RES | ERJ3GEYJ 391 V (390) | B | 8.1/46.9 |
| R59 | 7030003390 | S.RES | ERJ3GEYJ 391 V (390) | B | 19.1/78.1 |
| R60 | 7030003390 | S.RES | ERJ3GEYJ 391 V (390) | B | 19.1/75.4 |
| R61 | 7030003390 | S.RES | ERJ3GEYJ 391 V (390) | B | 25.6/64.6 |
| R62 | 7030003390 | S.RES | ERJ3GEYJ 391 V (390) | B | 25.6/65.9 |
| R63 | 7030003390 | S.RES | ERJ3GEYJ 391 V (390) | B | 25.6/51.7 |
| R64 | 7030003390 | S.RES | ERJ3GEYJ 391 V (390) | B | 25.6/53.0 |
| R65 | 7030003390 | S.RES | ERJ3GEYJ 391 V (390) | B | 25.6/49.6 |
| R66 | 7030003390 | S.RES | ERJ3GEYJ 391 V (390) | B | 25.6/47.0 |
| R67 | 7030003390 | S.RES | ERJ3GEYJ 391 V (390) | B | 43.1/78.1 |
| R68 | 7030003390 | S.RES | ERJ3GEYJ 391 V (390) | B | 43.1/75.4 |
| R69 | 7030003390 | S.RES | ERJ3GEYJ 391 V (390) | B | 43.9/68.6 |
| R70 | 7030003390 | S.RES | ERJ3GEYJ 391 V (390) | B | 43.9/67.3 |
| R71 | 7030003390 | S.RES | ERJ3GEYJ 391 V (390) | B | 43.1/59.1 |
| R72 | 7030003390 | S.RES | ERJ3GEYJ 391 V (390) | B | 43.1/56.4 |
| R73 | 7030003390 | S.RES | ERJ3GEYJ 391 V (390) | B | 44.4/51.4 |
| R74 | 7030003390 | S.RES | ERJ3GEYJ 391 V (390) | B | 44.4/52.7 |
| R75 | 7030003460 | S.RES | ERJ3GEYJ 152 V (1.5K) | B | 29.7/21.1 |
| R76 | 7030003460 | S.RES | ERJ3GEYJ 152 V (1.5K) | B | 44.3/18.1 |
| C1 | 4030011600 | S.CER | C1608 JB 1E 104K-T | B | 8.6/16.2 |
| C2 | 4030011600 | S.CER | C1608 JB 1E 104K-T | B | 2.9/5.6 |
| C3 | 4030011600 | S.CER | C1608 JB 1E 104K-T | B | 14.3/12.3 |
| C4 | 4030011600 | S.CER | C1608 JB 1E 104K-T | B | 10.1/11.3 |
| C5 | 4030011600 | S.CER | C1608 JB 1E 104K-T | B | 1.6/5.6 |
| J1 | 6510021722 | S.CON | 30FLT-SM2-TB(LF)(SN)(M) | B | 5.2/60.0 |
| J2 | 6510021722 | S.CON | 30FLT-SM2-TB(LF)(SN)(M) | B | 5.2/31.7 |
| J3 | 6510021722 | S.CON | 30FLT-SM2-TB(LF)(SN)(M) | B | 50.0/33.0 |
| J4 | 6510019971 | S.CON | 52808-1071 | B | 53.9/57.0 |
| J5 | 6510019971 | S.CON | 52808-1071 | B | 24.5/74.8 |
| J6 | 6510003401 | CON | B04B-EH-S(LF)(SN) | | |
| J7 | 6510018971 | S.CON | B4B-PH-SM4-TB(LF)(SN) | B | 36.5/3.0 |
| DS1 | 5040002980 | S.LED | SML-512DW-T86 | T | 29.5/19.0 |
| DS2 | 5040002980 | S.LED | SML-512DW-T86 | T | 45.5/19.0 |
| S1 | 2260002740 | S.SWI | LS8J2M-T | T | 9.5/34.0 |
| S2 | 2260002740 | S.SWI | LS8J2M-T | T | 9.5/26.0 |
| S3 | 2260002740 | S.SWI | LS8J2M-T | T | 29.5/34.0 |
| S4 | 2260002740 | S.SWI | LS8J2M-T | T | 29.5/26.0 |
| S5 | 2260002740 | S.SWI | LS8J2M-T | T | 45.5/34.0 |
| S6 | 2260002740 | S.SWI | LS8J2M-T | T | 45.5/26.0 |
| S7 | 2260002740 | S.SWI | LS8J2M-T | T | 9.5/12.8 |
| S8 | 2260002740 | S.SWI | LS8J2M-T | T | 29.5/16.0 |
| S9 | 2260002740 | S.SWI | LS8J2M-T | T | 29.5/7.5 |
| S11 | 2260002820 | S.SWI | LS9J2M-2D/D-T | T | 10.6/76.2 |
| S12 | 2260002820 | S.SWI | LS9J2M-2D/D-T | T | 10.6/66.7 |
| S13 | 2260002820 | S.SWI | LS9J2M-2D/D-T | T | 10.6/57.2 |
| S14 | 2260002820 | S.SWI | LS9J2M-2D/D-T | T | 10.6/47.7 |
| S15 | 2260002820 | S.SWI | LS9J2M-2D/D-T | T | 28.1/76.2 |
| S16 | 2260002820 | S.SWI | LS9J2M-2D/D-T | T | 28.1/66.7 |
| S17 | 2260002820 | S.SWI | LS9J2M-2D/D-T | T | 28.1/57.2 |
| S18 | 2260002820 | S.SWI | LS9J2M-2D/D-T | T | 28.1/47.7 |
| S19 | 2260002820 | S.SWI | LS9J2M-2D/D-T | T | 45.6/76.2 |
| S20 | 2260002820 | S.SWI | LS9J2M-2D/D-T | T | 45.6/66.7 |
| S21 | 2260002820 | S.SWI | LS9J2M-2D/D-T | T | 45.6/57.2 |
| S22 | 2260002820 | S.SWI | LS9J2M-2D/D-T | T | 45.6/47.7 |
| S23 | 2260002740 | S.SWI | LS8J2M-T | T | 45.5/16.0 |
| S24 | 2260002740 | S.SWI | LS8J2M-T | T | 45.5/7.5 |

## [PBT1 UNIT]

| REF NO. | PARTS NO. | DESCRIPTION | | M. | H/V LOCATION |
|---|---|---|---|---|---|
| R1 | 7210003180 | VAR | RV-319 (RK0972210) | | |
| R2 | 7030003520 | S.RES | ERJ3GEYJ 472 V (4.7K) | T | 13.6/6.6 |
| R3 | 7030003520 | S.RES | ERJ3GEYJ 472 V (4.7K) | T | 13.6/10.1 |
| C1 | 4030006880 | S.CER | C1608 JB 1H 472K-T | T | 15.7/10.1 |
| C2 | 4030006880 | S.CER | C1608 JB 1H 472K-T | T | 15.7/6.6 |
| J1 | 6510019971 | S.CON | 52808-1071 | T | 24.5/7.0 |
| S1 | 2250000410 | ENC | TP90D96E20-30F-2178-1 | | |

Eqv.= This component is equivalent to the REF No. component listed above, and may be substituted on parts orders and repairs.

M.=Mounted side (T: Mounted on the Top side, B: Mounted on the Bottom side)
S.=Surface mount

## [PBT2 UNIT]

| REF NO. | PARTS NO. | DESCRIPTION | | M. | H/V LOCATION |
|---|---|---|---|---|---|
| R1 | 7210003180 | VAR | RV-319 (RK0972210) | | |
| R2 | 7210003170 | VAR | RV-318 (RK09L1120CON) | | |
| R3 | 7030003520 | S.RES | ERJ3GEYJ 472 V (4.7K) | T | 47.4/8.6 |
| R4 | 7030003520 | S.RES | ERJ3GEYJ 472 V (4.7K) | T | 47.4/9.9 |
| R5 | 7030003520 | S.RES | ERJ3GEYJ 472 V (4.7K) | T | 16.2/12.3 |
| C1 | 4030006880 | S.CER | C1608 JB 1H 472K-T | T | 52.5/10.3 |
| C2 | 4030006880 | S.CER | C1608 JB 1H 472K-T | T | 50.6/10.3 |
| C3 | 4030006880 | S.CER | C1608 JB 1H 472K-T | T | 16.2/11.0 |
| J1 | 6510019971 | S.CON | 52808-1071 | T | 59.1/5.1 |
| S1 | 2250000410 | ENC | TP90D96E20-30F-2178-1 | | |

## [LED UNIT]

| REF NO. | PARTS NO. | DESCRIPTION | | M. | H/V LOCATION |
|---|---|---|---|---|---|
| R1 | 7030003470 | S.RES | ERJ3GEYJ 182 V (1.8K) | T | 9.1/14.9 |
| R2 | 7030003420 | S.RES | ERJ3GEYJ 681 V (680) | T | 21.0/14.9 |
| R3 | 7030003440 | S.RES | ERJ3GEYJ 102 V (1K) | T | 32.2/14.9 |
| R4 | 7030003400 | S.RES | ERJ3GEYJ 471 V (470) | T | 80.2/14.9 |
| R5 | 7030003470 | S.RES | ERJ3GEYJ 182 V (1.8K) | T | 126.0/14.9 |
| R6 | 7030003420 | S.RES | ERJ3GEYJ 681 V (680) | T | 139.0/14.9 |
| R7 | 7030003440 | S.RES | ERJ3GEYJ 102 V (1K) | T | 149.9/14.9 |
| J1 | 6510020711 | S.CON | 52793-1070(1090) | T | 111.3/2.7 |
| DS1 | 5040003001 | S.LED | SML-A12UT T86J | T | 5.6/15.9 |
| DS2 | 5040002961 | S.LED | SML-A12MT T86J | T | 17.6/15.9 |
| DS3 | 5040003011 | S.LED | SML-A12WT T86J | T | 29.6/15.9 |
| DS4 | 5040003490 | S.LED | SMLA13WBDW12T | T | 76.6/15.9 |
| DS5 | 5040003001 | S.LED | SML-A12UT T86J | T | 123.6/15.9 |
| DS6 | 5040002961 | S.LED | SML-A12MT T86J | T | 135.6/15.9 |
| DS7 | 5040003011 | S.LED | SML-A12WT T86J | T | 147.6/15.9 |

Eqv.= This component is equivalent to the REF No. component listed above, and may be substituted on parts orders and repairs.

M.=Mounted side (T: Mounted on the Top side, B: Mounted on the Bottom side)
S.=Surface mount

## [CF UNIT]

| REF NO. | PARTS NO. | DESCRIPTION | | M. | H/V LOCATION |
|---|---|---|---|---|---|
| R1 | 7030003470 | S.RES | ERJ3GEYJ 182 V (1.8K) | T | 8.8/8.7 |
| J1 | 6510024151 | S.CON | 50FY-BMT-TB(LF)(SN) | T | 34.5/4.4 |
| J2 | 6510026930 | S.CON | 31-5620-050-729-871 | T | 34.5/13.6 |
| J3 | 6510021601 | S.CON | S2B-PH-SM4-TB(LF)(SN) | T | 13.7/3.7 |
| DS1 | 5040002990 | S.LED | SML-512UWT86 | T | 61.3/40.5 |
| EP2 | 6910015640 | E.O | 30-5610-000-002-000 | | |

## [DISPLAY UNIT]

| REF NO. | PARTS NO. | DESCRIPTION | | M. | H/V LOCATION |
|---|---|---|---|---|---|
| IC2 | 1130011880 | S.IC | CD4051BPWR | T | 110.5/10.9 |
| IC3 | 1130011880 | S.IC | CD4051BPWR | T | 76.7/20.0 |
| IC4 | 1130011880 | S.IC | CD4051BPWR | T | 24.1/61.3 |
| IC5 | 1130011880 | S.IC | CD4051BPWR | T | 106.9/77.4 |
| IC6 | 1140015180 | S.IC | M30622M6P-535GP(SX-3009B-1) | T | 48.2/27.8 |
| IC7 | 1130011510 | S.IC | BU2099FV-E2 | T | 124.1/59.8 |
| IC201 | 1130009301 | S.IC | TC7SET08FU(T5LJF) | T | 80.2/45.6 |
| IC202 | 1130009301 | S.IC | TC7SET08FU(T5LJF) | T | 105.3/58.5 |
| IC203 | 1130007431 | S.IC | TC7S14FU(TE85RF) | T | 86.0/37.5 |
| IC601 | 1130011551 | S.IC | RX-4581NB-F | T | 39.0/45.9 |
| IC651 | 1110005822 | S.IC | R3112N281A-TR-FE | T | 48.0/91.2 |
| Q200 | 1590000430 | S.TRA | DTC144EUA T106 | T | 40.9/89.7 |
| Q201 | 1550000330 | S.FET | FDC610PZ | T | 111.0/37.0 |
| Q202 | 1590004750 | S.TRA | LMUN5213T1G <SLVJ> | T | 107.8/41.2 |
| Q203 | 1590004750 | S.TRA | LMUN5213T1G <SLVJ> | T | 87.8/34.3 |
| Q204 | 1590004750 | S.TRA | LMUN5213T1G <SLVJ> | T | 96.4/36.7 |
| Q205 | 1590004750 | S.TRA | LMUN5213T1G <SLVJ> | T | 100.2/36.0 |
| Q206 | 1590000680 | S.TRA | DTC114EUA T106 | T | 113.1/19.4 |
| Q207 | 1590004750 | S.TRA | LMUN5213T1G <SLVJ> | T | 94.7/46.0 |
| Q208 | 1590001330 | S.TRA | DTA114EUA T106 | T | 120.1/68.5 |
| Q209 | 1520000651 | S.TRA | 2SB1201S-TL-E | T | 112.9/59.9 |
| Q210 | 1530002060 | S.TRA | 2SC4081 T106 R | T | 105.4/55.3 |
| Q211 | 1590001330 | S.TRA | DTA114EUA T106 | T | 122.6/65.4 |
| Q501 | 1590000680 | S.TRA | DTC114EUA T106 | T | 86.1/88.9 |
| Q502 | 1590000680 | S.TRA | DTC114EUA T106 | T | 86.1/92.6 |
| Q503 | 1590000680 | S.TRA | DTC114EUA T106 | T | 82.9/90.8 |
| Q504 | 1590001330 | S.TRA | DTA114EUA T106 | T | 89.3/88.9 |
| Q505 | 1590000680 | S.TRA | DTC114EUA T106 | T | 125.1/66.6 |
| Q601 | 1510000501 | S.TRA | 2SA1162-GR(TE85RF) | T | 41.4/85.3 |
| D7 | 1750000520 | S.DIO | DAN222TL | T | 122.5/18.8 |
| D8 | 1160000140 | S.DIO | DAP222 TL | T | 122.5/15.4 |
| D10 | 1730002591 | S.ZEN | MAZ8033GHL | T | 107.5/57.0 |
| D11 | 1790001670 | S.DIO | RB706F-40T106 | T | 121.3/10.7 |
| D12 | 1790001670 | S.DIO | RB706F-40T106 | T | 60.0/31.0 |
| D201 | 1750002170 | S.DIO | DB2S31400L | T | 82.8/38.3 |
| D202 | 1750002170 | S.DIO | DB2S31400L | T | 93.7/38.1 |
| D601 | 1750002020 | S.DIO | DA2S10100L | T | 42.2/82.9 |
| D602 | 1750002020 | S.DIO | DA2S10100L | T | 39.0/85.9 |
| D603 | 1750002020 | S.DIO | DA2S10100L | T | 39.0/83.4 |
| X1 | 6050009870 | S.XTA | CR-567 SMD-49 9.8304 MHz <KDS> | T | 49.7/44.6 |
| L203 | 6200003950 | S.COI | HF50ACC 322513-T | T | 115.2/85.6 |
| L204 | 6200001831 | S.COI | NLV32T-100J | T | 127.0/91.7 |
| L205 | 6200003950 | S.COI | HF50ACC 322513-T | T | 61.2/36.7 |
| L207 | 6200003950 | S.COI | HF50ACC 322513-T | T | 117.5/17.1 |
| L208 | 6200003950 | S.COI | HF50ACC 322513-T | T | 118.4/85.6 |
| L209 | 6200003950 | S.COI | HF50ACC 322513-T | T | 10.0/64.0 |
| L601 | 6200001831 | S.COI | NLV32T-100J | T | 34.8/83.9 |
| R200 | 7030003800 | S.RES | ERJ3GEYJ 105 V (1M) | T | 107.4/37.2 |
| R201 | 7030003680 | S.RES | ERJ3GEYJ 104 V (100K) | T | 110.0/40.4 |
| R202 | 7030003250 | S.RES | ERJ3GEYJ 270 V (27) | T | 81.3/38.3 |
| R203 | 7030003800 | S.RES | ERJ3GEYJ 105 V (1M) | T | 49.7/41.3 |
| R204 | 7030003690 | S.RES | ERJ3GEYJ 124 V (120K) | T | 82.1/36.3 |
| R205 | 7030003520 | S.RES | ERJ3GEYJ 472 V (4.7K) | T | 90.4/38.2 |
| R206 | 7030003250 | S.RES | ERJ3GEYJ 270 V (27) | T | 92.2/38.2 |
| R207 | 7030003570 | S.RES | ERJ3GEYJ 123 V (12K) | T | 93.0/36.2 |
| R208 | 7030003560 | S.RES | ERJ3GEYJ 103 V (10K) | T | 96.5/38.9 |
| R209 | 7030003860 | S.RES | ERJ3GE JPW V | T | 14.6/25.1 |
| R210 | 7030003860 | S.RES | ERJ3GE JPW V | T | 22.0/24.5 |
| R212 | 7030003490 | S.RES | ERJ3GEYJ 272 V (2.7K) | T | 79.4/48.5 |
| R213 | 7030003410 | S.RES | ERJ3GEYJ 561 V (560) | T | 81.0/48.5 |
| R214 | 7030003440 | S.RES | ERJ3GEYJ 102 V (1K) | T | 40.8/13.5 |
| R215 | 7030003440 | S.RES | ERJ3GEYJ 102 V (1K) | T | 39.5/13.5 |
| R216 | 7030003440 | S.RES | ERJ3GEYJ 102 V (1K) | T | 38.2/13.5 |
| R217 | 7030003440 | S.RES | ERJ3GEYJ 102 V (1K) | T | 36.9/13.5 |
| R218 | 7030003440 | S.RES | ERJ3GEYJ 102 V (1K) | T | 35.6/13.5 |
| R219 | 7030003440 | S.RES | ERJ3GEYJ 102 V (1K) | T | 34.3/13.5 |
| R220 | 7030003440 | S.RES | ERJ3GEYJ 102 V (1K) | T | 31.7/13.7 |
| R221 | 7030003440 | S.RES | ERJ3GEYJ 102 V (1K) | T | 33.0/13.5 |
| R222 | 7030003440 | S.RES | ERJ3GEYJ 102 V (1K) | T | 30.6/16.1 |
| R223 | 7030003440 | S.RES | ERJ3GEYJ 102 V (1K) | T | 29.9/13.6 |
| R224 | 7030003440 | S.RES | ERJ3GEYJ 102 V (1K) | T | 29.1/16.1 |
| R225 | 7030003440 | S.RES | ERJ3GEYJ 102 V (1K) | T | 28.3/13.4 |
| R226 | 7030003440 | S.RES | ERJ3GEYJ 102 V (1K) | T | 27.6/16.1 |
| R227 | 7030003440 | S.RES | ERJ3GEYJ 102 V (1K) | T | 26.8/13.4 |
| R228 | 7030003440 | S.RES | ERJ3GEYJ 102 V (1K) | T | 25.5/13.4 |
| R229 | 7030003440 | S.RES | ERJ3GEYJ 102 V (1K) | T | 22.9/13.4 |
| R230 | 7030003440 | S.RES | ERJ3GEYJ 102 V (1K) | T | 24.2/13.4 |
| R232 | 7030003440 | S.RES | ERJ3GEYJ 102 V (1K) | T | 74.2/13.5 |
| R233 | 7030003440 | S.RES | ERJ3GEYJ 102 V (1K) | T | 77.0/13.5 |
| R234 | 7030003440 | S.RES | ERJ3GEYJ 102 V (1K) | T | 75.5/13.5 |
| R235 | 7030003440 | S.RES | ERJ3GEYJ 102 V (1K) | T | 78.3/13.5 |
| R236 | 7030003440 | S.RES | ERJ3GEYJ 102 V (1K) | T | 79.6/13.5 |
| R237 | 7030003440 | S.RES | ERJ3GEYJ 102 V (1K) | T | 80.9/13.5 |
| R238 | 7030003440 | S.RES | ERJ3GEYJ 102 V (1K) | T | 82.2/13.5 |
| R239 | 7030003440 | S.RES | ERJ3GEYJ 102 V (1K) | T | 107.3/86.7 |
| R240 | 7030003440 | S.RES | ERJ3GEYJ 102 V (1K) | T | 106.0/86.8 |
| R241 | 7030003680 | S.RES | ERJ3GEYJ 104 V (100K) | T | 108.7/86.7 |
| R242 | 7030003680 | S.RES | ERJ3GEYJ 104 V (100K) | T | 104.6/86.7 |
| R246 | 7030003440 | S.RES | ERJ3GEYJ 102 V (1K) | T | 59.6/13.3 |
| R247 | 7030003440 | S.RES | ERJ3GEYJ 102 V (1K) | T | 58.3/13.3 |
| R248 | 7030003440 | S.RES | ERJ3GEYJ 102 V (1K) | T | 57.0/13.3 |
| R249 | 7030003440 | S.RES | ERJ3GEYJ 102 V (1K) | T | 55.7/13.3 |
| R250 | 7030003440 | S.RES | ERJ3GEYJ 102 V (1K) | T | 54.4/13.3 |
| R251 | 7030003320 | S.RES | ERJ3GEYJ 101 V (100) | T | 52.9/13.3 |

Eqv.= This component is equivalent to the REF No. component listed above, and may be substituted on parts orders and repairs.

M.=Mounted side (T: Mounted on the Top side, B: Mounted on the Bottom side)
S.=Surface mount

## [DISPLAY UNIT]

| REF NO. | PARTS NO. | DESCRIPTION | M. | H/V LOCATION |
|---|---|---|---|---|
| R252 | 7030003440 | S.RES ERJ3GEYJ 102 V (1K) | T | 51.6/13.3 |
| R253 | 7030003440 | S.RES ERJ3GEYJ 102 V (1K) | T | 50.3/13.3 |
| R254 | 7030003680 | S.RES ERJ3GEYJ 104 V (100K) | T | 48.4/13.3 |
| R255 | 7030003640 | S.RES ERJ3GEYJ 473 V (47K) | T | 12.7/14.2 |
| R256 | 7030003640 | S.RES ERJ3GEYJ 473 V (47K) | T | 16.6/14.2 |
| R257 | 7030003670 | S.RES ERJ3GEYJ 823 V (82K) | T | 14.0/14.2 |
| R258 | 7030003670 | S.RES ERJ3GEYJ 823 V (82K) | T | 15.3/14.2 |
| R259 | 7030003440 | S.RES ERJ3GEYJ 102 V (1K) | T | 12.8/90.2 |
| R260 | 7030003440 | S.RES ERJ3GEYJ 102 V (1K) | T | 19.4/87.2 |
| R261 | 7030003440 | S.RES ERJ3GEYJ 102 V (1K) | T | 10.1/88.5 |
| R262 | 7030003440 | S.RES ERJ3GEYJ 102 V (1K) | T | 7.2/79.9 |
| R263 | 7030003440 | S.RES ERJ3GEYJ 102 V (1K) | T | 18.0/81.9 |
| R264 | 7030003440 | S.RES ERJ3GEYJ 102 V (1K) | T | 7.2/78.6 |
| R265 | 7030003440 | S.RES ERJ3GEYJ 102 V (1K) | T | 18.0/80.6 |
| R266 | 7030003440 | S.RES ERJ3GEYJ 102 V (1K) | T | 7.2/77.3 |
| R267 | 7030003440 | S.RES ERJ3GEYJ 102 V (1K) | T | 18.0/79.3 |
| R268 | 7030003440 | S.RES ERJ3GEYJ 102 V (1K) | T | 7.2/76.0 |
| R269 | 7030003440 | S.RES ERJ3GEYJ 102 V (1K) | T | 18.0/78.0 |
| R270 | 7030003440 | S.RES ERJ3GEYJ 102 V (1K) | T | 7.2/74.7 |
| R271 | 7030003440 | S.RES ERJ3GEYJ 102 V (1K) | T | 18.0/76.7 |
| R272 | 7030003440 | S.RES ERJ3GEYJ 102 V (1K) | T | 7.2/73.4 |
| R273 | 7030003440 | S.RES ERJ3GEYJ 102 V (1K) | T | 7.2/72.1 |
| R274 | 7030003440 | S.RES ERJ3GEYJ 102 V (1K) | T | 18.0/75.4 |
| R275 | 7030003440 | S.RES ERJ3GEYJ 102 V (1K) | T | 7.2/70.8 |
| R276 | 7030003440 | S.RES ERJ3GEYJ 102 V (1K) | T | 18.0/74.1 |
| R278 | 7030003440 | S.RES ERJ3GEYJ 102 V (1K) | T | 13.4/42.7 |
| R279 | 7030003440 | S.RES ERJ3GEYJ 102 V (1K) | T | 4.0/43.9 |
| R280 | 7030003440 | S.RES ERJ3GEYJ 102 V (1K) | T | 13.4/44.0 |
| R281 | 7030003440 | S.RES ERJ3GEYJ 102 V (1K) | T | 4.0/45.2 |
| R282 | 7030003440 | S.RES ERJ3GEYJ 102 V (1K) | T | 13.4/45.3 |
| R283 | 7030003440 | S.RES ERJ3GEYJ 102 V (1K) | T | 4.0/46.5 |
| R284 | 7030003520 | S.RES ERJ3GEYJ 472 V (4.7K) | T | 13.4/46.6 |
| R285 | 7030003440 | S.RES ERJ3GEYJ 102 V (1K) | T | 4.0/47.8 |
| R286 | 7030003440 | S.RES ERJ3GEYJ 102 V (1K) | T | 13.4/47.9 |
| R287 | 7030003440 | S.RES ERJ3GEYJ 102 V (1K) | T | 4.0/49.1 |
| R288 | 7030003440 | S.RES ERJ3GEYJ 102 V (1K) | T | 13.4/49.2 |
| R289 | 7030003440 | S.RES ERJ3GEYJ 102 V (1K) | T | 13.4/50.5 |
| R290 | 7030003440 | S.RES ERJ3GEYJ 102 V (1K) | T | 4.0/51.7 |
| R291 | 7030003440 | S.RES ERJ3GEYJ 102 V (1K) | T | 13.4/51.8 |
| R292 | 7030003440 | S.RES ERJ3GEYJ 102 V (1K) | T | 4.0/53.0 |
| R293 | 7030003440 | S.RES ERJ3GEYJ 102 V (1K) | T | 13.4/54.4 |
| R294 | 7030003440 | S.RES ERJ3GEYJ 102 V (1K) | T | 4.0/55.6 |
| R295 | 7030003440 | S.RES ERJ3GEYJ 102 V (1K) | T | 4.0/58.2 |
| R296 | 7030003440 | S.RES ERJ3GEYJ 102 V (1K) | T | 13.4/58.3 |
| R297 | 7030003440 | S.RES ERJ3GEYJ 102 V (1K) | T | 4.0/60.8 |
| R298 | 7030003440 | S.RES ERJ3GEYJ 102 V (1K) | T | 13.4/59.6 |
| R299 | 7030003440 | S.RES ERJ3GEYJ 102 V (1K) | T | 4.0/50.4 |
| R300 | 7030003440 | S.RES ERJ3GEYJ 102 V (1K) | T | 4.0/63.4 |
| R301 | 7030003440 | S.RES ERJ3GEYJ 102 V (1K) | T | 13.4/62.2 |
| R302 | 7030003560 | S.RES ERJ3GEYJ 103 V (10K) | T | 13.4/60.9 |
| R303 | 7030003560 | S.RES ERJ3GEYJ 103 V (10K) | T | 4.0/62.1 |
| R304 | 7030003560 | S.RES ERJ3GEYJ 103 V (10K) | T | 13.4/57.0 |
| R305 | 7030003560 | S.RES ERJ3GEYJ 103 V (10K) | T | 4.0/59.5 |
| R306 | 7030003560 | S.RES ERJ3GEYJ 103 V (10K) | T | 4.0/56.9 |
| R307 | 7030003560 | S.RES ERJ3GEYJ 103 V (10K) | T | 13.4/55.7 |
| R308 | 7030003560 | S.RES ERJ3GEYJ 103 V (10K) | T | 4.0/54.3 |
| R309 | 7030003560 | S.RES ERJ3GEYJ 103 V (10K) | T | 13.4/53.1 |
| R310 | 7030003440 | S.RES ERJ3GEYJ 102 V (1K) | T | 24.2/32.0 |
| R311 | 7030003440 | S.RES ERJ3GEYJ 102 V (1K) | T | 22.9/32.0 |
| R312 | 7030003440 | S.RES ERJ3GEYJ 102 V (1K) | T | 105.0/9.4 |
| R313 | 7030003440 | S.RES ERJ3GEYJ 102 V (1K) | T | 105.0/10.7 |
| R314 | 7030003440 | S.RES ERJ3GEYJ 102 V (1K) | T | 104.2/12.2 |
| R315 | 7030003440 | S.RES ERJ3GEYJ 102 V (1K) | T | 105.0/6.8 |
| R316 | 7030003440 | S.RES ERJ3GEYJ 102 V (1K) | T | 116.1/13.7 |
| R317 | 7030003440 | S.RES ERJ3GEYJ 102 V (1K) | T | 116.7/8.3 |
| R318 | 7030003440 | S.RES ERJ3GEYJ 102 V (1K) | T | 116.1/11.8 |
| R319 | 7030003440 | S.RES ERJ3GEYJ 102 V (1K) | T | 116.7/9.6 |
| R320 | 7030003440 | S.RES ERJ3GEYJ 102 V (1K) | T | 135.2/23.4 |
| R321 | 7030003440 | S.RES ERJ3GEYJ 102 V (1K) | T | 127.7/20.9 |
| R322 | 7030003440 | S.RES ERJ3GEYJ 102 V (1K) | T | 126.4/20.9 |
| R323 | 7030003560 | S.RES ERJ3GEYJ 103 V (10K) | T | 115.0/18.7 |
| R325 | 7030003380 | S.RES ERJ3GEYJ 331 V (330) | T | 107.0/69.6 |
| R326 | 7030003360 | S.RES ERJ3GEYJ 221 V (220) | T | 107.9/54.4 |
| R327 | 7030003580 | S.RES ERJ3GEYJ 153 V (15K) | T | 103.5/55.2 |
| R328 | 7030003660 | S.RES ERJ3GEYJ 683 V (68K) | T | 103.1/61.2 |
| R329 | 7030003560 | S.RES ERJ3GEYJ 103 V (10K) | T | 38.1/33.4 |
| R330 | 7030003480 | S.RES ERJ3GEYJ 222 V (2.2K) | T | 128.8/54.1 |
| R331 | 7030003640 | S.RES ERJ3GEYJ 473 V (47K) | T | 18.0/84.5 |
| R332 | 7030003640 | S.RES ERJ3GEYJ 473 V (47K) | T | 9.2/84.9 |
| R333 | 7030003640 | S.RES ERJ3GEYJ 473 V (47K) | T | 18.0/83.2 |
| R334 | 7030003640 | S.RES ERJ3GEYJ 473 V (47K) | T | 9.2/83.5 |
| R335 | 7030003670 | S.RES ERJ3GEYJ 823 V (82K) | T | 21.5/84.5 |
| R336 | 7030003670 | S.RES ERJ3GEYJ 823 V (82K) | T | 8.4/86.9 |
| R337 | 7030003670 | S.RES ERJ3GEYJ 823 V (82K) | T | 20.8/83.2 |
| R338 | 7030003670 | S.RES ERJ3GEYJ 823 V (82K) | T | 8.1/81.2 |
| R342 | 7030003640 | S.RES ERJ3GEYJ 473 V (47K) | T | 35.4/38.4 |
| R343 | 7030003640 | S.RES ERJ3GEYJ 473 V (47K) | T | 103.2/57.8 |
| R351 | 7030003440 | S.RES ERJ3GEYJ 102 V (1K) | T | 123.2/70.3 |
| R352 | 7030003440 | S.RES ERJ3GEYJ 102 V (1K) | T | 101.3/80.6 |
| R353 | 7030003440 | S.RES ERJ3GEYJ 102 V (1K) | T | 102.4/75.0 |
| R354 | 7030003440 | S.RES ERJ3GEYJ 102 V (1K) | T | 100.2/78.0 |
| R355 | 7030003440 | S.RES ERJ3GEYJ 102 V (1K) | T | 101.1/75.2 |
| R356 | 7030003440 | S.RES ERJ3GEYJ 102 V (1K) | T | 128.4/78.8 |
| R357 | 7030003440 | S.RES ERJ3GEYJ 102 V (1K) | T | 126.7/72.2 |
| R358 | 7030003440 | S.RES ERJ3GEYJ 102 V (1K) | T | 114.8/75.7 |
| R359 | 7030003440 | S.RES ERJ3GEYJ 102 V (1K) | T | 116.1/75.5 |
| R360 | 7030003440 | S.RES ERJ3GEYJ 102 V (1K) | T | 130.2/77.2 |
| R361 | 7030003440 | S.RES ERJ3GEYJ 102 V (1K) | T | 129.5/74.0 |
| R362 | 7030003440 | S.RES ERJ3GEYJ 102 V (1K) | T | 116.5/79.3 |
| R363 | 7030003440 | S.RES ERJ3GEYJ 102 V (1K) | T | 117.4/75.5 |
| R364 | 7030003640 | S.RES ERJ3GEYJ 473 V (47K) | T | 61.2/29.0 |
| R365 | 7030004730 | S.RES ERJ3GEYF 222 V (2.2K) | T | 62.0/33.0 |

## [DISPLAY UNIT]

| REF NO. | PARTS NO. | DESCRIPTION | M. | H/V LOCATION |
|---|---|---|---|---|
| R366 | 7030003440 | S.RES ERJ3GEYJ 102 V (1K) [USA] | T | 128.5/64.2 |
| | 7030003440 | S.RES ERJ3GEYJ 102 V (1K) [EUR] | | |
| | 7030003440 | S.RES ERJ3GEYJ 102 V (1K) [FRA] | | |
| | 7030003440 | S.RES ERJ3GEYJ 102 V (1K) [ITR] | | |
| | 7030003440 | S.RES ERJ3GEYJ 102 V (1K) [UK] | | |
| R369 | 7030003860 | S.RES ERJ3GE JPW V | T | 55.8/37.5 |
| R370 | 7030003540 | S.RES ERJ3GEYJ 682 V (6.8K) | T | 100.3/38.5 |
| R371 | 7030003860 | S.RES ERJ3GE JPW V | T | 117.5/38.2 |
| R501 | 7030003640 | S.RES ERJ3GEYJ 473 V (47K) | T | 68.5/16.9 |
| R502 | 7030003640 | S.RES ERJ3GEYJ 473 V (47K) | T | 67.2/16.9 |
| R503 | 7030003640 | S.RES ERJ3GEYJ 473 V (47K) | T | 36.2/32.5 |
| R504 | 7030003440 | S.RES ERJ3GEYJ 102 V (1K) | T | 135.4/62.3 |
| R505 | 7030003360 | S.RES ERJ3GEYJ 221 V (220) | T | 89.2/87.0 |
| R601 | 7030003860 | S.RES ERJ3GE JPW V | T | 44.2/89.9 |
| R602 | 7030003520 | S.RES ERJ3GEYJ 472 V (4.7K) | T | 41.6/87.6 |
| R603 | 7030003640 | S.RES ERJ3GEYJ 473 V (47K) | T | 32.4/45.4 |
| R604 | 7030003560 | S.RES ERJ3GEYJ 103 V (10K) | T | 32.4/46.9 |
| R651 | 7030003650 | S.RES ERJ3GEYJ 563 V (56K) | T | 114.9/95.0 |
| R652 | 7030003620 | S.RES ERJ3GEYJ 333 V (33K) | T | 118.6/95.0 |
| R653 | 7030003520 | S.RES ERJ3GEYJ 472 V (4.7K) | T | 44.2/86.1 |
| C8 | 4030011600 | S.CER C1608 JB 1E 104K-T | T | 134.6/74.9 |
| C202 | 4510008800 | S.ELE EEE1EA100SR | T | 82.5/31.5 |
| C203 | 4030007020 | S.CER C1608 CH 1H 120J-T | T | 50.5/40.0 |
| C204 | 4030007020 | S.CER C1608 CH 1H 120J-T | T | 47.9/40.0 |
| C205 | 4030011600 | S.CER C1608 JB 1E 104K-T | T | 27.8/64.4 |
| C206 | 4030011600 | S.CER C1608 JB 1E 104K-T | T | 109.1/80.9 |
| C207 | 4030011600 | S.CER C1608 JB 1E 104K-T | T | 73.3/22.2 |
| C208 | 4030011600 | S.CER C1608 JB 1E 104K-T | T | 109.5/6.1 |
| C209 | 4030011600 | S.CER C1608 JB 1E 104K-T | T | 124.1/79.9 |
| C210 | 4030011600 | S.CER C1608 JB 1E 104K-T | T | 82.2/45.7 |
| C211 | 4030011600 | S.CER C1608 JB 1E 104K-T | T | 105.8/61.2 |
| C212 | 4510008800 | S.ELE EEE1EA100SR | T | 87.1/46.2 |
| C213 | 4510008800 | S.ELE EEE1EA100SR | T | 93.4/31.5 |
| C215 | 4030011600 | S.CER C1608 JB 1E 104K-T | T | 120.9/85.9 |
| C216 | 4030011600 | S.CER C1608 JB 1E 104K-T | T | 62.4/5.7 |
| C217 | 4030011600 | S.CER C1608 JB 1E 104K-T | T | 108.4/83.4 |
| C218 | 4510009150 | S.ELE EEE1EA470WP | T | 99.7/84.9 |
| C219 | 4030006860 | S.CER C1608 JB 1H 102K-T | T | 109.8/83.4 |
| C220 | 4030011600 | S.CER C1608 JB 1E 104K-T | T | 126.2/88.9 |
| C221 | 4030011600 | S.CER C1608 JB 1E 104K-T | T | 101.2/55.2 |
| C222 | 4030011600 | S.CER C1608 JB 1E 104K-T | T | 127.7/15.4 |
| C223 | 4030011600 | S.CER C1608 JB 1E 104K-T | T | 134.7/27.7 |
| C224 | 4030011600 | S.CER C1608 JB 1E 104K-T | T | 48.2/38.2 |
| C225 | 4030011600 | S.CER C1608 JB 1E 104K-T | T | 119.9/61.6 |
| C226 | 4030011600 | S.CER C1608 JB 1E 104K-T | T | 17.3/87.3 |
| C227 | 4030011600 | S.CER C1608 JB 1E 104K-T | T | 120.9/83.0 |
| C228 | 4510008800 | S.ELE EEE1EA100SR | T | 125.5/83.6 |
| C229 | 4030011600 | S.CER C1608 JB 1E 104K-T | T | 7.4/65.1 |
| C230 | 4030006880 | S.CER C1608 JB 1H 472K-T | T | 58.6/29.0 |
| C231 | 4030011600 | S.CER C1608 JB 1E 104K-T | T | 47.6/17.4 |
| C232 | 4030011600 | S.CER C1608 JB 1E 104K-T | T | 58.0/31.2 |
| C233 | 4030011600 | S.CER C1608 JB 1E 104K-T | T | 88.2/37.5 |
| C241 | 4030011600 | S.CER C1608 JB 1E 104K-T | T | 119.0/80.4 |
| C242 | 4030011600 | S.CER C1608 JB 1E 104K-T | T | 116.5/81.2 |
| C243 | 4030011600 | S.CER C1608 JB 1E 104K-T | T | 120.3/80.4 |
| C244 | 4030011600 | S.CER C1608 JB 1E 104K-T | T | 121.2/73.0 |
| C245 | 4030011600 | S.CER C1608 JB 1E 104K-T | T | 128.4/80.1 |
| C246 | 4030011600 | S.CER C1608 JB 1E 104K-T | T | 131.4/74.6 |
| C247 | 4030011600 | S.CER C1608 JB 1E 104K-T | T | 130.2/75.9 |
| C248 | 4030011600 | S.CER C1608 JB 1E 104K-T | T | 124.9/73.0 |
| C249 | 4030011600 | S.CER C1608 JB 1E 104K-T | T | 112.1/6.1 |
| C250 | 4030011600 | S.CER C1608 JB 1E 104K-T | T | 113.5/14.4 |
| C251 | 4030011600 | S.CER C1608 JB 1E 104K-T | T | 112.1/7.4 |
| C252 | 4030011600 | S.CER C1608 JB 1E 104K-T | T | 115.9/7.0 |
| C253 | 4030011600 | S.CER C1608 JB 1E 104K-T | T | 104.2/13.5 |
| C254 | 4030011600 | S.CER C1608 JB 1E 104K-T | T | 109.5/7.4 |
| C255 | 4030011600 | S.CER C1608 JB 1E 104K-T | T | 105.0/8.1 |
| C256 | 4030011600 | S.CER C1608 JB 1E 104K-T | T | 105.0/5.5 |
| C257 | 4030011600 | S.CER C1608 JB 1E 104K-T | T | 72.9/13.5 |
| C258 | 4030011600 | S.CER C1608 JB 1E 104K-T | T | 72.7/16.3 |
| C259 | 4030011600 | S.CER C1608 JB 1E 104K-T | T | 80.2/19.0 |
| C260 | 4030011600 | S.CER C1608 JB 1E 104K-T | T | 72.5/19.5 |
| C261 | 4030011600 | S.CER C1608 JB 1E 104K-T | T | 76.5/28.2 |
| C262 | 4030011600 | S.CER C1608 JB 1E 104K-T | T | 75.2/28.2 |
| C263 | 4030011600 | S.CER C1608 JB 1E 104K-T | T | 73.3/27.4 |
| C264 | 4030011600 | S.CER C1608 JB 1E 104K-T | T | 72.6/25.5 |
| C265 | 4030011600 | S.CER C1608 JB 1E 104K-T | T | 21.0/52.4 |
| C266 | 4030011600 | S.CER C1608 JB 1E 104K-T | T | 28.5/62.5 |
| C267 | 4030011600 | S.CER C1608 JB 1E 104K-T | T | 21.6/55.8 |
| C268 | 4030011600 | S.CER C1608 JB 1E 104K-T | T | 21.6/57.1 |
| C601 | 4510008800 | S.ELE EEE1EA100SR | T | 29.5/86.2 |
| C602 | 4030011600 | S.CER C1608 JB 1E 104K-T | T | 39.2/41.9 |
| C651 | 4030008890 | S.CER C1608 JB 1H 273K-T | T | 47.9/93.5 |
| C652 | 4030011600 | S.CER C1608 JB 1E 104K-T | T | 50.4/92.0 |
| J1 | 6510021722 | S.CON 30FLT-SM2-TB(LF)(SN)(M) | T | 13.3/80.8 |
| J2 | 6510021722 | S.CON 30FLT-SM2-TB(LF)(SN)(M) | T | 8.7/52.4 |
| J3 | 6510022472 | S.CON 40FLT-SM2-TB(LF)(SN)(M) | T | 131.6/62.8 |
| J4 | 6510020531 | S.CON 52808-1871 | T | 30.8/8.8 |
| J5 | 6510019971 | S.CON 52808-1071 | T | 77.8/8.8 |
| J6 | 6510021722 | S.CON 30FLT-SM2-TB(LF)(SN)(M) | T | 130.9/21.4 |
| J7 | 6510019971 | S.CON 52808-1071 | T | 55.5/8.8 |
| J201 | 6510022472 | S.CON 40FLT-SM2-TB(LF)(SN)(M) | T | 6.2/28.7 |
| J202 | 6510022472 | S.CON 40FLT-SM2-TB(LF)(SN)(M) | T | 18.2/28.7 |
| J203 | 6510020081 | S.CON 52808-2071(2090) | T | 113.5/91.3 |
| J205 | 6510003401 | CON B04B-EH-S(LF)(SN) | | |
| J301 | 6510018971 | S.CON B4B-PH-SM4-TB(LF)(SN) | T | 130.7/38.9 |
| J302 | 6510022191 | S.CON B3B-PH-SM4-TB(LF)(SN) | T | 94.3/7.5 |
| J601 | 6510021861 | CON BH-800.4GG <LTC> | | |
| BT601 | 3020000110 | LIT CR-2032L/BK | | |

Eqv.= This component is equivalent to the REF No. component listed above, and may be substituted on parts orders and repairs.

M.=Mounted side (T: Mounted on the Top side, B: Mounted on the Bottom side)
S.=Surface mount

## [RXPLL-A UNIT]

| REF NO. | PARTS NO. | DESCRIPTION | M. | H/V LOCATION |
|---|---|---|---|---|
| IC1 | 1130011530 | S.IC CD74HC4094M96 | T | 11.9/24.1 |
| IC2 | 1130009691 | S.IC TC74HCT7007AF(F) | T | 22.8/23.3 |
| IC51 | 1180001252 | S.IC TA7808F(TE16L1NQ) | T | 77.0/16.7 |
| IC61 | 1180000421 | S.IC TA78L05F(TE12RF) | B | 56.5/16.0 |
| IC101 | 1140007881 | S.IC TC190G08EFG0046JDZ/SC1246A | T | 31.3/89.7 |
| IC102 | 1130003831 | S.IC TC7S04F(TE85RF) | T | 33.1/74.7 |
| IC103 | 1130006441 | S.IC TC7S08F(TE85RF) | B | 34.0/92.1 |
| IC104 | 1130003831 | S.IC TC7S04F(TE85RF) | T | 31.8/101.1 |
| IC201 | 1130009230 | S.IC LMX2306TMX/NOPB | T | 27.9/38.8 |
| IC501 | 1140007881 | S.IC TC190G08EFG0046JDZ/SC1246A | T | 31.3/142.5 |
| IC502 | 1130003831 | S.IC TC7S04F(TE85RF) | T | 24.8/127.4 |
| IC503 | 1130003831 | S.IC TC7S04F(TE85RF) | T | 31.7/154.1 |
| IC602 | 1130006441 | S.IC TC7S08F(TE85RF) | B | 50.7/113.4 |
| IC651 | 1140014960 | S.IC TC190G02EFG-0058/SC1287A | T | 22.6/169.2 |
| IC652 | 1130003831 | S.IC TC7S04F(TE85RF) | T | 13.8/163.8 |
| IC1051 | 1190002010 | S.IC SD5400CY <TOMO> | T | 176.9/99.9 |
| IC1081 | 1110006180 | S.IC UPG2009TB-E3 | B | 151.7/85.1 |
| IC1402 | 1190002110 | S.IC NJG1519KC1-TE3-#ZZZB | T | 117.4/69.6 |
| IC1403 | 1190002110 | S.IC NJG1519KC1-TE3-#ZZZB | T | 113.5/106.3 |
| IC1501 | 1110006121 | S.IC DBM9A41-G-TR | T | 121.2/124.5 |
| IC1502 | 1110006121 | S.IC DBM9A41-G-TR | T | 121.2/133.0 |
| IC1503 | 1110006100 | S.IC NJM5534MD-TE1-#ZZZB | T | 138.4/151.7 |
| IC1504 | 1110006100 | S.IC NJM5534MD-TE1-#ZZZB | T | 119.2/151.7 |
| IC1505 | 1110006190 | S.IC NJM074M-TE1-#ZZZB | T | 128.8/166.9 |
| IC1506 | 1110006100 | S.IC NJM5534MD-TE1-#ZZZB | T | 128.8/175.6 |
| IC1651 | 1130011921 | S.IC TC74LCX00F(ELF) | T | 110.0/126.2 |
| IC1652 | 1110005420 | S.IC BA15532F-E2 | T | 139.8/175.6 |
| IC1653 | 1110005100 | S.IC NJM072BM-TE1-#ZZZB | B | 140.0/172.0 |
| IC1701 | 1130011530 | S.IC CD74HC4094M96 | T | 158.0/166.7 |
| IC1702 | 1130011530 | S.IC CD74HC4094M96 | T | 148.9/166.7 |
| IC1703 | 1160000132 | S.IC TD62783AFG(OSEL) | T | 157.3/154.8 |
| IC1704 | 1180000790 | S.IC AN78L10M(E1) | B | 183.3/159.9 |
| Q1 | 1590001050 | S.TRA DTC114TUA T106 | B | 30.3/22.6 |
| Q30 | 1530002060 | S.TRA 2SC4081 T106 R | T | 22.3/110.9 |
| Q41 | 1590000680 | S.TRA DTC114EUA T106 | T | 12.8/34.2 |
| Q150 | 1560000331 | S.FET 2SK210-GR(TE85RF) | T | 26.9/53.0 |
| Q151 | 1530002280 | S.TRA 2SC4081 T106 S | B | 33.6/57.2 |
| Q152 | 1530002280 | S.TRA 2SC4081 T106 S | B | 30.8/78.2 |
| Q201 | 1590001330 | S.TRA DTA114EUA T106 | T | 29.6/34.1 |
| Q220 | 1560000331 | S.FET 2SK210-GR(TE85RF) | T | 72.5/33.9 |
| Q230 | 1560000331 | S.FET 2SK210-GR(TE85RF) | T | 72.5/46.4 |
| Q240 | 1560000331 | S.FET 2SK210-GR(TE85RF) | T | 72.5/58.9 |
| Q250 | 1560000331 | S.FET 2SK210-GR(TE85RF) | T | 72.5/71.4 |
| Q260 | 1560000331 | S.FET 2SK210-GR(TE85RF) | T | 72.5/83.9 |
| Q270 | 1560000331 | S.FET 2SK210-GR(TE85RF) | T | 72.5/95.8 |
| Q280 | 1590000680 | S.TRA DTC114EUA T106 | T | 82.3/34.4 |
| Q281 | 1590000680 | S.TRA DTC114EUA T106 | T | 82.3/46.9 |
| Q282 | 1590000680 | S.TRA DTC114EUA T106 | T | 82.3/59.4 |
| Q283 | 1590000680 | S.TRA DTC114EUA T106 | T | 82.3/71.9 |
| Q284 | 1590000680 | S.TRA DTC114EUA T106 | T | 82.3/84.4 |
| Q285 | 1590000680 | S.TRA DTC114EUA T106 | T | 82.3/96.4 |
| Q301 | 1530003432 | S.TRA 2SC5226A-4-TL-E | T | 92.1/30.1 |
| Q302 | 1530003432 | S.TRA 2SC5226A-4-TL-E | B | 89.1/42.5 |
| Q303 | 1530003432 | S.TRA 2SC5226A-4-TL-E | B | 91.4/25.2 |
| Q341 | 1590000680 | S.TRA DTC114EUA T106 | T | 86.4/36.7 |
| Q351 | 1580000751 | S.FET 3SK294(TE85LF) | T | 92.1/56.9 |
| Q352 | 1530003432 | S.TRA 2SC5226A-4-TL-E | B | 89.2/64.5 |
| Q363 | 1590000680 | S.TRA DTC114EUA T106 | T | 86.8/54.3 |
| Q364 | 1590001330 | S.TRA DTA114EUA T106 | T | 86.8/57.4 |
| Q421 | 1590000680 | S.TRA DTC114EUA T106 | B | 96.2/91.6 |
| Q422 | 1590000680 | S.TRA DTC114EUA T106 | B | 92.6/91.6 |
| Q441 | 1590000680 | S.TRA DTC114EUA T106 | T | 86.5/73.7 |
| Q502 | 1590000680 | S.TRA DTC114EUA T106 | T | 41.9/128.8 |
| Q540 | 1530002060 | S.TRA 2SC4081 T106 R | B | 58.7/141.2 |
| Q541 | 1560000331 | S.FET 2SK210-GR(TE85RF) | T | 68.9/142.8 |
| Q561 | 1530003432 | S.TRA 2SC5226A-4-TL-E | T | 70.6/153.8 |
| Q580 | 1530003432 | S.TRA 2SC5226A-4-TL-E | T | 41.7/147.4 |
| Q591 | 1530003151 | S.TRA 2SC4673D-TD-E | T | 61.7/166.5 |
| Q592 | 1520000561 | S.TRA 2SB1123 T-TD-E | B | 52.0/165.3 |
| Q593 | 1590000680 | S.TRA DTC114EUA T106 | B | 54.8/171.2 |
| Q680 | 1530002060 | S.TRA 2SC4081 T106 R | T | 37.5/163.2 |
| Q702 | 1530002601 | S.TRA 2SC4215-O(TE85RF) | T | 31.4/110.9 |
| Q801 | 1560000561 | S.FET 2SK882-GR(TE85LF) | T | 82.8/147.3 |
| Q811 | 1560000561 | S.FET 2SK882-GR(TE85LF) | T | 77.4/177.6 |
| Q831 | 1560000561 | S.FET 2SK882-GR(TE85LF) | T | 88.7/155.1 |
| Q832 | 1520000561 | S.TRA 2SB1123 T-TD-E | B | 77.9/167.1 |
| Q833 | 1590000680 | S.TRA DTC114EUA T106 | B | 73.5/162.5 |
| Q1001 | 1530003852 | S.TRA 2SC5551A-F-TD-E | B | 174.0/9.0 |
| Q1004 | 1590001960 | S.TRA XP4311(TX) | T | 150.0/18.8 |
| Q1005 | 1590001960 | S.TRA XP4311(TX) | T | 145.9/18.8 |
| Q1006 | 1530003852 | S.TRA 2SC5551A-F-TD-E | B | 150.0/37.6 |
| Q1007 | 1530003852 | S.TRA 2SC5551A-F-TD-E | B | 176.5/42.6 |
| Q1008 | 1530003852 | S.TRA 2SC5551A-F-TD-E | B | 160.5/42.5 |
| Q1101 | 1530003860 | TRA 2SC3950D | | |
| Q1102 | 1590000680 | S.TRA DTC114EUA T106 | T | 165.5/133.8 |
| Q1103 | 1520000561 | S.TRA 2SB1123 T-TD-E | B | 168.6/127.8 |
| Q1104 | 1530003860 | TRA 2SC3950D | | |
| Q1105 | 1530003842 | S.TRA 2SC5501A-4-TR-E | T | 166.5/142.1 |
| Q1205 | 1590001960 | S.TRA XP4311(TX) | T | 158.8/55.6 |
| Q1209 | 1530003852 | S.TRA 2SC5551A-F-TD-E | B | 121.1/34.9 |
| Q1210 | 1530003852 | S.TRA 2SC5551A-F-TD-E | B | 111.6/34.9 |
| Q1211 | 1560001311 | S.FET MMBFU310LT1G | T | 159.5/96.4 |
| Q1212 | 1560001311 | S.FET MMBFU310LT1G | T | 153.5/96.4 |
| Q1213 | 1590000680 | S.TRA DTC114EUA T106 | B | 156.9/123.8 |
| Q1214 | 1520000561 | S.TRA 2SB1123 T-TD-E | B | 155.4/113.6 |
| Q1301 | 1530003151 | S.TRA 2SC4673D-TD-E | T | 157.8/120.0 |
| Q1352 | 1530003852 | S.TRA 2SC5551A-F-TD-E | B | 140.1/66.8 |
| Q1401 | 1530003842 | S.TRA 2SC5501A-4-TR-E | T | 131.9/105.8 |
| Q1402 | 1530003021 | S.TRA 2SC4402-3-TL-E | T | 123.4/111.8 |
| Q1403 | 1530003021 | S.TRA 2SC4402-3-TL-E | T | 123.4/114.3 |
| Q1501 | 1530003451 | S.TRA 2SC4835GRL | T | 133.5/143.5 |
| Q1502 | 1530003451 | S.TRA 2SC4835GRL | T | 120.4/143.5 |
| Q1651 | 1530002601 | S.TRA 2SC4215-O(TE85RF) | B | 105.7/140.4 |

## [RXPLL-A UNIT]

| REF NO. | PARTS NO. | DESCRIPTION | M. | H/V LOCATION |
|---|---|---|---|---|
| Q1701 | 1590001960 | S.TRA XP4311(TX) | T | 106.6/43.9 |
| Q1702 | 1590001960 | S.TRA XP4311(TX) | T | 148.9/147.2 |
| Q1703 | 1590001960 | S.TRA XP4311(TX) | T | 146.4/147.2 |
| D101 | 1750000520 | S.DIO DAN222TL | T | 41.8/86.2 |
| D152 | 1720000590 | S.VAR MA357(TX) | T | 17.6/59.9 |
| D153 | 1790000491 | S.DIO HSM88ASTR-E | T | 27.2/60.4 |
| D154 | 1790000491 | S.DIO HSM88ASTR-E | T | 27.2/63.8 |
| D201 | 1750000520 | S.DIO DAN222TL | T | 32.4/34.1 |
| D220 | 1720000590 | S.VAR MA357(TX) | T | 50.8/31.8 |
| D221 | 1720000590 | S.VAR MA357(TX) | T | 52.9/31.8 |
| D222 | 1790000620 | S.DIO MA77(TX) | T | 82.6/29.8 |
| D230 | 1720000590 | S.VAR MA357(TX) | T | 50.8/44.2 |
| D231 | 1720000590 | S.VAR MA357(TX) | T | 52.9/44.2 |
| D232 | 1790000620 | S.DIO MA77(TX) | T | 82.6/42.3 |
| D240 | 1720000590 | S.VAR MA357(TX) | T | 50.8/56.7 |
| D241 | 1720000590 | S.VAR MA357(TX) | T | 52.9/56.7 |
| D242 | 1790000620 | S.DIO MA77(TX) | T | 82.6/54.8 |
| D250 | 1720000590 | S.VAR MA357(TX) | T | 50.8/69.2 |
| D252 | 1790000620 | S.DIO MA77(TX) | T | 82.6/67.3 |
| D261 | 1720000590 | S.VAR MA357(TX) | T | 52.9/81.7 |
| D262 | 1790000620 | S.DIO MA77(TX) | T | 82.6/79.8 |
| D270 | 1720000590 | S.VAR MA357(TX) | T | 50.8/94.2 |
| D271 | 1720000590 | S.VAR MA357(TX) | T | 52.4/96.8 |
| D272 | 1790000620 | S.DIO MA77(TX) | T | 82.5/92.0 |
| D341 | 1790000620 | S.DIO MA77(TX) | T | 90.1/37.2 |
| D342 | 1750000520 | S.DIO DAN222TL [USA] | B | 81.1/47.7 |
| | 1160000070 | S.DIO DAN202K T146 [EUR] | | |
| | 1160000070 | S.DIO DAN202K T146 [UK] | | |
| D362 | 1790000620 | S.DIO MA77(TX) | T | 88.3/65.5 |
| D363 | 1790000620 | S.DIO MA77(TX) | T | 88.3/62.0 |
| D421 | 1790000620 | S.DIO MA77(TX) | T | 92.0/85.0 |
| D422 | 1790000620 | S.DIO MA77(TX) | T | 88.6/85.0 |
| D423 | 1790000620 | S.DIO MA77(TX) | T | 92.5/91.2 |
| D424 | 1790000620 | S.DIO MA77(TX) | T | 88.9/91.2 |
| D441 | 1790000620 | S.DIO MA77(TX) | T | 89.7/74.5 |
| D501 | 1750000520 | S.DIO DAN222TL | T | 42.0/132.0 |
| D542 | 1720000590 | S.VAR MA357(TX) | T | 62.5/139.6 |
| D821 | 1750000431 | S.DIO HSB88WSTR-E | T | 84.1/169.4 |
| D1001 | 1750000581 | S.DIO 1SV307(TPH3F) | T | 181.9/65.7 |
| D1101 | 1790000620 | S.DIO MA77(TX) | T | 177.6/146.6 |
| D1102 | 1790000620 | S.DIO MA77(TX) | T | 177.6/148.4 |
| D1201 | 1750000581 | S.DIO 1SV307(TPH3F) | T | 139.1/57.8 |
| D1351 | 1750000581 | S.DIO 1SV307(TPH3F) | T | 140.9/71.2 |
| D1653 | 1750000550 | S.DIO 1SS355 TE-17 | T | 138.9/167.2 |
| D1654 | 1750000550 | S.DIO 1SS355 TE-17 | T | 142.5/167.2 |
| D1701 | 1790001670 | S.DIO RB706F-40T106 | T | 170.5/160.8 |
| FI101 | 2020001820 | S.CER SFECV10M5FA00-R0 (SFECV10.5MA5S) | T | 26.0/73.9 |
| FI831 | 2030000300 | S.MON DSF753SBF 64.491 MHz (FL-356) | T | 91.6/162.1 |
| FI1401 | 2030000920 | S.MON DSF753SDF 64.455 MHz (FL-364B) | T | 116.3/88.6 |
| FI1402 | 2030000331 | S.MON DSF753SDF 64.455 MHz (FL-358A) | T | 107.0/88.6 |
| FI1403 | 2030000510 | S.MON DSF753SDF 64.455 MHz (FL-396) | T | 126.0/85.5 |
| L1 | 6200003261 | S.COI NLV32T-101J | T | 10.8/15.4 |
| L2 | 6200003261 | S.COI NLV32T-101J | T | 29.0/19.9 |
| L10 | 6200003950 | S.COI HF50ACC 322513-T | T | 38.6/14.7 |
| L11 | 6200003950 | S.COI HF50ACC 322513-T | T | 13.8/15.4 |
| L12 | 6200003950 | S.COI HF50ACC 322513-T | T | 16.8/15.4 |
| L13 | 6200003950 | S.COI HF50ACC 322513-T | T | 29.0/15.4 |
| L20 | 6200003321 | S.COI NLV32T-3R3J | T | 86.0/123.9 |
| L30 | 6200005491 | S.COI NLV32T-331J | T | 20.6/120.0 |
| L101 | 6200001831 | S.COI NLV32T-100J | T | 38.3/72.8 |
| L151 | 6130002970 | COI LB-343 | | |
| L152 | 6200001831 | S.COI NLV32T-100J | T | 30.0/54.5 |
| L201 | 6200005011 | S.COI NLV25T-100J | T | 112.0/85.8 |
| L220 | 6200010790 | S.COI C2520C-3R9G-A | T | 51.9/37.5 |
| L221 | 6190001421 | COI #E526GN-110502 | | |
| L222 | 6200010790 | S.COI C2520C-3R9G-A | T | 76.2/37.7 |
| L230 | 6200010830 | S.COI C2520C-3R3G-A | T | 51.9/50.0 |
| L231 | 6190001421 | COI #E526GN-110502 | | |
| L232 | 6200010830 | S.COI C2520C-3R3G-A | T | 76.2/50.2 |
| L240 | 6200010830 | S.COI C2520C-3R3G-A | T | 51.9/62.5 |
| L241 | 6190001421 | COI #E526GN-110502 | | |
| L242 | 6200010830 | S.COI C2520C-3R3G-A | T | 76.2/62.7 |
| L250 | 6200010820 | S.COI C2520C-2R7G-A | T | 51.9/74.9 |
| L251 | 6190001421 | COI #E526GN-110502 | | |
| L252 | 6200010820 | S.COI C2520C-2R7G-A | T | 76.2/75.2 |
| L260 | 6200010820 | S.COI C2520C-2R7G-A | T | 51.9/87.5 |
| L261 | 6190001411 | COI #E526GN-110501 | | |
| L262 | 6200010820 | S.COI C2520C-2R7G-A | T | 76.2/87.7 |
| L270 | 6200010810 | S.COI C2520C-2R2G-A | T | 51.9/99.8 |
| L271 | 6190001411 | COI #E526GN-110501 | | |
| L272 | 6200010810 | S.COI C2520C-2R2G-A | T | 76.0/100.2 |
| L280 | 6200005011 | S.COI NLV25T-100J | T | 67.4/25.5 |
| L302 | 6200001831 | S.COI NLV32T-100J | T | 89.4/42.7 |
| L331 | 6200002641 | S.COI NLV25T-R15J | T | 95.1/34.1 |
| L332 | 6200002411 | S.COI NLV25T-056J | B | 93.2/36.0 |
| L341 | 6200003261 | S.COI NLV32T-101J | T | 87.1/39.7 |
| L351 | 6200001831 | S.COI NLV32T-100J | T | 91.3/62.1 |
| L421 | 6200008641 | S.COI NLV32T-391J | T | 87.1/81.0 |
| L441 | 6200002601 | S.COI NLV25T-047J | T | 91.9/72.4 |
| L442 | 6200010730 | S.COI C2520C-68NG-A | T | 90.6/78.2 |
| L451 | 6200002641 | S.COI NLV25T-R15J | T | 95.0/81.0 |
| L452 | 6200003261 | S.COI NLV32T-101J | T | 87.1/78.0 |
| L501 | 6200001831 | S.COI NLV32T-100J | T | 31.0/125.8 |
| L530 | 6200003171 | S.COI NLV32T-330J | T | 14.6/134.9 |

Eqv.= This component is equivalent to the REF No. component listed above, and may be substituted on parts orders and repairs.

M.=Mounted side (T: Mounted on the Top side, B: Mounted on the Bottom side)
S.=Surface mount

## [RXPLL-A UNIT]

| REF NO. | PARTS NO. | DESCRIPTION | M. | H/V LOCATION |
|---|---|---|---|---|
| L531 | 6200003171 | S.COI NLV32T-330J | T | 14.6/130.8 |
| L532 | 6200003171 | S.COI NLV32T-330J | T | 15.5/127.1 |
| L541 | 6200010790 | S.COI C2520C-3R9G-A | T | 56.3/139.6 |
| L542 | 6190001421 | COI #E526GN-110502 | | |
| L543 | 6200010790 | S.COI C2520C-3R9G-A | T | 68.5/147.9 |
| L544 | 6200003261 | S.COI NLV32T-101J | B | 65.9/142.1 |
| L545 | 6200003261 | S.COI NLV32T-101J | B | 51.3/139.6 |
| L561 | 6200003261 | S.COI NLV32T-101J | B | 64.0/156.0 |
| L562 | 6200001831 | S.COI NLV32T-100J | B | 74.7/151.9 |
| L565 | 6150004250 | COI LS-471A (C-14922) | | |
| L566 | 6150004250 | COI LS-471A (C-14922) | | |
| L591 | 6200007790 | S.COI LQW2BHNR15J03L | T | 60.5/171.5 |
| L681 | 6200005491 | S.COI NLV32T-331J | B | 77.4/6.3 |
| L682 | 6200008641 | S.COI NLV32T-391J | B | 80.4/3.9 |
| L701 | 6200003261 | S.COI NLV32T-101J | T | 23.6/120.0 |
| L702 | 6150004971 | S.COI LS-522-LF | T | 37.6/108.6 |
| L703 | 6150004971 | S.COI LS-522-LF | T | 37.5/118.5 |
| L801 | 6150004280 | COI LS-484B (C-14927) | | |
| L821 | 6140003530 | COI LR-395 | | |
| L822 | 6140003530 | COI LR-395 | | |
| L831 | 6140003770 | S.COI LR-414 4KBL (STP-01435) | T | 91.6/171.6 |
| L834 | 6150004280 | COI LS-484B (C-14927) | | |
| L1001 | 6190001650 | COI ELC06D102E | | |
| L1002 | 6140004400 | COI LR-499 | | |
| L1004 | 6140003890 | COI LR-488 | | |
| L1005 | 6180001000 | COI LAL 04NA 102K | | |
| L1006 | 6140003900 | COI LR-489 | | |
| L1007 | 6140003800 | COI LR-439 | | |
| L1008 | 6190001650 | COI ELC06D102E | | |
| L1009 | 6190001650 | COI ELC06D102E | | |
| L1010 | 6140003880 | COI LR-486 | | |
| L1011 | 6140003880 | COI LR-486 | | |
| L1012 | 6140003800 | COI LR-439 | | |
| L1013 | 6200010680 | S.COI C2520C-R22G-A (0.22U) | T | 155.0/55.2 |
| L1014 | 6200010680 | S.COI C2520C-R22G-A (0.22U) | T | 158.0/12.5 |
| L1015 | 6200007790 | S.COI LQW2BHNR15J03L | B | 163.6/27.5 |
| L1052 | 6200010740 | S.COI C2520C-R27G-A | T | 177.8/74.6 |
| L1053 | 6200010740 | S.COI C2520C-R27G-A | T | 173.8/73.5 |
| L1054 | 6200010740 | S.COI C2520C-R27G-A | T | 169.4/72.6 |
| L1055 | 6140003960 | COI LR-495 | | |
| L1056 | 6200010730 | S.COI C2520C-68NG-A | T | 171.0/83.8 |
| L1058 | 6190001631 | COI #E544EN-100021 | | |
| L1060 | 6200010730 | S.COI C2520C-68NG-A | T | 149.1/76.4 |
| L1062 | 6200011450 | S.COI C2520C-R39G-A | T | 145.1/81.5 |
| L1063 | 6200010650 | S.COI C2520C-R12G-A (0.12U) | T | 141.0/82.6 |
| L1071 | 6200007780 | S.COI LQW2BHNR12J03L | B | 164.9/79.2 |
| L1072 | 6200007780 | S.COI LQW2BHNR12J03L | B | 168.0/76.1 |
| L1091 | 6200003950 | S.COI HF50ACC 322513-T | B | 171.1/149.0 |
| L1092 | 6200003950 | S.COI HF50ACC 322513-T | T | 149.8/136.5 |
| L1093 | 6200003950 | S.COI HF50ACC 322513-T | T | 157.0/135.2 |
| L1101 | 6140003920 | COI LR-491 | | |
| L1102 | 6200010650 | S.COI C2520C-R12G-A (0.12U) | T | 176.9/117.9 |
| L1103 | 6180001250 | COI LAL 04NA 3R3K | | |
| L1104 | 6200010870 | S.COI C2520C-R33G-A (0.33U) | T | 178.4/135.9 |
| L1105 | 6140003910 | COI LR-490 | | |
| L1151 | 6140004640 | COI LR-519 | | |
| L1201 | 6200007780 | S.COI LQW2BHNR12J03L | B | 119.4/17.5 |
| L1208 | 6140003800 | COI LR-439 | | |
| L1209 | 6200001831 | S.COI NLV32T-100J | T | 121.1/20.8 |
| L1210 | 6140004440 | COI LR-503 | | |
| L1211 | 6200009690 | S.COI LQH43CN101K03L | T | 115.7/34.6 |
| L1212 | 6200001831 | S.COI NLV32T-100J | T | 106.8/20.8 |
| L1213 | 6140004440 | COI LR-503 | | |
| L1214 | 6200009690 | S.COI LQH43CN101K03L | T | 105.9/34.8 |
| L1216 | 6140003800 | COI LR-439 | | |
| L1217 | 6200007750 | S.COI LQW2BHN56NJ03L | T | 148.0/63.8 |
| L1218 | 6200007770 | S.COI LQW2BHNR10J03L | T | 153.3/65.2 |
| L1219 | 6200007790 | S.COI LQW2BHNR15J03L | T | 153.3/68.5 |
| L1220 | 6140000930 | COI LR-116 | | |
| L1221 | 6200003261 | S.COI NLV32T-101J | B | 149.6/110.9 |
| L1222 | 6150005460 | COI LS-559 7K7 | | |
| L1223 | 6200007750 | S.COI LQW2BHN56NJ03L | B | 151.3/100.8 |
| L1228 | 6200010870 | S.COI C2520C-R33G-A (0.33U) | T | 158.8/71.4 |
| L1229 | 6200003950 | S.COI HF50ACC 322513-T | B | 164.7/115.0 |
| L1301 | 6200008090 | S.COI LQW2BHN68NJ03L | T | 157.2/111.9 |
| L1302 | 6200008090 | S.COI LQW2BHN68NJ03L | T | 156.4/115.5 |
| L1303 | 6200008090 | S.COI LQW2BHN68NJ03L | T | 153.4/117.5 |
| L1304 | 6200010870 | S.COI C2520C-R33G-A (0.33U) | T | 153.8/123.0 |
| L1305 | 6200003001 | S.COI NLV32T-R22J | T | 159.2/124.5 |
| L1306 | 6200001831 | S.COI NLV32T-100J | B | 152.8/118.7 |
| L1307 | 6200003001 | S.COI NLV32T-R22J | T | 153.4/112.0 |
| L1351 | 6200001831 | S.COI NLV32T-100J | T | 143.0/76.4 |
| L1353 | 6200010740 | S.COI C2520C-R27G-A | T | 141.6/67.6 |
| L1354 | 6200001831 | S.COI NLV32T-100J | T | 136.5/68.1 |
| L1401 | 6150004280 | COI LS-484B (C-14927) | | |
| L1402 | 6150004280 | COI LS-484B (C-14927) | | |
| L1403 | 6150004280 | COI LS-484B (C-14927) | | |
| L1404 | 6150004280 | COI LS-484B (C-14927) | | |
| L1405 | 6200007770 | S.COI LQW2BHNR10J03L | B | 112.5/111.4 |
| L1406 | 6200007750 | S.COI LQW2BHN56NJ03L | B | 116.6/111.4 |
| L1407 | 6140003930 | COI LR-492 | | |
| L1408 | 6190001621 | COI #E544EN-100028 | | |
| L1409 | 6200003191 | S.COI NLV32T-470J | B | 135.8/125.4 |
| L1410 | 6150004280 | COI LS-484B (C-14927) | | |
| L1411 | 6150004280 | COI LS-484B (C-14927) | | |
| L1501 | 6200003520 | S.COI ELJFB 102K-F | T | 142.1/145.1 |
| L1652 | 6200002520 | S.COI ELJNC R18K-F | T | 112.9/133.1 |
| L1653 | 6200001831 | S.COI NLV32T-100J | B | 105.4/124.6 |
| L1654 | 6200001831 | S.COI NLV32T-100J | B | 112.4/141.9 |
| L1655 | 6200001831 | S.COI NLV32T-100J | B | 124.7/139.8 |
| L1701 | 6200001831 | S.COI NLV32T-100J | T | 167.0/160.0 |
| L1702 | 6200003950 | S.COI HF50ACC 322513-T | T | 175.6/169.8 |
| L1703 | 6200003950 | S.COI HF50ACC 322513-T | T | 172.6/169.8 |
| L1704 | 6200003950 | S.COI HF50ACC 322513-T | T | 169.6/169.8 |
| L1705 | 6200003950 | S.COI HF50ACC 322513-T | T | 165.5/169.8 |

## [RXPLL-A UNIT]

| REF NO. | PARTS NO. | DESCRIPTION | M. | H/V LOCATION |
|---|---|---|---|---|
| L1803 | 6200003950 | S.COI HF50ACC 322513-T | B | 132.1/54.8 |
| L1804 | 6200003950 | S.COI HF50ACC 322513-T | B | 118.0/154.8 |
| L1805 | 6200003950 | S.COI HF50ACC 322513-T | B | 155.2/132.0 |
| L1807 | 6200003950 | S.COI HF50ACC 322513-T | B | 118.0/151.3 |
| L1808 | 6200003950 | S.COI HF50ACC 322513-T | B | 141.3/162.0 |
| L1809 | 6200003950 | S.COI HF50ACC 322513-T | B | 149.6/115.6 |
| R1 | 7030005871 | S.RES ERA3YKD 104V (100K) | T | 32.5/19.2 |
| R2 | 7030005321 | S.RES ERA3YED 103V (10K) | T | 31.2/19.2 |
| R3 | 7030003550 | S.RES ERJ3GEYJ 822 V (8.2K) | T | 16.9/23.5 |
| R4 | 7030003550 | S.RES ERJ3GEYJ 822 V (8.2K) | T | 16.9/24.8 |
| R5 | 7030003550 | S.RES ERJ3GEYJ 822 V (8.2K) | T | 13.3/31.3 |
| R6 | 7030003550 | S.RES ERJ3GEYJ 822 V (8.2K) | T | 13.3/30.0 |
| R7 | 7030003500 | S.RES ERJ3GEYJ 332 V (3.3K) | B | 26.8/13.0 |
| R8 | 7030003470 | S.RES ERJ3GEYJ 182 V (1.8K) | B | 28.2/14.7 |
| R9 | 7030003680 | S.RES ERJ3GEYJ 104 V (100K) | B | 27.5/10.6 |
| R10 | 7030003360 | S.RES ERJ3GEYJ 221 V (220) | T | 19.0/16.0 |
| R11 | 7030003360 | S.RES ERJ3GEYJ 221 V (220) | T | 20.3/16.0 |
| R12 | 7030003360 | S.RES ERJ3GEYJ 221 V (220) | T | 22.5/16.0 |
| R13 | 7030003360 | S.RES ERJ3GEYJ 221 V (220) | T | 23.8/16.0 |
| R14 | 7030003360 | S.RES ERJ3GEYJ 221 V (220) | T | 25.1/16.0 |
| R15 | 7030003360 | S.RES ERJ3GEYJ 221 V (220) | T | 26.4/16.3 |
| R16 | 7030003360 | S.RES ERJ3GEYJ 221 V (220) | T | 32.5/15.4 |
| R17 | 7030003360 | S.RES ERJ3GEYJ 221 V (220) | T | 33.8/15.4 |
| R30 | 7030003240 | S.RES ERJ3GEYJ 220 V (22) | T | 21.7/113.7 |
| R31 | 7030003600 | S.RES ERJ3GEYJ 223 V (22K) | T | 20.4/111.1 |
| R32 | 7030003320 | S.RES ERJ3GEYJ 101 V (100) | T | 23.0/113.7 |
| R33 | 7030003340 | S.RES ERJ3GEYJ 151 V (150) | T | 19.1/115.0 |
| R51 | 7030011030 | S.RES ERJ1TYJ 270U (27) | T | 66.3/13.9 |
| R52 | 7030010550 | S.RES ERJ1TYJ 820U (82) | B | 66.3/13.9 |
| R61 | 7030011030 | S.RES ERJ1TYJ 270U (27) | T | 45.1/13.9 |
| R100 | 7030003860 | S.RES ERJ3GE JPW V | T | 35.5/101.5 |
| R101 | 7030003740 | S.RES ERJ3GEYJ 334 V (330K) | T | 34.2/101.5 |
| R103 | 7030007230 | S.RES ERA3YED 102V (1K) | T | 25.1/100.3 |
| R104 | 7030007230 | S.RES ERA3YED 102V (1K) | T | 26.4/100.3 |
| R105 | 7030007230 | S.RES ERA3YED 102V (1K) | T | 27.8/100.3 |
| R106 | 7030003360 | S.RES ERJ3GEYJ 221 V (220) | T | 29.1/100.3 |
| R107 | 7030003320 | S.RES ERJ3GEYJ 101 V (100) | T | 38.1/101.5 |
| R108 | 7030007230 | S.RES ERA3YED 102V (1K) | T | 28.9/79.0 |
| R109 | 7030007230 | S.RES ERA3YED 102V (1K) | T | 41.9/84.5 |
| R110 | 7030007220 | S.RES ERA3YED 202V (2K) | T | 14.6/100.5 |
| R111 | 7030007220 | S.RES ERA3YED 202V (2K) | T | 17.2/100.5 |
| R112 | 7030007220 | S.RES ERA3YED 202V (2K) | T | 17.2/99.2 |
| R113 | 7030007220 | S.RES ERA3YED 202V (2K) | T | 17.2/97.9 |
| R114 | 7030007220 | S.RES ERA3YED 202V (2K) | T | 17.2/96.6 |
| R115 | 7030007220 | S.RES ERA3YED 202V (2K) | T | 17.2/95.2 |
| R116 | 7030007220 | S.RES ERA3YED 202V (2K) | T | 17.2/93.9 |
| R117 | 7030007220 | S.RES ERA3YED 202V (2K) | T | 17.2/92.6 |
| R118 | 7030007200 | S.RES ERA3YEB 202V (2K) | T | 17.2/91.3 |
| R119 | 7030007200 | S.RES ERA3YEB 202V (2K) | T | 17.2/89.6 |
| R120 | 7030007200 | S.RES ERA3YEB 202V (2K) | T | 17.2/87.0 |
| R121 | 7030007200 | S.RES ERA3YEB 202V (2K) | T | 17.2/84.4 |
| R122 | 7030007200 | S.RES ERA3YEB 202V (2K) | T | 17.2/81.8 |
| R123 | 7030007230 | S.RES ERA3YED 102V (1K) | T | 14.6/99.2 |
| R124 | 7030007230 | S.RES ERA3YED 102V (1K) | T | 14.6/97.9 |
| R125 | 7030007230 | S.RES ERA3YED 102V (1K) | T | 14.6/96.6 |
| R126 | 7030007230 | S.RES ERA3YED 102V (1K) | T | 14.6/95.2 |
| R127 | 7030007230 | S.RES ERA3YED 102V (1K) | T | 14.6/93.9 |
| R128 | 7030007230 | S.RES ERA3YED 102V (1K) | T | 14.6/92.6 |
| R129 | 7030007210 | S.RES ERA3YEB 102V (1K) | T | 14.6/91.3 |
| R130 | 7030007210 | S.RES ERA3YEB 102V (1K) | T | 14.6/89.6 |
| R131 | 7030007210 | S.RES ERA3YEB 102V (1K) | T | 14.6/88.3 |
| R132 | 7030007210 | S.RES ERA3YEB 102V (1K) | T | 14.6/87.0 |
| R133 | 7030007210 | S.RES ERA3YEB 102V (1K) | T | 14.6/85.7 |
| R134 | 7030009861 | S.RES ERA3YED 471V (470) | T | 14.6/84.4 |
| R135 | 7030003860 | S.RES ERJ3GE JPW V | T | 30.4/75.8 |
| R136 | 7030003800 | S.RES ERJ3GEYJ 105 V (1M) | T | 33.0/77.1 |
| R137 | 7030003200 | S.RES ERJ3GEYJ 100 V (10) | T | 35.5/75.8 |
| R138 | 7030003860 | S.RES ERJ3GE JPW V | T | 16.8/78.6 |
| R139 | 7030003860 | S.RES ERJ3GE JPW V | T | 17.6/75.8 |
| R140 | 7030007230 | S.RES ERA3YED 102V (1K) | B | 31.2/92.1 |
| R141 | 7030003320 | S.RES ERJ3GEYJ 101 V (100) | B | 33.8/86.7 |
| R150 | 7030003330 | S.RES ERJ3GEYJ 121 V (120) | B | 37.9/86.2 |
| R151 | 7030003220 | S.RES ERJ3GEYJ 150 V (15) | B | 38.6/88.1 |
| R152 | 7030005871 | S.RES ERA3YKD 104V (100K) | B | 36.2/82.6 |
| R153 | 7030005321 | S.RES ERA3YED 103V (10K) | T | 19.2/62.7 |
| R154 | 7030003320 | S.RES ERJ3GEYJ 101 V (100) | B | 26.3/54.1 |
| R155 | 7030003350 | S.RES ERJ3GEYJ 181 V (180) | B | 23.0/54.1 |
| R156 | 7030005871 | S.RES ERA3YKD 104V (100K) | T | 24.6/53.1 |
| R157 | 7030005871 | S.RES ERA3YKD 104V (100K) | T | 26.9/58.0 |
| R158 | 7030003340 | S.RES ERJ3GEYJ 151 V (150) | T | 30.0/57.3 |
| R159 | 7030003320 | S.RES ERJ3GEYJ 101 V (100) | B | 33.6/61.4 |
| R160 | 7030003360 | S.RES ERJ3GEYJ 221 V (220) | B | 33.6/59.6 |
| R161 | 7030003640 | S.RES ERJ3GEYJ 473 V (47K) | B | 33.6/54.8 |
| R163 | 7030003220 | S.RES ERJ3GEYJ 150 V (15) | B | 30.3/56.6 |
| R164 | 7030003310 | S.RES ERJ3GEYJ 820 V (82) | B | 34.1/70.4 |
| R165 | 7030003320 | S.RES ERJ3GEYJ 101 V (100) | B | 30.8/70.4 |
| R166 | 7030003320 | S.RES ERJ3GEYJ 101 V (100) | B | 30.8/72.2 |
| R167 | 7030003240 | S.RES ERJ3GEYJ 220 V (22) | B | 37.4/75.8 |
| R168 | 7030003360 | S.RES ERJ3GEYJ 221 V (220) | B | 34.1/75.8 |
| R169 | 7030003640 | S.RES ERJ3GEYJ 473 V (47K) | B | 30.8/75.8 |
| R202 | 7030007230 | S.RES ERA3YED 102V (1K) | T | 22.2/39.7 |
| R203 | 7030007230 | S.RES ERA3YED 102V (1K) | T | 22.2/38.4 |
| R204 | 7030003360 | S.RES ERJ3GEYJ 221 V (220) | T | 22.2/37.1 |
| R205 | 7030005321 | S.RES ERA3YED 103V (10K) | T | 27.4/34.0 |
| R206 | 7030003220 | S.RES ERJ3GEYJ 150 V (15) | T | 31.1/45.7 |
| R210 | 7030005351 | S.RES ERA3YED 182V (1.8K) | T | 35.7/37.5 |
| R217 | 7030009651 | S.RES ERA3YHD 820V (82) | B | 40.5/42.8 |
| R219 | 7030009691 | S.RES ERA3YED 101V (100) | B | 40.1/35.7 |
| R220 | 7030005871 | S.RES ERA3YKD 104V (100K) | T | 73.2/37.6 |
| R221 | 7030005871 | S.RES ERA3YKD 104V (100K) | T | 72.3/30.9 |
| R222 | 7030003400 | S.RES ERJ3GEYJ 471 V (470) | T | 81.4/38.3 |
| R223 | 7030007230 | S.RES ERA3YED 102V (1K) | T | 81.9/31.9 |
| R224 | 7030003320 | S.RES ERJ3GEYJ 101 V (100) | T | 73.2/40.2 |

Eqv.= This component is equivalent to the REF No. component listed above, and may be substituted on parts orders and repairs.

M.=Mounted side (T: Mounted on the Top side, B: Mounted on the Bottom side)
S.=Surface mount

## [RXPLL-A UNIT]

| REF NO. | PARTS NO. | DESCRIPTION | M. | H/V LOCATION |
|---|---|---|---|---|
| R230 | 7030005871 | S.RES ERA3YKD 104V (100K) | T | 73.2/50.1 |
| R231 | 7030005871 | S.RES ERA3YKD 104V (100K) | T | 72.3/43.3 |
| R232 | 7030003360 | S.RES ERJ3GEYJ 221 V (220) | T | 81.4/50.8 |
| R233 | 7030007230 | S.RES ERA3YED 102V (1K) | T | 81.9/44.4 |
| R234 | 7030003320 | S.RES ERJ3GEYJ 101 V (100) | T | 73.2/52.7 |
| R240 | 7030005871 | S.RES ERA3YKD 104V (100K) | T | 73.2/62.6 |
| R241 | 7030005871 | S.RES ERA3YKD 104V (100K) | T | 72.3/55.8 |
| R242 | 7030003360 | S.RES ERJ3GEYJ 221 V (220) | T | 81.4/63.3 |
| R243 | 7030007230 | S.RES ERA3YED 102V (1K) | T | 81.9/56.9 |
| R244 | 7030003320 | S.RES ERJ3GEYJ 101 V (100) | T | 73.2/65.2 |
| R250 | 7030005871 | S.RES ERA3YKD 104V (100K) | T | 73.2/75.1 |
| R251 | 7030005871 | S.RES ERA3YKD 104V (100K) | T | 72.3/68.4 |
| R252 | 7030003360 | S.RES ERJ3GEYJ 221 V (220) | T | 81.4/75.8 |
| R253 | 7030007230 | S.RES ERA3YED 102V (1K) | T | 81.9/69.4 |
| R254 | 7030003320 | S.RES ERJ3GEYJ 101 V (100) | T | 73.2/77.7 |
| R260 | 7030005871 | S.RES ERA3YKD 104V (100K) | T | 73.2/87.6 |
| R261 | 7030005871 | S.RES ERA3YKD 104V (100K) | T | 72.3/80.9 |
| R262 | 7030003400 | S.RES ERJ3GEYJ 471 V (470) | T | 81.4/88.3 |
| R263 | 7030007230 | S.RES ERA3YED 102V (1K) | T | 81.9/81.9 |
| R264 | 7030003320 | S.RES ERJ3GEYJ 101 V (100) | T | 73.2/90.2 |
| R270 | 7030005871 | S.RES ERA3YKD 104V (100K) | T | 73.2/99.5 |
| R271 | 7030005871 | S.RES ERA3YKD 104V (100K) | T | 72.3/92.8 |
| R272 | 7030003360 | S.RES ERJ3GEYJ 221 V (220) | T | 81.4/100.8 |
| R273 | 7030007230 | S.RES ERA3YED 102V (1K) | T | 81.9/94.0 |
| R274 | 7030003320 | S.RES ERJ3GEYJ 101 V (100) | T | 73.2/102.1 |
| R301 | 7030003200 | S.RES ERJ3GEYJ 100 V (10) | T | 86.5/30.6 |
| R302 | 7030007230 | S.RES ERA3YED 102V (1K) | T | 86.5/29.3 |
| R303 | 7030003360 | S.RES ERJ3GEYJ 221 V (220) | T | 92.1/28.0 |
| R304 | 7030003490 | S.RES ERJ3GEYJ 272 V (2.7K) | T | 94.0/30.1 |
| R305 | 7030003510 | S.RES ERJ3GEYJ 392 V (3.9K) | T | 95.3/30.1 |
| R306 | 7030003360 | S.RES ERJ3GEYJ 221 V (220) | T | 94.8/32.2 |
| R307 | 7030009841 | S.RES ERA3YHD 330V (33) | T | 92.1/32.2 |
| R308 | 7030003370 | S.RES ERJ3GEYJ 271 V (270) | B | 92.6/43.4 |
| R309 | 7030003540 | S.RES ERJ3GEYJ 682 V (6.8K) | B | 89.1/47.0 |
| R310 | 7030003500 | S.RES ERJ3GEYJ 332 V (3.3K) | B | 92.6/47.0 |
| R311 | 7030003350 | S.RES ERJ3GEYJ 181 V (180) | B | 89.1/45.2 |
| R312 | 7030003360 | S.RES ERJ3GEYJ 221 V (220) | B | 92.5/27.8 |
| R313 | 7030003490 | S.RES ERJ3GEYJ 272 V (2.7K) | B | 91.2/23.1 |
| R314 | 7030003510 | S.RES ERJ3GEYJ 392 V (3.9K) | B | 88.3/23.1 |
| R315 | 7030003360 | S.RES ERJ3GEYJ 221 V (220) | B | 87.6/25.1 |
| R316 | 7030003280 | S.RES ERJ3GEYJ 470 V (47) | B | 78.3/26.2 |
| R317 | 7030006220 | S.RES ERJ12YJ470U (47) | B | 90.1/31.5 |
| R318 | 7030009841 | S.RES ERA3YHD 330V (33) | B | 92.6/41.6 |
| R341 | 7030007230 | S.RES ERA3YED 102V (1K) | T | 92.1/40.1 |
| R342 | 7030005321 | S.RES ERA3YED 103V (10K) | T | 86.5/32.2 |
| R343 | 7030007230 | S.RES ERA3YED 102V (1K) | T | 89.3/34.8 |
| R351 | 7030003200 | S.RES ERJ3GEYJ 100 V (10) | B | 89.1/52.4 |
| R352 | 7030010980 | S.RES ERA3YHD 470V (47) | T | 89.3/55.8 |
| R353 | 7030009591 | S.RES ERA3YED 472V (4.7K) | T | 89.3/54.5 |
| R354 | 7030009591 | S.RES ERA3YED 472V (4.7K) | T | 89.3/50.4 |
| R355 | 7030009591 | S.RES ERA3YED 472V (4.7K) | T | 89.3/53.2 |
| R356 | 7030003320 | S.RES ERJ3GEYJ 101 V (100) | T | 89.3/57.1 |
| R357 | 7310005390 | S.TRI EVM3VBQ3 4.7K (4.7K) | T | 93.6/52.7 |
| R358 | 7030010980 | S.RES ERA3YHD 470V (47) | T | 94.9/56.4 |
| R359 | 7030003320 | S.RES ERJ3GEYJ 101 V (100) | T | 94.9/59.0 |
| R360 | 7030003320 | S.RES ERJ3GEYJ 101 V (100) | B | 92.6/63.9 |
| R361 | 7030003490 | S.RES ERJ3GEYJ 272 V (2.7K) | B | 89.2/62.1 |
| R362 | 7030003510 | S.RES ERJ3GEYJ 392 V (3.9K) | B | 92.6/60.3 |
| R363 | 7030003320 | S.RES ERJ3GEYJ 101 V (100) | B | 92.6/65.7 |
| R364 | 7030003410 | S.RES ERJ3GEYJ 561 V (560) | T | 94.9/82.9 |
| R365 | 7030007860 | S.RES ERJ3GEYJ 8R2V (8.2) | T | 92.0/83.5 |
| R366 | 7030003410 | S.RES ERJ3GEYJ 561 V (560) | T | 94.9/84.2 |
| R368 | 7030005321 | S.RES ERA3YED 103V (10K) | T | 86.1/59.6 |
| R369 | 7030008240 | S.RES ERJ12Y0R00U | B | 95.4/57.2 |
| R421 | 7030007230 | S.RES ERA3YED 102V (1K) | T | 92.1/87.9 |
| R422 | 7030007230 | S.RES ERA3YED 102V (1K) | T | 89.3/87.9 |
| R423 | 7030007230 | S.RES ERA3YED 102V (1K) | T | 92.1/89.2 |
| R424 | 7030007230 | S.RES ERA3YED 102V (1K) | T | 89.3/89.2 |
| R425 | 7030003410 | S.RES ERJ3GEYJ 561 V (560) | T | 90.1/81.6 |
| R426 | 7030003410 | S.RES ERJ3GEYJ 561 V (560) | T | 91.5/93.3 |
| R427 | 7030003320 | S.RES ERJ3GEYJ 101 V (100) | B | 86.8/87.3 |
| R428 | 7030009861 | S.RES ERA3YED 471V (470) | B | 92.1/88.0 |
| R429 | 7030009861 | S.RES ERA3YED 471V (470) | B | 89.3/88.0 |
| R441 | 7030003440 | S.RES ERJ3GEYJ 102 V (1K) | T | 92.1/75.6 |
| R442 | 7030005321 | S.RES ERA3YED 103V (10K) | T | 88.9/71.0 |
| R443 | 7030003440 | S.RES ERJ3GEYJ 102 V (1K) | T | 88.9/72.3 |
| R501 | 7030003360 | S.RES ERJ3GEYJ 221 V (220) | T | 29.2/153.1 |
| R502 | 7030007230 | S.RES ERA3YED 102V (1K) | T | 27.9/153.1 |
| R503 | 7030007230 | S.RES ERA3YED 102V (1K) | T | 26.5/153.1 |
| R504 | 7030007230 | S.RES ERA3YED 102V (1K) | T | 25.2/153.1 |
| R506 | 7030003800 | S.RES ERJ3GEYJ 105 V (1M) | T | 34.1/154.5 |
| R507 | 7030003860 | S.RES ERJ3GE JPW V | B | 50.9/127.0 |
| R509 | 7030007230 | S.RES ERA3YED 102V (1K) | T | 42.5/136.1 |
| R510 | 7030007220 | S.RES ERA3YED 202V (2K) | T | 14.6/153.6 |
| R511 | 7030007220 | S.RES ERA3YED 202V (2K) | T | 17.2/153.6 |
| R512 | 7030007220 | S.RES ERA3YED 202V (2K) | T | 17.2/152.3 |
| R513 | 7030007220 | S.RES ERA3YED 202V (2K) | T | 17.2/151.0 |
| R514 | 7030007220 | S.RES ERA3YED 202V (2K) | T | 17.2/149.7 |
| R515 | 7030007220 | S.RES ERA3YED 202V (2K) | T | 17.2/148.3 |
| R516 | 7030007220 | S.RES ERA3YED 202V (2K) | T | 17.2/147.0 |
| R517 | 7030007220 | S.RES ERA3YED 202V (2K) | T | 17.2/145.7 |
| R518 | 7030007200 | S.RES ERA3YEB 202V (2K) | T | 17.2/144.4 |
| R519 | 7030007200 | S.RES ERA3YEB 202V (2K) | T | 17.2/142.7 |
| R520 | 7030007200 | S.RES ERA3YEB 202V (2K) | T | 17.2/141.4 |
| R521 | 7030007200 | S.RES ERA3YEB 202V (2K) | T | 17.2/140.1 |
| R522 | 7030007200 | S.RES ERA3YEB 202V (2K) | T | 17.2/138.8 |
| R523 | 7030007230 | S.RES ERA3YED 102V (1K) | T | 14.6/152.3 |
| R524 | 7030007230 | S.RES ERA3YED 102V (1K) | T | 14.6/151.0 |
| R525 | 7030007230 | S.RES ERA3YED 102V (1K) | T | 14.6/149.7 |
| R526 | 7030007230 | S.RES ERA3YED 102V (1K) | T | 14.6/148.3 |
| R527 | 7030007230 | S.RES ERA3YED 102V (1K) | T | 14.6/147.0 |
| R528 | 7030007230 | S.RES ERA3YED 102V (1K) | T | 14.6/145.7 |
| R529 | 7030007210 | S.RES ERA3YEB 102V (1K) | T | 14.6/144.4 |
| R530 | 7030007210 | S.RES ERA3YEB 102V (1K) | T | 14.6/142.7 |
| R531 | 7030007210 | S.RES ERA3YEB 102V (1K) | T | 14.6/141.4 |

## [RXPLL-A UNIT]

| REF NO. | PARTS NO. | DESCRIPTION | M. | H/V LOCATION |
|---|---|---|---|---|
| R532 | 7030007210 | S.RES ERA3YEB 102V (1K) | T | 14.6/140.1 |
| R533 | 7030007210 | S.RES ERA3YEB 102V (1K) | T | 14.6/138.8 |
| R534 | 7030003860 | S.RES ERJ3GE JPW V | T | 22.2/127.6 |
| R535 | 7030003800 | S.RES ERJ3GEYJ 105 V (1M) | T | 24.8/129.8 |
| R536 | 7030003200 | S.RES ERJ3GEYJ 100 V (10) | T | 28.0/128.3 |
| R537 | 7030007230 | S.RES ERA3YED 102V (1K) | T | 30.3/131.9 |
| R538 | 7030003360 | S.RES ERJ3GEYJ 221 V (220) | B | 34.9/146.5 |
| R540 | 7030007230 | S.RES ERA3YED 102V (1K) | B | 52.3/142.8 |
| R544 | 7030005871 | S.RES ERA3YKD 104V (100K) | T | 69.4/140.4 |
| R545 | 7030005871 | S.RES ERA3YKD 104V (100K) | T | 69.4/139.1 |
| R546 | 7030009861 | S.RES ERA3YED 471V (470) | T | 67.5/150.7 |
| R548 | 7030009591 | S.RES ERA3YED 472V (4.7K) | B | 43.4/136.5 |
| R550 | 7030009691 | S.RES ERA3YED 101V (100) | B | 43.4/134.7 |
| R554 | 7030009891 | S.RES ERA3YED 151V (150) | B | 47.2/133.9 |
| R555 | 7030003380 | S.RES ERJ3GEYJ 331 V (330) | B | 61.9/142.1 |
| R556 | 7030005981 | S.RES ERA3YED 333V (33K) | B | 44.3/128.2 |
| R561 | 7030003200 | S.RES ERJ3GEYJ 100 V (10) | T | 71.3/148.5 |
| R562 | 7030003360 | S.RES ERJ3GEYJ 221 V (220) | T | 65.7/155.5 |
| R563 | 7030003490 | S.RES ERJ3GEYJ 272 V (2.7K) | T | 70.5/151.9 |
| R564 | 7030003510 | S.RES ERJ3GEYJ 392 V (3.9K) | T | 70.5/150.6 |
| R565 | 7030003360 | S.RES ERJ3GEYJ 221 V (220) | T | 67.0/155.5 |
| R570 | 7030003230 | S.RES ERJ3GEYJ 180 V (18) | T | 63.1/155.5 |
| R571 | 7030003230 | S.RES ERJ3GEYJ 180 V (18) | T | 58.5/155.0 |
| R572 | 7030003290 | S.RES ERJ3GEYJ 560 V (56) | B | 57.2/156.3 |
| R573 | 7030009841 | S.RES ERA3YHD 330V (33) | T | 61.8/155.5 |
| R574 | 7030003300 | S.RES ERJ3GEYJ 680 V (68) | T | 60.5/155.5 |
| R575 | 7030003220 | S.RES ERJ3GEYJ 150 V (15) | T | 58.5/156.3 |
| R580 | 7030009861 | S.RES ERA3YED 471V (470) | T | 41.9/153.7 |
| R581 | 7030003360 | S.RES ERJ3GEYJ 221 V (220) | T | 41.9/145.5 |
| R582 | 7030003600 | S.RES ERJ3GEYJ 223 V (22K) | T | 41.9/149.5 |
| R587 | 7030003370 | S.RES ERJ3GEYJ 271 V (270) | T | 55.7/157.6 |
| R588 | 7030003230 | S.RES ERJ3GEYJ 180 V (18) | T | 58.5/158.9 |
| R589 | 7030003370 | S.RES ERJ3GEYJ 271 V (270) | T | 55.7/158.9 |
| R591 | 7030003320 | S.RES ERJ3GEYJ 101 V (100) | T | 58.2/169.9 |
| R592 | 7030005321 | S.RES ERA3YED 103V (10K) | T | 58.5/167.9 |
| R593 | 7030003480 | S.RES ERJ3GEYJ 222 V (2.2K) | T | 58.5/165.1 |
| R594 | 7030003320 | S.RES ERJ3GEYJ 101 V (100) | B | 61.9/168.1 |
| R595 | 7030003640 | S.RES ERJ3GEYJ 473 V (47K) | B | 55.9/165.3 |
| R596 | 7030003540 | S.RES ERJ3GEYJ 682 V (6.8K) | B | 54.7/168.9 |
| R603 | 7030003480 | S.RES ERJ3GEYJ 222 V (2.2K) | T | 56.3/110.9 |
| R604 | 7030007230 | S.RES ERA3YED 102V (1K) | B | 53.5/115.9 |
| R605 | 7030003320 | S.RES ERJ3GEYJ 101 V (100) | T | 46.8/113.4 |
| R651 | 7030007230 | S.RES ERA3YED 102V (1K) | B | 23.5/177.1 |
| R652 | 7030003360 | S.RES ERJ3GEYJ 221 V (220) | T | 13.5/170.8 |
| R653 | 7030007230 | S.RES ERA3YED 102V (1K) | T | 13.5/169.5 |
| R654 | 7030007230 | S.RES ERA3YED 102V (1K) | T | 13.5/168.2 |
| R656 | 7030003800 | S.RES ERJ3GEYJ 105 V (1M) | T | 15.0/161.4 |
| R657 | 7030003320 | S.RES ERJ3GEYJ 101 V (100) | T | 20.2/161.4 |
| R661 | 7030007220 | S.RES ERA3YED 202V (2K) | T | 31.7/162.8 |
| R662 | 7030007220 | S.RES ERA3YED 202V (2K) | T | 31.7/164.1 |
| R663 | 7030007220 | S.RES ERA3YED 202V (2K) | T | 31.7/165.4 |
| R664 | 7030007220 | S.RES ERA3YED 202V (2K) | T | 31.7/166.7 |
| R665 | 7030007220 | S.RES ERA3YED 202V (2K) | T | 31.7/168.0 |
| R666 | 7030007220 | S.RES ERA3YED 202V (2K) | T | 31.7/170.6 |
| R667 | 7030007220 | S.RES ERA3YED 202V (2K) | T | 31.7/171.9 |
| R668 | 7030007220 | S.RES ERA3YED 202V (2K) | T | 31.7/173.2 |
| R669 | 7030007200 | S.RES ERA3YEB 202V (2K) | T | 31.7/174.5 |
| R670 | 7030007200 | S.RES ERA3YEB 202V (2K) | T | 31.7/175.8 |
| R671 | 7030007200 | S.RES ERA3YEB 202V (2K) | T | 31.7/177.1 |
| R673 | 7030007230 | S.RES ERA3YED 102V (1K) | T | 34.3/165.4 |
| R674 | 7030007230 | S.RES ERA3YED 102V (1K) | T | 34.3/166.7 |
| R675 | 7030007230 | S.RES ERA3YED 102V (1K) | T | 34.3/168.0 |
| R676 | 7030007230 | S.RES ERA3YED 102V (1K) | T | 34.3/169.3 |
| R677 | 7030007230 | S.RES ERA3YED 102V (1K) | T | 34.3/170.6 |
| R678 | 7030007230 | S.RES ERA3YED 102V (1K) | T | 34.3/171.9 |
| R679 | 7030007210 | S.RES ERA3YEB 102V (1K) | T | 34.3/173.2 |
| R680 | 7030007210 | S.RES ERA3YEB 102V (1K) | T | 34.3/174.5 |
| R681 | 7030007210 | S.RES ERA3YEB 102V (1K) | T | 34.3/175.8 |
| R682 | 7030003860 | S.RES ERJ3GE JPW V | B | 58.4/166.0 |
| R685 | 7030003460 | S.RES ERJ3GEYJ 152 V (1.5K) | T | 38.4/169.7 |
| R686 | 7030003320 | S.RES ERJ3GEYJ 101 V (100) | T | 40.3/163.4 |
| R687 | 7030003470 | S.RES ERJ3GEYJ 182 V (1.8K) | T | 37.4/165.1 |
| R688 | 7030003480 | S.RES ERJ3GEYJ 222 V (2.2K) | T | 34.3/162.8 |
| R689 | 7030003360 | S.RES ERJ3GEYJ 221 V (220) | T | 33.6/161.5 |
| R690 | 7030003370 | S.RES ERJ3GEYJ 271 V (270) | T | 46.4/165.3 |
| R691 | 7030003230 | S.RES ERJ3GEYJ 180 V (18) | T | 48.4/164.8 |
| R692 | 7030003370 | S.RES ERJ3GEYJ 271 V (270) | T | 46.4/166.6 |
| R693 | 7030003500 | S.RES ERJ3GEYJ 332 V (3.3K) | T | 37.1/169.7 |
| R704 | 7030009841 | S.RES ERA3YHD 330V (33) | T | 30.8/113.7 |
| R705 | 7030003600 | S.RES ERJ3GEYJ 223 V (22K) | T | 29.5/113.7 |
| R706 | 7030005321 | S.RES ERA3YED 103V (10K) | T | 28.2/113.7 |
| R707 | 7030009861 | S.RES ERA3YED 471V (470) | T | 30.8/108.1 |
| R708 | 7030003410 | S.RES ERJ3GEYJ 561 V (560) | T | 43.3/118.8 |
| R709 | 7030007860 | S.RES ERJ3GEYJ 8R2V (8.2) | T | 43.3/116.0 |
| R710 | 7030003410 | S.RES ERJ3GEYJ 561 V (560) | T | 43.8/121.1 |
| R711 | 7030003320 | S.RES ERJ3GEYJ 101 V (100) | T | 38.0/154.5 |
| R802 | 7030009861 | S.RES ERA3YED 471V (470) | T | 78.3/147.3 |
| R803 | 7030005321 | S.RES ERA3YED 103V (10K) | T | 79.6/147.3 |
| R804 | 7030003320 | S.RES ERJ3GEYJ 101 V (100) | T | 80.4/149.5 |
| R805 | 7030003370 | S.RES ERJ3GEYJ 271 V (270) | T | 81.5/158.7 |
| R806 | 7030003230 | S.RES ERJ3GEYJ 180 V (18) | T | 84.3/158.7 |
| R807 | 7030003370 | S.RES ERJ3GEYJ 271 V (270) | T | 87.1/158.7 |
| R812 | 7030007230 | S.RES ERA3YED 102V (1K) | T | 73.9/177.6 |
| R814 | 7030005321 | S.RES ERA3YED 103V (10K) | T | 75.2/177.6 |
| R815 | 7030003320 | S.RES ERJ3GEYJ 101 V (100) | T | 79.6/173.6 |
| R831 | 7030003330 | S.RES ERJ3GEYJ 121 V (120) | B | 85.6/180.0 |
| R832 | 7030003290 | S.RES ERJ3GEYJ 560 V (56) | B | 88.5/177.2 |
| R833 | 7030003330 | S.RES ERJ3GEYJ 121 V (120) | B | 89.3/174.6 |
| R834 | 7030003380 | S.RES ERJ3GEYJ 331 V (330) | T | 91.6/155.7 |
| R835 | 7030003320 | S.RES ERJ3GEYJ 101 V (100) | T | 94.4/155.7 |
| R836 | 7030003380 | S.RES ERJ3GEYJ 331 V (330) | T | 88.8/145.4 |
| R837 | 7030003220 | S.RES ERJ3GEYJ 150 V (15) | T | 91.6/145.4 |
| R838 | 7030003380 | S.RES ERJ3GEYJ 331 V (330) | T | 94.4/145.4 |
| R839 | 7030005321 | S.RES ERA3YED 103V (10K) | B | 77.9/171.0 |
| R840 | 7030003540 | S.RES ERJ3GEYJ 682 V (6.8K) | B | 74.5/165.7 |

Eqv.= This component is equivalent to the REF No. component listed above, and may be substituted on parts orders and repairs.

M.=Mounted side (T: Mounted on the Top side, B: Mounted on the Bottom side)
S.=Surface mount

## [RXPLL-A UNIT]

| REF NO. | PARTS NO. | DESCRIPTION | M. | H/V LOCATION |
|---|---|---|---|---|
| R1000 | 7030003320 | S.RES ERJ3GEYJ 101 V (100) | B | 177.2/11.2 |
| R1001 | 7030003640 | S.RES ERJ3GEYJ 473 V (47K) | T | 182.8/63.5 |
| R1002 | 7030003480 | S.RES ERJ3GEYJ 222 V (2.2K) | T | 183.5/65.7 |
| R1003 | 7030010980 | S.RES ERA3YHD 470V (47) | T | 162.0/13.4 |
| R1004 | 7030007230 | S.RES ERA3YED 102V (1K) | B | 166.4/12.9 |
| R1005 | 7030003550 | S.RES ERJ3GEYJ 822 V (8.2K) | T | 144.0/26.1 |
| R1006 | 7030007230 | S.RES ERA3YED 102V (1K) | T | 145.3/26.1 |
| R1007 | 7030004030 | S.RES ERJ3GEYJ 5R6 V (5.6) | B | 153.7/33.7 |
| R1008 | 7030003240 | S.RES ERJ3GEYJ 220 V (22) | T | 144.0/36.4 |
| R1009 | 7030010980 | S.RES ERA3YHD 470V (47) | T | 182.4/29.3 |
| R1010 | 7030010980 | S.RES ERA3YHD 470V (47) | T | 154.5/33.2 |
| R1013 | 7030007230 | S.RES ERA3YED 102V (1K) | B | 172.7/40.8 |
| R1014 | 7030007230 | S.RES ERA3YED 102V (1K) | B | 156.7/40.8 |
| R1015 | 7030003530 | S.RES ERJ3GEYJ 562 V (5.6K) | B | 172.7/45.4 |
| R1016 | 7030003530 | S.RES ERJ3GEYJ 562 V (5.6K) | B | 156.7/45.4 |
| R1017 | 7030003530 | S.RES ERJ3GEYJ 562 V (5.6K) | B | 169.7/12.9 |
| R1018 | 7030003650 | S.RES ERJ3GEYJ 563 V (56K) | B | 181.1/62.4 |
| R1019 | 7030005321 | S.RES ERA3YED 103V (10K) | B | 181.9/65.0 |
| R1020 | 7030003390 | S.RES ERJ3GEYJ 391 V (390) | T | 179.6/18.4 |
| R1021 | 7030003220 | S.RES ERJ3GEYJ 150 V (15) | T | 177.0/19.4 |
| R1022 | 7030003390 | S.RES ERJ3GEYJ 391 V (390) | T | 180.9/19.4 |
| R1023 | 7030010980 | S.RES ERA3YHD 470V (47) | B | 149.4/33.5 |
| R1024 | 7030003200 | S.RES ERJ3GEYJ 100 V (10) | B | 150.2/31.4 |
| R1025 | 7030003300 | S.RES ERJ3GEYJ 680 V (68) | T | 178.3/19.4 |
| R1026 | 7030003480 | S.RES ERJ3GEYJ 222 V (2.2K) | B | 171.2/14.2 |
| R1027 | 7030003200 | S.RES ERJ3GEYJ 100 V (10) | B | 176.5/38.3 |
| R1028 | 7030003200 | S.RES ERJ3GEYJ 100 V (10) | B | 160.5/38.3 |
| R1029 | 7030010980 | S.RES ERA3YHD 470V (47) | B | 178.3/46.2 |
| R1030 | 7030010980 | S.RES ERA3YHD 470V (47) | B | 162.3/46.2 |
| R1051 | 7030003800 | S.RES ERJ3GEYJ 105 V (1M) | T | 178.6/93.1 |
| R1054 | 7030011500 | S.RES ERA3YHD 270V (27) | T | 149.2/83.2 |
| R1055 | 7030000010 | S.RES MCR10EZHJ JPW (000) | T | 162.1/76.6 |
| R1056 | 7030000010 | S.RES MCR10EZHJ JPW (000) | T | 177.5/71.1 |
| R1071 | 7030010980 | S.RES ERA3YHD 470V (47) | B | 165.9/76.5 |
| R1072 | 7030000010 | S.RES MCR10EZHJ JPW (000) | T | 134.0/84.2 |
| R1073 | 7030000010 | S.RES MCR10EZHJ JPW (000) | T | 135.5/85.7 |
| R1101 | 7310004860 | S.TRI EVM-3YSX50 B53 (502) | T | 180.1/90.2 |
| R1102 | 7030005871 | S.RES ERA3YKD 104V (100K) | B | 180.2/100.6 |
| R1103 | 7030007680 | S.RES ERJ8ENF 47R0V (47) | T | 181.7/104.7 |
| R1104 | 7030007680 | S.RES ERJ8ENF 47R0V (47) | T | 173.6/107.2 |
| R1105 | 7030003500 | S.RES ERJ3GEYJ 332 V (3.3K) | T | 176.7/87.7 |
| R1106 | 7030009620 | S.RES ERJ12YJ120U (12) | B | 179.6/117.9 |
| R1107 | 7030010980 | S.RES ERA3YHD 470V (47) | T | 175.6/120.3 |
| R1109 | 7030007180 | S.RES ERJ12YJ150U (15) | B | 176.6/125.7 |
| R1110 | 7030003480 | S.RES ERJ3GEYJ 222 V (2.2K) | B | 168.5/131.7 |
| R1111 | 7030003480 | S.RES ERJ3GEYJ 222 V (2.2K) | T | 166.2/130.4 |
| R1113 | 7030003480 | S.RES ERJ3GEYJ 222 V (2.2K) | T | 166.2/131.7 |
| R1114 | 7030004040 | S.RES ERJ3GEYJ 4R7 V (4.7) | T | 179.3/125.3 |
| R1115 | 7030006240 | S.RES ERJ12YJ181U (180) | B | 176.6/130.0 |
| R1116 | 7030007230 | S.RES ERA3YED 102V (1K) | T | 175.7/135.3 |
| R1117 | 7030004040 | S.RES ERJ3GEYJ 4R7 V (4.7) | T | 175.7/134.0 |
| R1118 | 7030003480 | S.RES ERJ3GEYJ 222 V (2.2K) | T | 175.4/132.0 |
| R1119 | 7030003470 | S.RES ERJ3GEYJ 182 V (1.8K) | T | 178.0/132.0 |
| R1120 | 7030006070 | S.RES ERJ12YJ101U (100) | B | 177.4/141.0 |
| R1121 | 7030003240 | S.RES ERJ3GEYJ 220 V (22) | T | 178.6/139.6 |
| R1122 | 7030010980 | S.RES ERA3YHD 470V (47) | T | 172.0/131.1 |
| R1123 | 7030003480 | S.RES ERJ3GEYJ 222 V (2.2K) | T | 165.7/137.4 |
| R1124 | 7030003460 | S.RES ERJ3GEYJ 152 V (1.5K) | T | 165.7/140.0 |
| R1125 | 7030003420 | S.RES ERJ3GEYJ 681 V (680) | B | 171.0/142.2 |
| R1126 | 7030003200 | S.RES ERJ3GEYJ 100 V (10) | T | 168.4/142.2 |
| R1127 | 7030010980 | S.RES ERA3YHD 470V (47) | T | 174.6/142.9 |
| R1128 | 7030003470 | S.RES ERJ3GEYJ 182 V (1.8K) | T | 174.7/146.6 |
| R1129 | 7030003470 | S.RES ERJ3GEYJ 182 V (1.8K) | T | 174.7/148.4 |
| R1130 | 7030003480 | S.RES ERJ3GEYJ 222 V (2.2K) | T | 180.6/146.4 |
| R1131 | 7030003640 | S.RES ERJ3GEYJ 473 V (47K) | B | 177.4/90.8 |
| R1132 | 7310004860 | S.TRI EVM-3YSX50 B53 (502) | T | 179.4/84.3 |
| R1133 | 7030003500 | S.RES ERJ3GEYJ 332 V (3.3K) | T | 175.5/82.5 |
| R1134 | 7030003640 | S.RES ERJ3GEYJ 473 V (47K) | T | 175.5/83.8 |
| R1135 | 7030005871 | S.RES ERA3YKD 104V (100K) | T | 182.2/97.9 |
| R1151 | 7030003280 | S.RES ERJ3GEYJ 470 V (47) | T | 134.8/64.0 |
| R1152 | 7030003280 | S.RES ERJ3GEYJ 470 V (47) | B | 117.3/56.3 |
| R1203 | 7030000010 | S.RES MCR10EZHJ JPW (000) | T | 157.5/74.9 |
| R1208 | 7030003480 | S.RES ERJ3GEYJ 222 V (2.2K) | T | 138.4/53.9 |
| R1209 | 7030005321 | S.RES ERA3YED 103V (10K) | T | 139.1/51.9 |
| R1210 | 7030003650 | S.RES ERJ3GEYJ 563 V (56K) | B | 142.5/44.4 |
| R1211 | 7030003860 | S.RES ERJ3GE JPW V | T | 117.6/7.9 |
| R1212 | 7030003860 | S.RES ERJ3GE JPW V | T | 124.9/51.1 |
| R1213 | 7030003200 | S.RES ERJ3GEYJ 100 V (10) | B | 118.9/25.0 |
| R1214 | 7030003200 | S.RES ERJ3GEYJ 100 V (10) | B | 109.1/25.0 |
| R1216 | 7030010980 | S.RES ERA3YHD 470V (47) | B | 120.8/31.7 |
| R1217 | 7030010980 | S.RES ERA3YHD 470V (47) | B | 111.3/31.7 |
| R1220 | 7030010980 | S.RES ERA3YHD 470V (47) | T | 118.8/17.3 |
| R1221 | 7030007230 | S.RES ERA3YED 102V (1K) | T | 116.4/39.9 |
| R1222 | 7030003530 | S.RES ERJ3GEYJ 562 V (5.6K) | T | 116.4/38.6 |
| R1223 | 7030010980 | S.RES ERA3YHD 470V (47) | T | 109.3/17.1 |
| R1224 | 7030007230 | S.RES ERA3YED 102V (1K) | T | 106.6/39.9 |
| R1225 | 7030003530 | S.RES ERJ3GEYJ 562 V (5.6K) | T | 106.6/38.6 |
| R1226 | 7030003410 | S.RES ERJ3GEYJ 561 V (560) | T | 158.9/92.9 |
| R1227 | 7030003410 | S.RES ERJ3GEYJ 561 V (560) | T | 154.0/92.9 |
| R1228 | 7310004860 | S.TRI EVM-3YSX50 B53 (502) | T | 156.5/92.9 |
| R1229 | 7030003480 | S.RES ERJ3GEYJ 222 V (2.2K) | B | 156.2/117.5 |
| R1230 | 7030003480 | S.RES ERJ3GEYJ 222 V (2.2K) | B | 156.2/119.3 |
| R1231 | 7030003480 | S.RES ERJ3GEYJ 222 V (2.2K) | B | 156.2/121.1 |
| R1232 | 7030003600 | S.RES ERJ3GEYJ 223 V (22K) | T | 156.3/97.5 |
| R1233 | 7030010980 | S.RES ERA3YHD 470V (47) | B | 152.5/109.5 |
| R1301 | 7030010980 | S.RES ERA3YHD 470V (47) | B | 155.8/97.5 |
| R1302 | 7030003860 | S.RES ERJ3GE JPW V | T | 159.3/116.8 |
| R1304 | 7030003620 | S.RES ERJ3GEYJ 333 V (33K) | T | 156.5/123.2 |
| R1306 | 7030006230 | S.RES ERJ12YJ151U (150) | B | 153.8/124.8 |
| R1307 | 7030003300 | S.RES ERJ3GEYJ 680 V (68) | T | 156.5/128.4 |
| R1311 | 7030000010 | S.RES MCR10EZHJ JPW (000) | T | 140.3/98.9 |
| R1312 | 7030000010 | S.RES MCR10EZHJ JPW (000) | T | 143.2/104.1 |
| R1313 | 7030000010 | S.RES MCR10EZHJ JPW (000) | T | 143.2/101.6 |
| R1357 | 7030007230 | S.RES ERA3YED 102V (1K) | B | 140.7/70.5 |
| R1358 | 7030003530 | S.RES ERJ3GEYJ 562 V (5.6K) | B | 142.8/70.5 |

## [RXPLL-A UNIT]

| REF NO. | PARTS NO. | DESCRIPTION | M. | H/V LOCATION |
|---|---|---|---|---|
| R1359 | 7030010980 | S.RES ERA3YHD 470V (47) | T | 139.5/64.7 |
| R1360 | 7030007230 | S.RES ERA3YED 102V (1K) | B | 146.4/67.2 |
| R1361 | 7030003380 | S.RES ERJ3GEYJ 331 V (330) | T | 139.3/68.8 |
| R1362 | 7030005871 | S.RES ERA3YKD 104V (100K) | B | 144.6/70.5 |
| R1401 | 7030003200 | S.RES ERJ3GEYJ 100 V (10) | T | 131.5/103.4 |
| R1402 | 7030003300 | S.RES ERJ3GEYJ 680 V (68) | T | 126.4/111.0 |
| R1403 | 7030007230 | S.RES ERA3YED 102V (1K) | T | 132.0/107.7 |
| R1404 | 7030009861 | S.RES ERA3YED 471V (470) | T | 134.7/104.3 |
| R1405 | 7030003340 | S.RES ERJ3GEYJ 151 V (150) | T | 137.3/104.3 |
| R1406 | 7030009591 | S.RES ERA3YED 472V (4.7K) | T | 135.2/106.3 |
| R1407 | 7030003550 | S.RES ERJ3GEYJ 822 V (8.2K) | B | 135.5/104.4 |
| R1408 | 7030003200 | S.RES ERJ3GEYJ 100 V (10) | T | 121.0/109.0 |
| R1409 | 7030009591 | S.RES ERA3YED 472V (4.7K) | T | 120.6/114.9 |
| R1410 | 7030006091 | S.RES ERA3YED 822V (8.2K) | B | 124.2/114.4 |
| R1411 | 7030005871 | S.RES ERA3YKD 104V (100K) | T | 123.3/116.2 |
| R1412 | 7030003200 | S.RES ERJ3GEYJ 100 V (10) | T | 126.4/112.3 |
| R1413 | 7030003200 | S.RES ERJ3GEYJ 100 V (10) | T | 126.4/113.6 |
| R1414 | 7030005871 | S.RES ERA3YKD 104V (100K) | B | 120.9/114.4 |
| R1415 | 7030010980 | S.RES ERA3YHD 470V (47) | T | 127.1/114.9 |
| R1416 | 7030003320 | S.RES ERJ3GEYJ 101 V (100) | B | 139.7/123.0 |
| R1417 | 7030000010 | S.RES MCR10EZHJ JPW (000) | B | 130.1/124.5 |
| R1418 | 7030000010 | S.RES MCR10EZHJ JPW (000) | B | 130.1/122.6 |
| R1419 | 7030003860 | S.RES ERJ3GE JPW V | B | 129.5/114.9 |
| R1501 | 7030010980 | S.RES ERA3YHD 470V (47) | T | 126.5/125.3 |
| R1502 | 7030009841 | S.RES ERA3YHD 330V (33) | T | 133.1/131.1 |
| R1503 | 7030009851 | S.RES ERA3YED 271V (270) | T | 130.0/146.3 |
| R1504 | 7030011050 | S.RES ERA3YHD 100V (10) | T | 131.3/143.5 |
| R1505 | 7030006091 | S.RES ERA3YED 822V (8.2K) | B | 137.7/140.3 |
| R1506 | 7030007230 | S.RES ERA3YED 102V (1K) | B | 137.7/147.0 |
| R1507 | 7030007230 | S.RES ERA3YED 102V (1K) | T | 132.6/146.3 |
| R1508 | 7030007230 | S.RES ERA3YED 102V (1K) | T | 133.9/146.3 |
| R1509 | 7030007230 | S.RES ERA3YED 102V (1K) | T | 139.1/158.9 |
| R1510 | 7030005321 | S.RES ERA3YED 103V (10K) | T | 139.1/157.6 |
| R1511 | 7030009861 | S.RES ERA3YED 471V (470) | T | 136.5/157.6 |
| R1512 | 7030003380 | S.RES ERJ3GEYJ 331 V (330) | T | 129.6/151.6 |
| R1513 | 7030003380 | S.RES ERJ3GEYJ 331 V (330) | T | 129.6/155.5 |
| R1514 | 7030005321 | S.RES ERA3YED 103V (10K) | T | 129.6/160.8 |
| R1515 | 7030005321 | S.RES ERA3YED 103V (10K) | T | 133.5/160.8 |
| R1516 | 7310005380 | S.TRI EVM3VB13 1K (1K) | T | 119.2/157.7 |
| R1517 | 7030005321 | S.RES ERA3YED 103V (10K) | T | 115.3/158.0 |
| R1518 | 7030005321 | S.RES ERA3YED 103V (10K) | T | 134.8/160.8 |
| R1519 | 7030005321 | S.RES ERA3YED 103V (10K) | T | 131.7/171.7 |
| R1520 | 7030005321 | S.RES ERA3YED 103V (10K) | T | 136.1/160.8 |
| R1521 | 7030010980 | S.RES ERA3YHD 470V (47) | T | 126.6/133.0 |
| R1522 | 7030009841 | S.RES ERA3YHD 330V (33) | T | 126.1/141.2 |
| R1523 | 7030009851 | S.RES ERA3YED 271V (270) | T | 123.7/146.3 |
| R1524 | 7030011050 | S.RES ERA3YHD 100V (10) | T | 122.4/143.5 |
| R1525 | 7030007230 | S.RES ERA3YED 102V (1K) | B | 128.8/147.0 |
| R1526 | 7030003460 | S.RES ERJ3GEYJ 152 V (1.5K) | B | 137.7/142.1 |
| R1527 | 7030007230 | S.RES ERA3YED 102V (1K) | T | 119.8/146.3 |
| R1528 | 7030007230 | S.RES ERA3YED 102V (1K) | T | 121.1/146.3 |
| R1529 | 7030007230 | S.RES ERA3YED 102V (1K) | T | 115.3/152.3 |
| R1530 | 7030003380 | S.RES ERJ3GEYJ 331 V (330) | T | 128.0/151.6 |
| R1531 | 7030003380 | S.RES ERJ3GEYJ 331 V (330) | T | 128.0/155.5 |
| R1532 | 7030005321 | S.RES ERA3YED 103V (10K) | T | 124.1/160.8 |
| R1533 | 7030005321 | S.RES ERA3YED 103V (10K) | T | 128.0/160.8 |
| R1534 | 7030005321 | S.RES ERA3YED 103V (10K) | T | 122.8/160.8 |
| R1535 | 7030005321 | S.RES ERA3YED 103V (10K) | T | 121.5/160.8 |
| R1536 | 7030005321 | S.RES ERA3YED 103V (10K) | T | 129.0/171.7 |
| R1537 | 7030003320 | S.RES ERJ3GEYJ 101 V (100) | T | 115.5/164.5 |
| R1538 | 7030003320 | S.RES ERJ3GEYJ 101 V (100) | T | 107.1/170.1 |
| R1539 | 7030008061 | S.RES ERA3YED 222V (2.2K) | B | 131.8/176.4 |
| R1540 | 7030010390 | S.RES ERA3YED 821V (820) | B | 128.7/177.1 |
| R1541 | 7030003320 | S.RES ERJ3GEYJ 101 V (100) | T | 107.1/178.8 |
| R1542 | 7030003320 | S.RES ERJ3GEYJ 101 V (100) | T | 115.5/173.2 |
| R1543 | 7030009691 | S.RES ERA3YED 101V (100) | B | 130.6/179.0 |
| R1651 | 7030003380 | S.RES ERJ3GEYJ 331 V (330) | B | 101.0/144.8 |
| R1652 | 7030003220 | S.RES ERJ3GEYJ 150 V (15) | B | 102.7/144.8 |
| R1653 | 7030003380 | S.RES ERJ3GEYJ 331 V (330) | B | 102.0/143.0 |
| R1654 | 7030010980 | S.RES ERA3YHD 470V (47) | B | 105.5/142.3 |
| R1655 | 7030009861 | S.RES ERA3YED 471V (470) | B | 108.9/140.1 |
| R1656 | 7030003630 | S.RES ERJ3GEYJ 393 V (39K) | B | 108.3/142.3 |
| R1657 | 7030005871 | S.RES ERA3YKD 104V (100K) | T | 108.0/133.2 |
| R1658 | 7030003320 | S.RES ERJ3GEYJ 101 V (100) | T | 110.6/133.2 |
| R1659 | 7030009691 | S.RES ERA3YED 101V (100) | T | 115.9/125.0 |
| R1660 | 7030009691 | S.RES ERA3YED 101V (100) | T | 115.9/128.8 |
| R1661 | 7030005321 | S.RES ERA3YED 103V (10K) | T | 135.1/175.4 |
| R1662 | 7030005321 | S.RES ERA3YED 103V (10K) | T | 135.2/172.8 |
| R1663 | 7030005321 | S.RES ERA3YED 103V (10K) | T | 144.3/175.4 |
| R1664 | 7030005321 | S.RES ERA3YED 103V (10K) | T | 139.9/172.1 |
| R1665 | 7030003320 | S.RES ERJ3GEYJ 101 V (100) | T | 109.3/133.2 |
| R1667 | 7030003360 | S.RES ERJ3GEYJ 221 V (220) | T | 139.2/170.2 |
| R1668 | 7030003360 | S.RES ERJ3GEYJ 221 V (220) | T | 141.8/170.2 |
| R1670 | 7030003800 | S.RES ERJ3GEYJ 105 V (1M) | T | 140.2/164.1 |
| R1673 | 7030007230 | S.RES ERA3YED 102V (1K) | B | 146.0/174.5 |
| R1674 | 7030003370 | S.RES ERJ3GEYJ 271 V (270) | B | 145.1/177.1 |
| R1675 | 7030009591 | S.RES ERA3YED 472V (4.7K) | T | 136.6/170.2 |
| R1677 | 7030009591 | S.RES ERA3YED 472V (4.7K) | T | 143.1/170.2 |
| R1701 | 7030003360 | S.RES ERJ3GEYJ 221 V (220) | T | 162.4/147.4 |
| R1703 | 7030003360 | S.RES ERJ3GEYJ 221 V (220) | T | 159.8/147.4 |
| R1704 | 7030003360 | S.RES ERJ3GEYJ 221 V (220) | T | 158.5/147.4 |
| R1706 | 7030003360 | S.RES ERJ3GEYJ 221 V (220) | T | 155.9/147.4 |
| R1707 | 7030003360 | S.RES ERJ3GEYJ 221 V (220) | T | 154.6/147.4 |
| R1708 | 7030003360 | S.RES ERJ3GEYJ 221 V (220) | T | 153.3/147.4 |
| R1709 | 7030003480 | S.RES ERJ3GEYJ 222 V (2.2K) | T | 149.7/159.3 |
| R1710 | 7030003480 | S.RES ERJ3GEYJ 222 V (2.2K) | T | 148.4/159.3 |
| R1711 | 7030003540 | S.RES ERJ3GEYJ 682 V (6.8K) | T | 147.1/159.3 |
| R1712 | 7030003540 | S.RES ERJ3GEYJ 682 V (6.8K) | T | 145.8/159.3 |
| R1713 | 7030003660 | S.RES ERJ3GEYJ 683 V (68K) | T | 145.8/157.2 |
| R1714 | 7030003660 | S.RES ERJ3GEYJ 683 V (68K) | T | 145.8/155.9 |
| R1715 | 7030003540 | S.RES ERJ3GEYJ 682 V (6.8K) | T | 143.9/164.9 |
| R1716 | 7030007230 | S.RES ERA3YED 102V (1K) | T | 164.2/164.8 |
| R1717 | 7030007230 | S.RES ERA3YED 102V (1K) | T | 164.2/163.5 |
| R1718 | 7030007230 | S.RES ERA3YED 102V (1K) | T | 164.2/162.2 |
| R1719 | 7030003660 | S.RES ERJ3GEYJ 683 V (68K) | T | 144.4/166.8 |

Eqv.= This component is equivalent to the REF No. component listed above, and may be substituted on parts orders and repairs.

M.=Mounted side (T: Mounted on the Top side, B: Mounted on the Bottom side)
S.=Surface mount

## [RXPLL-A UNIT]

| REF NO. | PARTS NO. | DESCRIPTION | M. | H/V LOCATION |
|---|---|---|---|---|
| C1 | 4030011600 | S.CER C1608 JB 1E 104K-T | T | 10.8/18.2 |
| C2 | 4030006880 | S.CER C1608 JB 1H 472K-T | T | 25.7/29.5 |
| C14 | 4030006880 | S.CER C1608 JB 1H 472K-T | T | 37.7/12.5 |
| C15 | 4030006880 | S.CER C1608 JB 1H 472K-T | T | 31.2/15.4 |
| C16 | 4030006880 | S.CER C1608 JB 1H 472K-T | T | 35.1/15.4 |
| C17 | 4030006880 | S.CER C1608 JB 1H 472K-T | T | 13.8/12.6 |
| C18 | 4030006880 | S.CER C1608 JB 1H 472K-T | T | 16.8/12.6 |
| C19 | 4030006880 | S.CER C1608 JB 1H 472K-T | T | 29.5/12.6 |
| C20 | 4030006880 | S.CER C1608 JB 1H 472K-T | T | 87.4/127.9 |
| C21 | 4030006880 | S.CER C1608 JB 1H 472K-T | T | 88.7/127.9 |
| C22 | 4030006880 | S.CER C1608 JB 1H 472K-T | T | 90.0/127.9 |
| C30 | 4030011600 | S.CER C1608 JB 1E 104K-T | T | 19.1/112.4 |
| C31 | 4030011600 | S.CER C1608 JB 1E 104K-T | T | 20.4/113.7 |
| C32 | 4030011600 | S.CER C1608 JB 1E 104K-T | T | 24.3/111.1 |
| C51 | 4510008520 | S.ELE EEE1CA470SP | T | 84.0/20.3 |
| C52 | 4030011600 | S.CER C1608 JB 1E 104K-T | T | 78.9/23.7 |
| C53 | 4030011600 | S.CER C1608 JB 1E 104K-T | T | 75.1/23.7 |
| C54 | 4510008500 | S.ELE EEE1CA101WP | T | 70.0/20.3 |
| C61 | 4510008520 | S.ELE EEE1CA470SP | T | 62.9/20.3 |
| C62 | 4030011600 | S.CER C1608 JB 1E 104K-T | B | 58.2/19.9 |
| C63 | 4030011600 | S.CER C1608 JB 1E 104K-T | B | 54.8/19.9 |
| C64 | 4510008500 | S.ELE EEE1CA101WP | T | 50.1/20.3 |
| C101 | 4030006880 | S.CER C1608 JB 1H 472K-T | T | 39.7/80.7 |
| C102 | 4030011600 | S.CER C1608 JB 1E 104K-T | T | 41.8/79.9 |
| C103 | 4510008540 | S.ELE EEE1CA100SR | T | 40.2/76.8 |
| C104 | 4030011600 | S.CER C1608 JB 1E 104K-T | T | 21.4/100.2 |
| C105 | 4030011600 | S.CER C1608 JB 1E 104K-T | T | 21.4/88.2 |
| C106 | 4030011600 | S.CER C1608 JB 1E 104K-T | T | 21.4/84.4 |
| C107 | 4030011600 | S.CER C1608 JB 1E 104K-T | T | 24.4/79.8 |
| C108 | 4030011600 | S.CER C1608 JB 1E 104K-T | T | 27.0/79.8 |
| C109 | 4030011600 | S.CER C1608 JB 1E 104K-T | T | 30.8/79.8 |
| C110 | 4030011600 | S.CER C1608 JB 1E 104K-T | T | 36.8/79.8 |
| C111 | 4030011600 | S.CER C1608 JB 1E 104K-T | T | 41.2/88.5 |
| C112 | 4030011600 | S.CER C1608 JB 1E 104K-T | T | 41.3/82.6 |
| C114 | 4030011600 | S.CER C1608 JB 1E 104K-T | T | 39.6/98.5 |
| C115 | 4030011600 | S.CER C1608 JB 1E 104K-T | T | 38.2/98.5 |
| C116 | 4030011600 | S.CER C1608 JB 1E 104K-T | T | 35.3/99.7 |
| C117 | 4030011600 | S.CER C1608 JB 1E 104K-T | T | 23.3/98.8 |
| C118 | 4030011600 | S.CER C1608 JB 1E 104K-T | T | 42.6/82.6 |
| C119 | 4030011600 | S.CER C1608 JB 1E 104K-T | B | 31.2/86.7 |
| C120 | 4030006880 | S.CER C1608 JB 1H 472K-T | T | 36.8/101.5 |
| C121 | 4030011600 | S.CER C1608 JB 1E 104K-T | T | 39.6/101.5 |
| C125 | 4030011600 | S.CER C1608 JB 1E 104K-T | T | 14.6/83.1 |
| C129 | 4030011600 | S.CER C1608 JB 1E 104K-T | T | 33.4/79.8 |
| C130 | 4030017810 | S.CER C1608 CH 1H 102J-T | B | 47.6/106.6 |
| C131 | 4030011600 | S.CER C1608 JB 1E 104K-T | T | 30.4/73.2 |
| C132 | 4030011600 | S.CER C1608 JB 1E 104K-T | T | 35.5/73.2 |
| C133 | 4030006880 | S.CER C1608 JB 1H 472K-T | B | 43.5/98.6 |
| C134 | 4030006880 | S.CER C1608 JB 1H 472K-T | B | 43.5/96.8 |
| C135 | 4030006880 | S.CER C1608 JB 1H 472K-T | T | 46.1/95.5 |
| C136 | 4030006880 | S.CER C1608 JB 1H 472K-T | T | 46.1/94.2 |
| C137 | 4030006880 | S.CER C1608 JB 1H 472K-T | T | 46.1/90.3 |
| C138 | 4030006880 | S.CER C1608 JB 1H 472K-T | T | 46.2/87.7 |
| C139 | 4030006880 | S.CER C1608 JB 1H 472K-T | B | 43.5/100.4 |
| C140 | 4030006880 | S.CER C1608 JB 1H 472K-T | B | 43.5/102.2 |
| C141 | 4030004740 | S.CER C2012 JB 1H 472K-T | B | 34.4/85.2 |
| C142 | 4550007470 | S.TAN F931A107MNMBMA | B | 19.5/87.5 |
| C150 | 4340000050 | S.MYL ECH-U 1C472JB5 | T | 16.4/64.6 |
| C151 | 4550007520 | S.TAN F931A106MAABMA | B | 38.6/92.1 |
| C152 | 4030007070 | S.CER C1608 CH 1H 330J-T | T | 19.2/59.9 |
| C153 | 4030009910 | S.CER C1608 CH 1H 040B-T | T | 21.3/55.4 |
| C154 | 4610001850 | S.TRI TZB4R200AB10R00 (TZBX4R200BA110) | T | 17.6/55.1 |
| C155 | 4030016550 | S.CER CM105 CH 151G 50AT | T | 24.1/55.4 |
| C156 | 4030016550 | S.CER CM105 CH 151G 50AT | T | 26.9/55.4 |
| C157 | 4030016550 | S.CER CM105 CH 151G 50AT | T | 26.9/56.7 |
| C158 | 4030006880 | S.CER C1608 JB 1H 472K-T | T | 23.3/53.1 |
| C159 | 4030006880 | S.CER C1608 JB 1H 472K-T | B | 23.0/51.9 |
| C161 | 4510008540 | S.ELE EEE1CA100SR | T | 31.3/61.0 |
| C162 | 4030009920 | S.CER C1608 CH 1H 050B-T | B | 33.6/53.0 |
| C163 | 4030011600 | S.CER C1608 JB 1E 104K-T | B | 36.9/59.6 |
| C164 | 4030006880 | S.CER C1608 JB 1H 472K-T | B | 30.3/54.8 |
| C165 | 4030006880 | S.CER C1608 JB 1H 472K-T | B | 30.8/74.0 |
| C166 | 4030011600 | S.CER C1608 JB 1E 104K-T | B | 34.9/78.3 |
| C167 | 4030006880 | S.CER C1608 JB 1H 472K-T | B | 37.4/74.0 |
| C201 | 4030011340 | S.CER C1608 CH 1H 471J-T | T | 33.8/40.5 |
| C202 | 4510009280 | S.ELE EEE1EA4R7SR | T | 26.5/44.0 |
| C203 | 4030006900 | S.CER C1608 JB 1H 103K-T | T | 32.5/38.3 |
| C204 | 4030006880 | S.CER C1608 JB 1H 472K-T | T | 25.4/35.3 |
| C205 | 4030006880 | S.CER C1608 JB 1H 472K-T | T | 25.4/34.0 |
| C206 | 4030006880 | S.CER C1608 JB 1H 472K-T | T | 31.1/43.0 |
| C207 | 4030007030 | S.CER C1608 CH 1H 150J-T | B | 46.8/32.4 |
| C208 | 4030007030 | S.CER C1608 CH 1H 150J-T | T | 32.5/41.0 |
| C209 | 4030011340 | S.CER C1608 CH 1H 471J-T | T | 44.1/26.1 |
| C210 | 4550008150 | S.TAN F921V224MAA | T | 46.2/26.7 |
| Eqv. | 4550000550 | S.TAN TEESVA 1V 224M8R | | |
| C211 | 4550007300 | S.TAN F931A335MAABMA | B | 46.1/41.6 |
| C219 | 4030006880 | S.CER C1608 JB 1H 472K-T | T | 33.8/37.8 |
| C220 | 4030007130 | S.CER C1608 CH 1H 101J-T | T | 54.7/37.6 |
| C221 | 4030009910 | S.CER C1608 CH 1H 040B-T | T | 54.7/32.0 |
| C222 | 4610001860 | S.TRI TZB4Z060AB10R00 (TZBX4Z060BA110) | T | 68.1/32.6 |
| C223 | 4030007080 | S.CER C1608 CH 1H 390J-T | T | 73.2/36.3 |
| C224 | 4030007010 | S.CER C1608 CH 1H 100D-T | T | 73.2/38.9 |
| C225 | 4030007050 | S.CER C1608 CH 1H 220J-T | T | 73.6/30.9 |
| C226 | 4030006880 | S.CER C1608 JB 1H 472K-T | T | 71.0/30.9 |
| C227 | 4030009920 | S.CER C1608 CH 1H 050B-T | T | 75.1/32.6 |
| C228 | 4510008540 | S.ELE EEE1CA100SR | T | 68.8/37.8 |
| C229 | 4030009530 | S.CER C1608 CH 1H 030B-T | T | 77.8/32.6 |
| C230 | 4030007100 | S.CER C1608 CH 1H 560J-T | T | 54.7/50.0 |
| C231 | 4030009520 | S.CER C1608 CH 1H 020B-T | T | 54.7/44.6 |
| C232 | 4610001860 | S.TRI TZB4Z060AB10R00 (TZBX4Z060BA110) | T | 68.1/45.1 |
| C233 | 4030007070 | S.CER C1608 CH 1H 330J-T | T | 73.2/48.8 |
| C234 | 4030009920 | S.CER C1608 CH 1H 050B-T | T | 73.2/51.4 |

## [RXPLL-A UNIT]

| REF NO. | PARTS NO. | DESCRIPTION | M. | H/V LOCATION |
|---|---|---|---|---|
| C235 | 4030007020 | S.CER C1608 CH 1H 120J-T | T | 73.6/43.3 |
| C236 | 4030006880 | S.CER C1608 JB 1H 472K-T | T | 71.0/43.3 |
| C237 | 4030009910 | S.CER C1608 CH 1H 040B-T | T | 75.1/45.0 |
| C238 | 4510008540 | S.ELE EEE1CA100SR | T | 68.8/50.3 |
| C239 | 4030009910 | S.CER C1608 CH 1H 040B-T | T | 77.8/45.0 |
| C240 | 4030007080 | S.CER C1608 CH 1H 390J-T | T | 54.7/62.5 |
| C241 | 4030009510 | S.CER C1608 CH 1H 010B-T | T | 54.7/57.1 |
| C242 | 4610001860 | S.TRI TZB4Z060AB10R00 (TZBX4Z060BA110) | T | 68.1/57.6 |
| C243 | 4030007060 | S.CER C1608 CH 1H 270J-T | T | 73.2/61.3 |
| C244 | 4030009910 | S.CER C1608 CH 1H 040B-T | T | 73.2/63.9 |
| C245 | 4030009920 | S.CER C1608 CH 1H 050B-T | T | 73.6/55.8 |
| C246 | 4030006880 | S.CER C1608 JB 1H 472K-T | T | 71.0/55.9 |
| C247 | 4030009530 | S.CER C1608 CH 1H 030B-T | T | 75.1/57.5 |
| C248 | 4510008540 | S.ELE EEE1CA100SR | T | 68.8/62.9 |
| C250 | 4030007100 | S.CER C1608 CH 1H 560J-T | T | 54.7/75.0 |
| C251 | 4030009540 | S.CER C1608 CH 1H 1R5B-T | T | 54.7/69.6 |
| C252 | 4610001810 | S.TRI TZB4Z030AB10R00 (TZBX4Z030BA110) | T | 68.1/70.1 |
| C253 | 4030007080 | S.CER C1608 CH 1H 390J-T | T | 73.2/73.8 |
| C254 | 4030009530 | S.CER C1608 CH 1H 030B-T | T | 73.2/76.4 |
| C255 | 4030006990 | S.CER C1608 CH 1H 080D-T | T | 73.6/68.4 |
| C256 | 4030006880 | S.CER C1608 JB 1H 472K-T | T | 71.0/68.4 |
| C257 | 4030007010 | S.CER C1608 CH 1H 100D-T | T | 75.1/70.0 |
| C258 | 4510008540 | S.ELE EEE1CA100SR | T | 68.8/75.4 |
| C260 | 4030007110 | S.CER C1608 CH 1H 680J-T | T | 54.7/87.5 |
| C262 | 4610001810 | S.TRI TZB4Z030AB10R00 (TZBX4Z030BA110) | T | 68.1/82.6 |
| C263 | 4030007080 | S.CER C1608 CH 1H 390J-T | T | 73.2/86.3 |
| C264 | 4030009530 | S.CER C1608 CH 1H 030B-T | T | 73.2/88.9 |
| C265 | 4030011770 | S.CER C1608 CH 1H 060B-T | T | 73.6/80.9 |
| C266 | 4030006880 | S.CER C1608 JB 1H 472K-T | T | 71.0/80.9 |
| C267 | 4030007010 | S.CER C1608 CH 1H 100D-T | T | 75.1/82.5 |
| C268 | 4510008540 | S.ELE EEE1CA100SR | T | 68.8/87.9 |
| C272 | 4610001860 | S.TRI TZB4Z060AB10R00 (TZBX4Z060BA110) | T | 68.1/95.1 |
| C273 | 4030007050 | S.CER C1608 CH 1H 220J-T | T | 73.2/98.2 |
| C274 | 4030009530 | S.CER C1608 CH 1H 030B-T | T | 73.2/100.8 |
| C275 | 4030009920 | S.CER C1608 CH 1H 050B-T | T | 73.6/92.8 |
| C276 | 4030006880 | S.CER C1608 JB 1H 472K-T | T | 71.0/92.8 |
| C277 | 4030007010 | S.CER C1608 CH 1H 100D-T | T | 75.1/95.0 |
| C278 | 4510008540 | S.ELE EEE1CA100SR | T | 68.8/100.4 |
| C283 | 4030017810 | S.CER C1608 CH 1H 102J-T | T | 82.1/36.3 |
| C284 | 4030006880 | S.CER C1608 JB 1H 472K-T | T | 84.5/34.3 |
| C285 | 4030017810 | S.CER C1608 CH 1H 102J-T | T | 82.1/48.8 |
| C286 | 4030006880 | S.CER C1608 JB 1H 472K-T | T | 84.5/46.9 |
| C287 | 4030017810 | S.CER C1608 CH 1H 102J-T | T | 82.1/61.3 |
| C288 | 4030006880 | S.CER C1608 JB 1H 472K-T | T | 83.9/57.5 |
| C289 | 4030017810 | S.CER C1608 CH 1H 102J-T | T | 82.1/73.8 |
| C290 | 4030006880 | S.CER C1608 JB 1H 472K-T | T | 84.3/70.5 |
| C291 | 4030017810 | S.CER C1608 CH 1H 102J-T | T | 82.1/86.3 |
| C292 | 4030006880 | S.CER C1608 JB 1H 472K-T | T | 84.5/84.4 |
| C293 | 4030017810 | S.CER C1608 CH 1H 102J-T | T | 82.2/98.8 |
| C294 | 4030006880 | S.CER C1608 JB 1H 472K-T | T | 83.2/94.0 |
| C297 | 4030009920 | S.CER C1608 CH 1H 050B-T | T | 52.7/59.4 |
| C299 | 4030007050 | S.CER C1608 CH 1H 220J-T | T | 52.7/84.4 |
| C301 | 4030006880 | S.CER C1608 JB 1H 472K-T | T | 89.3/30.6 |
| C302 | 4030006880 | S.CER C1608 JB 1H 472K-T | T | 94.9/28.0 |
| C303 | 4030006880 | S.CER C1608 JB 1H 472K-T | B | 92.6/39.8 |
| C304 | 4030006880 | S.CER C1608 JB 1H 472K-T | B | 92.6/45.2 |
| C305 | 4030006880 | S.CER C1608 JB 1H 472K-T | B | 89.1/48.8 |
| C306 | 4030006880 | S.CER C1608 JB 1H 472K-T | B | 89.1/50.6 |
| C309 | 4030017810 | S.CER C1608 CH 1H 102J-T | T | 94.9/42.7 |
| C310 | 4030011600 | S.CER C1608 JB 1E 104K-T | T | 92.9/42.2 |
| C311 | 4510008520 | S.ELE EEE1CA470SP | T | 93.4/47.4 |
| C312 | 4030006880 | S.CER C1608 JB 1H 472K-T | B | 89.0/27.4 |
| C313 | 4030006880 | S.CER C1608 JB 1H 472K-T | B | 93.8/23.1 |
| C331 | 4030007110 | S.CER C1608 CH 1H 680J-T | T | 89.3/32.2 |
| C332 | 4030007160 | S.CER C1608 CH 1H 181J-T | T | 92.1/33.5 |
| C333 | 4030007110 | S.CER C1608 CH 1H 680J-T | T | 89.3/33.5 |
| C334 | 4030007050 | S.CER C1608 CH 1H 220J-T | T | 94.9/36.0 |
| C335 | 4030006980 | S.CER C1608 CH 1H 070D-T | T | 94.9/37.4 |
| C336 | 4030007030 | S.CER C1608 CH 1H 150J-T | T | 92.1/38.8 |
| C337 | 4030007050 | S.CER C1608 CH 1H 220J-T | T | 94.9/38.8 |
| C341 | 4030006880 | S.CER C1608 JB 1H 472K-T | T | 94.9/40.1 |
| C342 | 4030006880 | S.CER C1608 JB 1H 472K-T | T | 86.5/33.5 |
| C344 | 4030011600 | S.CER C1608 JB 1E 104K-T | T | 94.9/41.4 |
| C351 | 4030017810 | S.CER C1608 CH 1H 102J-T | T | 94.9/61.6 |
| C352 | 4030011600 | S.CER C1608 JB 1E 104K-T | T | 94.9/62.9 |
| C353 | 4510008520 | S.ELE EEE1CA470SP | T | 93.4/67.1 |
| C354 | 4030006880 | S.CER C1608 JB 1H 472K-T | T | 89.3/51.7 |
| C355 | 4030006880 | S.CER C1608 JB 1H 472K-T | T | 94.9/55.1 |
| C356 | 4030006880 | S.CER C1608 JB 1H 472K-T | T | 89.3/58.4 |
| C357 | 4030006880 | S.CER C1608 JB 1H 472K-T | T | 94.9/57.7 |
| C358 | 4030006880 | S.CER C1608 JB 1H 472K-T | B | 89.2/60.3 |
| C359 | 4030006880 | S.CER C1608 JB 1H 472K-T | B | 92.6/62.1 |
| C360 | 4030006880 | S.CER C1608 JB 1H 472K-T | B | 89.9/66.9 |
| C361 | 4030006880 | S.CER C1608 JB 1H 472K-T | T | 89.4/83.5 |
| C363 | 4030006880 | S.CER C1608 JB 1H 472K-T | T | 86.1/60.9 |
| C364 | 4030017810 | S.CER C1608 CH 1H 102J-T | T | 86.7/52.3 |
| C365 | 4030006880 | S.CER C1608 JB 1H 472K-T | T | 90.3/59.9 |
| C421 | 4030006880 | S.CER C1608 JB 1H 472K-T | T | 94.1/88.5 |
| C422 | 4030006880 | S.CER C1608 JB 1H 472K-T | T | 87.3/88.5 |
| C423 | 4030006880 | S.CER C1608 JB 1H 472K-T | T | 94.1/93.3 |
| C424 | 4030006880 | S.CER C1608 JB 1H 472K-T | T | 87.9/93.3 |
| C425 | 4030006880 | S.CER C1608 JB 1H 472K-T | T | 92.8/93.3 |
| C426 | 4030006880 | S.CER C1608 JB 1H 472K-T | B | 94.6/87.3 |
| C427 | 4030006880 | S.CER C1608 JB 1H 472K-T | T | 92.1/86.6 |
| C428 | 4030006880 | S.CER C1608 JB 1H 472K-T | T | 89.3/86.6 |
| C441 | 4030007040 | S.CER C1608 CH 1H 180J-T | T | 94.9/71.3 |
| C442 | 4030007040 | S.CER C1608 CH 1H 180J-T | T | 94.9/72.6 |
| C443 | 4030007020 | S.CER C1608 CH 1H 120J-T | T | 92.1/74.3 |
| C444 | 4030007080 | S.CER C1608 CH 1H 390J-T | T | 94.9/73.9 |
| C445 | 4030011770 | S.CER C1608 CH 1H 060B-T | T | 94.9/75.2 |
| C446 | 4030007060 | S.CER C1608 CH 1H 270J-T | T | 94.9/79.1 |

Eqv.= This component is equivalent to the REF No. component listed above, and may be substituted on parts orders and repairs.

M.=Mounted side (T: Mounted on the Top side, B: Mounted on the Bottom side)
S.=Surface mount

## [RXPLL-A UNIT]

| REF NO. | PARTS NO. | DESCRIPTION | M. | H/V LOCATION |
|---|---|---|---|---|
| C447 | 4030007110 | S.CER C1608 CH 1H 680J-T | T | 92.8/79.0 |
| C448 | 4030006880 | S.CER C1608 JB 1H 472K-T | T | 94.9/76.5 |
| C449 | 4030006880 | S.CER C1608 JB 1H 472K-T | T | 88.2/69.1 |
| C451 | 4030007110 | S.CER C1608 CH 1H 680J-T | T | 92.0/82.2 |
| C452 | 4030007160 | S.CER C1608 CH 1H 181J-T | T | 92.0/80.9 |
| C453 | 4030011600 | S.CER C1608 JB 1E 104K-T | T | 94.9/77.8 |
| C501 | 4030006880 | S.CER C1608 JB 1H 472K-T | T | 38.9/131.2 |
| C502 | 4030011600 | S.CER C1608 JB 1E 104K-T | T | 38.9/129.9 |
| C503 | 4510008540 | S.ELE EEE1CA100SR | T | 36.6/126.7 |
| C504 | 4030011600 | S.CER C1608 JB 1E 104K-T | T | 21.4/153.1 |
| C505 | 4550007470 | S.TAN F931A107MNMBMA | B | 19.2/140.3 |
| C506 | 4030011600 | S.CER C1608 JB 1E 104K-T | T | 21.4/141.0 |
| C507 | 4030011600 | S.CER C1608 JB 1E 104K-T | T | 21.4/137.1 |
| C509 | 4030011600 | S.CER C1608 JB 1E 104K-T | T | 25.8/132.6 |
| C510 | 4030011600 | S.CER C1608 JB 1E 104K-T | T | 28.4/132.6 |
| C511 | 4030011600 | S.CER C1608 JB 1E 104K-T | T | 32.2/132.6 |
| C512 | 4030011600 | S.CER C1608 JB 1E 104K-T | T | 34.8/132.6 |
| C513 | 4030011600 | S.CER C1608 JB 1E 104K-T | T | 37.4/132.6 |
| C514 | 4030011600 | S.CER C1608 JB 1E 104K-T | T | 41.2/136.1 |
| C515 | 4030011600 | S.CER C1608 JB 1E 104K-T | T | 41.3/139.7 |
| C516 | 4030011600 | S.CER C1608 JB 1E 104K-T | T | 41.3/142.3 |
| C517 | 4030011600 | S.CER C1608 JB 1E 104K-T | T | 37.6/151.8 |
| C518 | 4030011600 | S.CER C1608 JB 1E 104K-T | T | 34.8/151.8 |
| C519 | 4030011600 | S.CER C1608 JB 1E 104K-T | T | 31.2/151.8 |
| C520 | 4030011600 | S.CER C1608 JB 1E 104K-T | T | 23.3/151.9 |
| C521 | 4030011600 | S.CER C1608 JB 1E 104K-T | T | 41.6/134.0 |
| C522 | 4550007220 | S.TAN F931A476MCMBMA | B | 40.7/145.0 |
| C525 | 4030006880 | S.CER C1608 JB 1H 472K-T | T | 35.4/154.5 |
| C526 | 4030011600 | S.CER C1608 JB 1E 104K-T | T | 36.7/154.5 |
| C531 | 4030006880 | S.CER C1608 JB 1H 472K-T | T | 14.6/137.5 |
| C532 | 4030007070 | S.CER C1608 CH 1H 330J-T | T | 17.2/137.5 |
| C533 | 4030007110 | S.CER C1608 CH 1H 680J-T | T | 17.3/133.4 |
| C534 | 4030007110 | S.CER C1608 CH 1H 680J-T | T | 16.8/130.1 |
| C535 | 4030007070 | S.CER C1608 CH 1H 330J-T | T | 18.1/127.0 |
| C536 | 4030006880 | S.CER C1608 JB 1H 472K-T | T | 20.9/127.6 |
| C537 | 4030006880 | S.CER C1608 JB 1H 472K-T | T | 27.2/126.4 |
| C540 | 4030006880 | S.CER C1608 JB 1H 472K-T | B | 56.3/142.8 |
| C541 | 4510008540 | S.ELE EEE1CA100SR | T | 51.0/139.3 |
| C542 | 4340000260 | S.MYL ECPU1C104MA5 | B | 47.8/128.7 |
| C543 | 4030007060 | S.CER C1608 CH 1H 270J-T | T | 62.2/136.4 |
| C545 | 4030008560 | S.CER C1608 CH 1H 300J-T | T | 70.0/137.1 |
| C546 | 4610001830 | S.TRI TZB4S100AB10R00 (TZBX4N100BA110) | T | 65.8/138.7 |
| C547 | 4030007130 | S.CER C1608 CH 1H 101J-T | T | 71.3/137.1 |
| C548 | 4030007010 | S.CER C1608 CH 1H 100D-T | T | 71.3/139.9 |
| C549 | 4030007050 | S.CER C1608 CH 1H 220J-T | T | 68.9/145.1 |
| C550 | 4030006880 | S.CER C1608 JB 1H 472K-T | T | 66.3/143.0 |
| C551 | 4030009520 | S.CER C1608 CH 1H 020B-T | T | 71.3/142.8 |
| C552 | 4030017810 | S.CER C1608 CH 1H 102J-T | B | 54.6/139.5 |
| C553 | 4030006880 | S.CER C1608 JB 1H 472K-T | B | 56.3/139.5 |
| C554 | 4510008500 | S.ELE EEE1CA101WP | T | 50.9/146.6 |
| C555 | 4030006880 | S.CER C1608 JB 1H 472K-T | B | 47.8/149.6 |
| C556 | 4550007220 | S.TAN F931A476MCMBMA | B | 76.4/136.1 |
| C558 | 4550007520 | S.TAN F931A106MAABMA | B | 43.4/132.5 |
| C559 | 4550007400 | S.TAN F931A225MAABMA | B | 43.4/129.9 |
| C561 | 4550007520 | S.TAN F931A106MAABMA | T | 70.1/157.6 |
| C562 | 4030006880 | S.CER C1608 JB 1H 472K-T | T | 68.3/155.5 |
| C563 | 4030017810 | S.CER C1608 CH 1H 102J-T | B | 60.1/158.1 |
| C564 | 4030006880 | S.CER C1608 JB 1H 472K-T | B | 58.8/158.1 |
| C565 | 4510008520 | S.ELE EEE1CA470SP | T | 50.9/155.6 |
| C566 | 4030006880 | S.CER C1608 JB 1H 472K-T | T | 64.4/155.5 |
| C571 | 4030006880 | S.CER C1608 JB 1H 472K-T | B | 58.5/161.3 |
| C573 | 4030007040 | S.CER C1608 CH 1H 180J-T | B | 72.5/166.8 |
| C574 | 4030009510 | S.CER C1608 CH 1H 010B-T | T | 72.6/169.1 |
| C575 | 4030007040 | S.CER C1608 CH 1H 180J-T | T | 72.6/171.9 |
| C580 | 4030006880 | S.CER C1608 JB 1H 472K-T | T | 41.9/152.4 |
| C581 | 4030006880 | S.CER C1608 JB 1H 472K-T | T | 41.9/144.2 |
| C591 | 4030006880 | S.CER C1608 JB 1H 472K-T | T | 63.5/171.2 |
| C592 | 4030007060 | S.CER C1608 CH 1H 270J-T | T | 62.8/163.1 |
| C593 | 4510008540 | S.ELE EEE1CA100SR | T | 54.4/170.7 |
| C594 | 4030006880 | S.CER C1608 JB 1H 472K-T | T | 57.5/171.9 |
| C596 | 4030006880 | S.CER C1608 JB 1H 472K-T | B | 63.7/168.1 |
| C597 | 4030007050 | S.CER C1608 CH 1H 220J-T | T | 62.2/171.2 |
| C604 | 4030011600 | S.CER C1608 JB 1E 104K-T | B | 50.7/111.0 |
| C605 | 4510008540 | S.ELE EEE1CA100SR | T | 52.5/110.9 |
| C651 | 4030006880 | S.CER C1608 JB 1H 472K-T | T | 13.5/174.0 |
| C652 | 4030011600 | S.CER C1608 JB 1E 104K-T | T | 12.8/176.3 |
| C653 | 4510008540 | S.ELE EEE1CA100SR | T | 6.8/172.6 |
| C654 | 4030011600 | S.CER C1608 JB 1E 104K-T | B | 17.4/170.5 |
| C655 | 4030011600 | S.CER C1608 JB 1E 104K-T | T | 25.9/161.4 |
| C656 | 4030011600 | S.CER C1608 JB 1E 104K-T | T | 25.8/177.1 |
| C657 | 4030011600 | S.CER C1608 JB 1E 104K-T | T | 31.7/169.3 |
| C658 | 4030011600 | S.CER C1608 JB 1E 104K-T | T | 13.5/172.7 |
| C659 | 4030011600 | S.CER C1608 JB 1E 104K-T | T | 16.5/163.4 |
| C660 | 4030006880 | S.CER C1608 JB 1H 472K-T | T | 17.6/161.4 |
| C661 | 4030011600 | S.CER C1608 JB 1E 104K-T | T | 13.3/166.1 |
| C662 | 4550007220 | S.TAN F931A476MCMBMA | B | 30.6/171.0 |
| C680 | 4030006880 | S.CER C1608 JB 1H 472K-T | T | 34.3/177.1 |
| C681 | 4030011340 | S.CER C1608 CH 1H 471J-T | T | 40.3/177.1 |
| C682 | 4030007120 | S.CER C1608 CH 1H 820J-T | T | 39.6/175.2 |
| C683 | 4030017870 | S.CER C1608 CH 1H 681J-T | T | 40.9/175.2 |
| C684 | 4030007070 | S.CER C1608 CH 1H 330J-T | B | 39.3/174.0 |
| C685 | 4030017800 | S.CER C1608 CH 1H 561J-T | B | 42.3/172.6 |
| C686 | 4030011280 | S.CER C1608 CH 1H 271J-T | B | 39.3/170.6 |
| C687 | 4030017810 | S.CER C1608 CH 1H 102J-T | T | 41.0/169.7 |
| C688 | 4030011280 | S.CER C1608 CH 1H 271J-T | B | 37.5/169.7 |
| C689 | 4030011600 | S.CER C1608 JB 1E 104K-T | T | 37.4/166.4 |
| C690 | 4030011600 | S.CER C1608 JB 1E 104K-T | T | 37.4/161.3 |
| C691 | 4030011600 | S.CER C1608 JB 1E 104K-T | T | 46.4/164.0 |
| C692 | 4030006880 | S.CER C1608 JB 1H 472K-T | T | 40.3/162.1 |
| C693 | 4030006880 | S.CER C1608 JB 1H 472K-T | B | 58.4/169.6 |
| C694 | 4030006880 | S.CER C1608 JB 1H 472K-T | B | 58.4/164.2 |
| C703 | 4030017810 | S.CER C1608 CH 1H 102J-T | T | 24.3/116.6 |
| C704 | 4030006880 | S.CER C1608 JB 1H 472K-T | T | 23.0/116.6 |
| C705 | 4510008500 | S.ELE EEE1CA101WP | T | 29.4/118.7 |

## [RXPLL-A UNIT]

| REF NO. | PARTS NO. | DESCRIPTION | M. | H/V LOCATION |
|---|---|---|---|---|
| C707 | 4030011600 | S.CER C1608 JB 1E 104K-T | T | 32.1/113.7 |
| C708 | 4030011600 | S.CER C1608 JB 1E 104K-T | T | 32.1/108.1 |
| C709 | 4030007070 | S.CER C1608 CH 1H 330J-T | T | 38.8/112.9 |
| C710 | 4030006880 | S.CER C1608 JB 1H 472K-T | T | 36.2/112.9 |
| C711 | 4030009540 | S.CER C1608 CH 1H 1R5B-T | B | 39.3/113.6 |
| C712 | 4030007070 | S.CER C1608 CH 1H 330J-T | T | 36.2/114.2 |
| C713 | 4030006880 | S.CER C1608 JB 1H 472K-T | T | 42.0/118.8 |
| C801 | 4030006880 | S.CER C1608 JB 1H 472K-T | T | 58.5/157.6 |
| C802 | 4030007030 | S.CER C1608 CH 1H 150J-T | T | 83.2/149.5 |
| C803 | 4030006900 | S.CER C1608 JB 1H 103K-T | T | 80.9/147.3 |
| C811 | 4030011600 | S.CER C1608 JB 1E 104K-T | T | 44.5/165.9 |
| C812 | 4030011600 | S.CER C1608 JB 1E 104K-T | T | 79.6/177.6 |
| C813 | 4030017800 | S.CER C1608 CH 1H 561J-T | B | 78.9/175.6 |
| C831 | 4030009910 | S.CER C1608 CH 1H 040B-T | T | 91.6/167.3 |
| C832 | 4030009510 | S.CER C1608 CH 1H 010B-T | T | 91.6/157.0 |
| C834 | 4030007030 | S.CER C1608 CH 1H 150J-T | T | 91.6/154.4 |
| C835 | 4030006900 | S.CER C1608 JB 1H 103K-T | T | 94.4/154.4 |
| C836 | 4510008540 | S.ELE EEE1CA100SR | T | 77.2/169.6 |
| C837 | 4030006880 | S.CER C1608 JB 1H 472K-T | T | 74.5/165.8 |
| C838 | 4030007020 | S.CER C1608 CH 1H 120J-T | T | 95.0/160.0 |
| C1000 | 4030007050 | S.CER C1608 CH 1H 220J-T | B | 177.2/13.9 |
| C1001 | 4030007170 | S.CER C1608 CH 1H 221J-T | T | 177.8/69.5 |
| C1002 | 4030006880 | S.CER C1608 JB 1H 472K-T | B | 153.1/16.2 |
| C1003 | 4030012600 | S.CER C2012 JB 1A 105M-T | T | 157.5/8.3 |
| C1004 | 4030011600 | S.CER C1608 JB 1E 104K-T | B | 169.6/8.7 |
| C1005 | 4030011600 | S.CER C1608 JB 1E 104K-T | T | 162.9/17.3 |
| C1006 | 4030010210 | S.CER C3216 JB 1C 105M-T | T | 173.8/18.6 |
| C1007 | 4030006880 | S.CER C1608 JB 1H 472K-T | T | 172.4/23.9 |
| C1008 | 4030006880 | S.CER C1608 JB 1H 472K-T | T | 160.0/24.0 |
| C1009 | 4030006880 | S.CER C1608 JB 1H 472K-T | T | 147.6/23.8 |
| C1010 | 4030012600 | S.CER C2012 JB 1A 105M-T | T | 154.5/28.9 |
| C1011 | 4030012600 | S.CER C2012 JB 1A 105M-T | T | 144.2/29.3 |
| C1012 | 4030010210 | S.CER C3216 JB 1C 105M-T | T | 144.9/40.2 |
| C1013 | 4030012600 | S.CER C2012 JB 1A 105M-T | T | 144.2/33.2 |
| C1014 | 4030018810 | S.CER C3216 CH 1H 333J-T | B | 151.6/48.3 |
| C1015 | 4030012600 | S.CER C2012 JB 1A 105M-T | T | 163.6/13.8 |
| C1016 | 4030012600 | S.CER C2012 JB 1A 105M-T | T | 173.6/33.2 |
| C1017 | 4030012600 | S.CER C2012 JB 1A 105M-T | T | 163.3/33.2 |
| C1020 | 4030012600 | S.CER C2012 JB 1A 105M-T | B | 170.0/38.6 |
| C1021 | 4030012600 | S.CER C2012 JB 1A 105M-T | B | 154.0/38.6 |
| C1024 | 4030010210 | S.CER C3216 JB 1C 105M-T | B | 170.5/45.5 |
| C1025 | 4030010210 | S.CER C3216 JB 1C 105M-T | B | 154.7/45.5 |
| C1026 | 4030010210 | S.CER C3216 JB 1C 105M-T | T | 171.4/52.7 |
| C1027 | 4030010210 | S.CER C3216 JB 1C 105M-T | T | 165.6/52.7 |
| C1028 | 4030006880 | S.CER C1608 JB 1H 472K-T | B | 156.4/65.4 |
| C1029 | 4030006880 | S.CER C1608 JB 1H 472K-T | T | 168.5/65.4 |
| C1030 | 4030010210 | S.CER C3216 JB 1C 105M-T | T | 164.6/18.0 |
| C1031 | 4030012600 | S.CER C2012 JB 1A 105M-T | B | 169.2/10.8 |
| C1032 | 4030011600 | S.CER C1608 JB 1E 104K-T | B | 183.5/65.0 |
| C1033 | 4550007500 | S.TAN F931D106MBABMA | B | 146.5/47.7 |
| Eqv. | 4550006470 | S.TAN TEESVB2 1D 106M8R | | |
| C1034 | 4550007500 | S.TAN F931D106MBABMA | B | 174.0/52.1 |
| Eqv. | 4550006470 | S.TAN TEESVB2 1D 106M8R | | |
| C1035 | 4550007500 | S.TAN F931D106MBABMA | B | 164.6/15.8 |
| Eqv. | 4550006470 | S.TAN TEESVB2 1D 106M8R | | |
| C1036 | 4030007120 | S.CER C1608 CH 1H 820J-T | T | 160.2/12.8 |
| C1037 | 4030007090 | S.CER C1608 CH 1H 470J-T | B | 149.4/49.3 |
| C1038 | 4030017810 | S.CER C1608 CH 1H 102J-T | T | 146.6/26.3 |
| C1039 | 4030017810 | S.CER C1608 CH 1H 102J-T | T | 146.6/41.0 |
| C1040 | 4030017810 | S.CER C1608 CH 1H 102J-T | T | 145.3/36.4 |
| C1041 | 4030006990 | S.CER C1608 CH 1H 080D-T | B | 153.5/31.0 |
| C1046 | 4030007010 | S.CER C1608 CH 1H 100D-T | B | 168.5/53.8 |
| C1048 | 4030006880 | S.CER C1608 JB 1H 472K-T | B | 170.7/41.7 |
| C1049 | 4030006880 | S.CER C1608 JB 1H 472K-T | B | 154.7/41.7 |
| C1050 | 4030017810 | S.CER C1608 CH 1H 102J-T | B | 170.5/49.5 |
| C1051 | 4030017810 | S.CER C1608 CH 1H 102J-T | B | 154.7/49.4 |
| C1052 | 4030007060 | S.CER C1608 CH 1H 270J-T | B | 164.1/29.6 |
| C1053 | 4030007110 | S.CER C1608 CH 1H 680J-T | T | 175.3/77.3 |
| C1054 | 4030007010 | S.CER C1608 CH 1H 100D-T | B | 175.8/72.4 |
| C1055 | 4030007140 | S.CER C1608 CH 1H 121J-T | B | 175.8/74.2 |
| C1056 | 4030007050 | S.CER C1608 CH 1H 220J-T | T | 175.3/76.0 |
| C1057 | 4030007130 | S.CER C1608 CH 1H 101J-T | T | 172.1/77.2 |
| C1058 | 4030009920 | S.CER C1608 CH 1H 050B-T | B | 173.3/12.7 |
| C1060 | 4030017810 | S.CER C1608 CH 1H 102J-T | T | 178.6/94.4 |
| C1061 | 4030007090 | S.CER C1608 CH 1H 470J-T | B | 147.7/91.9 |
| C1062 | 4030007170 | S.CER C1608 CH 1H 221J-T | B | 149.5/91.9 |
| C1064 | 4030007090 | S.CER C1608 CH 1H 470J-T | T | 148.8/80.2 |
| C1066 | 4030007010 | S.CER C1608 CH 1H 100D-T | T | 138.7/82.0 |
| C1067 | 4030007010 | S.CER C1608 CH 1H 100D-T | T | 173.4/77.2 |
| C1070 | 4030006980 | S.CER C1608 CH 1H 070D-T | T | 137.2/82.0 |
| C1071 | 4030007100 | S.CER C1608 CH 1H 560J-T | B | 162.2/75.4 |
| C1072 | 4030007170 | S.CER C1608 CH 1H 221J-T | B | 162.0/78.7 |
| C1073 | 4030007080 | S.CER C1608 CH 1H 390J-T | B | 164.1/76.5 |
| C1074 | 4030007060 | S.CER C1608 CH 1H 270J-T | T | 148.8/78.7 |
| C1081 | 4030006900 | S.CER C1608 JB 1H 103K-T | B | 156.1/86.0 |
| C1082 | 4030006900 | S.CER C1608 JB 1H 103K-T | B | 151.3/91.9 |
| C1083 | 4030006900 | S.CER C1608 JB 1H 103K-T | B | 151.2/81.7 |
| C1084 | 4030006880 | S.CER C1608 JB 1H 472K-T | B | 149.4/81.7 |
| C1085 | 4030006880 | S.CER C1608 JB 1H 472K-T | B | 153.0/81.7 |
| C1091 | 4030006880 | S.CER C1608 JB 1H 472K-T | T | 149.4/149.4 |
| C1092 | 4030006880 | S.CER C1608 JB 1H 472K-T | T | 147.0/138.5 |
| C1093 | 4030006880 | S.CER C1608 JB 1H 472K-T | T | 161.3/135.9 |
| C1101 | 4030006900 | S.CER C1608 JB 1H 103K-T | T | 177.0/91.0 |
| C1102 | 4030006900 | S.CER C1608 JB 1H 103K-T | T | 175.4/115.5 |
| C1103 | 4030011600 | S.CER C1608 JB 1E 104K-T | T | 179.6/116.4 |
| C1104 | 4030011600 | S.CER C1608 JB 1E 104K-T | T | 175.4/87.7 |
| C1106 | 4030011600 | S.CER C1608 JB 1E 104K-T | T | 179.3/128.8 |
| C1107 | 4030011600 | S.CER C1608 JB 1E 104K-T | B | 172.3/124.3 |
| C1109 | 4030007090 | S.CER C1608 CH 1H 470J-T | T | 175.7/137.9 |
| C1110 | 4030006900 | S.CER C1608 JB 1H 103K-T | T | 175.7/136.6 |
| C1111 | 4030011600 | S.CER C1608 JB 1E 104K-T | T | 176.7/132.0 |
| C1112 | 4030006900 | S.CER C1608 JB 1H 103K-T | T | 179.3/132.0 |
| C1113 | 4030007090 | S.CER C1608 CH 1H 470J-T | T | 178.6/140.9 |
| C1114 | 4030006900 | S.CER C1608 JB 1H 103K-T | B | 178.5/138.0 |
| C1115 | 4030011600 | S.CER C1608 JB 1E 104K-T | T | 175.7/140.1 |

Eqv.= This component is equivalent to the REF No. component listed above, and may be substituted on parts orders and repairs.

M.=Mounted side (T: Mounted on the Top side, B: Mounted on the Bottom side)
S.=Surface mount

## [RXPLL-A UNIT]

| REF NO. | PARTS NO. | DESCRIPTION | M. | H/V LOCATION |
|---|---|---|---|---|
| C1116 | 4030006900 | S.CER C1608 JB 1H 103K-T | T | 165.7/138.7 |
| C1117 | 4030007010 | S.CER C1608 CH 1H 100D-T | T | 169.7/142.2 |
| C1118 | 4030011600 | S.CER C1608 JB 1E 104K-T | T | 171.0/142.2 |
| C1119 | 4030006880 | S.CER C1608 JB 1H 472K-T | T | 172.0/146.6 |
| C1120 | 4030006880 | S.CER C1608 JB 1H 472K-T | T | 172.0/148.4 |
| C1121 | 4030011600 | S.CER C1608 JB 1E 104K-T | T | 180.6/147.7 |
| C1122 | 4030009530 | S.CER C1608 CH 1H 030B-T | T | 178.2/120.3 |
| C1123 | 4030006900 | S.CER C1608 JB 1H 103K-T | T | 182.1/100.9 |
| C1124 | 4030006900 | S.CER C1608 JB 1H 103K-T | T | 175.4/105.9 |
| C1125 | 4030006900 | S.CER C1608 JB 1H 103K-T | T | 175.5/85.1 |
| C1126 | 4030011600 | S.CER C1608 JB 1E 104K-T | T | 173.5/131.1 |
| C1151 | 4030007110 | S.CER C1608 CH 1H 680J-T | B | 123.2/64.1 |
| C1152 | 4030007110 | S.CER C1608 CH 1H 680J-T | B | 123.2/57.1 |
| C1153 | 4030017810 | S.CER C1608 CH 1H 102J-T | T | 131.5/64.0 |
| C1201 | 4030007110 | S.CER C1608 CH 1H 680J-T | B | 120.3/21.8 |
| C1202 | 4030007110 | S.CER C1608 CH 1H 680J-T | B | 118.5/21.8 |
| C1207 | 4030006880 | S.CER C1608 JB 1H 472K-T | B | 123.1/11.9 |
| C1214 | 4030007170 | S.CER C1608 CH 1H 221J-T | T | 137.4/55.4 |
| C1215 | 4030011600 | S.CER C1608 JB 1E 104K-T | T | 137.7/51.9 |
| C1226 | 4030009500 | S.CER C1608 CH 1H 0R5B-T | B | 125.0/35.7 |
| C1227 | 4030009500 | S.CER C1608 CH 1H 0R5B-T | B | 115.5/35.7 |
| C1228 | 4030009920 | S.CER C1608 CH 1H 050B-T | B | 114.0/41.9 |
| C1231 | 4030006900 | S.CER C1608 JB 1H 103K-T | T | 118.9/21.5 |
| C1232 | 4030006900 | S.CER C1608 JB 1H 103K-T | T | 109.0/21.5 |
| C1234 | 4030006900 | S.CER C1608 JB 1H 103K-T | B | 123.6/38.3 |
| C1235 | 4030006880 | S.CER C1608 JB 1H 472K-T | B | 116.6/32.2 |
| C1236 | 4030006900 | S.CER C1608 JB 1H 103K-T | T | 119.8/40.1 |
| C1238 | 4030006900 | S.CER C1608 JB 1H 103K-T | B | 114.1/38.3 |
| C1239 | 4030006880 | S.CER C1608 JB 1H 472K-T | B | 106.8/32.3 |
| C1240 | 4030006900 | S.CER C1608 JB 1H 103K-T | T | 111.7/40.5 |
| C1241 | 4030006900 | S.CER C1608 JB 1H 103K-T | T | 113.6/38.6 |
| C1243 | 4030006880 | S.CER C1608 JB 1H 472K-T | B | 129.6/46.7 |
| C1244 | 4030007080 | S.CER C1608 CH 1H 390J-T | T | 149.7/67.0 |
| C1245 | 4030007130 | S.CER C1608 CH 1H 101J-T | T | 151.0/64.4 |
| C1246 | 4030007120 | S.CER C1608 CH 1H 820J-T | T | 151.0/67.1 |
| C1247 | 4030007090 | S.CER C1608 CH 1H 470J-T | T | 153.5/63.5 |
| C1248 | 4030007130 | S.CER C1608 CH 1H 101J-T | T | 153.5/66.8 |
| C1249 | 4030007020 | S.CER C1608 CH 1H 120J-T | T | 153.2/70.3 |
| C1250 | 4030007100 | S.CER C1608 CH 1H 560J-T | B | 152.5/74.3 |
| C1251 | 4030006900 | S.CER C1608 JB 1H 103K-T | T | 160.2/92.9 |
| C1252 | 4030006900 | S.CER C1608 JB 1H 103K-T | T | 152.7/92.9 |
| C1253 | 4030006900 | S.CER C1608 JB 1H 103K-T | B | 152.5/111.3 |
| C1255 | 4030017810 | S.CER C1608 CH 1H 102J-T | B | 155.8/99.3 |
| C1256 | 4030007010 | S.CER C1608 CH 1H 100D-T | T | 156.3/98.8 |
| C1257 | 4030011600 | S.CER C1608 JB 1E 104K-T | B | 155.8/103.0 |
| C1258 | 4030007080 | S.CER C1608 CH 1H 390J-T | B | 152.1/97.5 |
| C1264 | 4030007110 | S.CER C1608 CH 1H 680J-T | T | 122.0/51.1 |
| C1265 | 4610001830 | S.TRI TZB4S100AB10R00 (TZBX4N100BA110) | T | 163.8/70.8 |
| C1266 | 4030007020 | S.CER C1608 CH 1H 120J-T | T | 160.2/74.6 |
| C1267 | 4030006880 | S.CER C1608 JB 1H 472K-T | B | 157.0/126.5 |
| C1268 | 4030006980 | S.CER C1608 CH 1H 070D-T | T | 149.7/64.4 |
| C1302 | 4030007060 | S.CER C1608 CH 1H 270J-T | T | 159.3/111.0 |
| C1303 | 4030006980 | S.CER C1608 CH 1H 070D-T | T | 159.3/112.9 |
| C1304 | 4030007070 | S.CER C1608 CH 1H 330J-T | T | 159.3/114.2 |
| C1305 | 4030007010 | S.CER C1608 CH 1H 100D-T | T | 153.5/114.6 |
| C1306 | 4030009650 | S.CER C1608 CH 1H 240J-T | T | 159.3/115.5 |
| C1307 | 4030007030 | S.CER C1608 CH 1H 150J-T | T | 153.5/120.2 |
| C1308 | 4030006900 | S.CER C1608 JB 1H 103K-T | T | 155.1/127.1 |
| C1309 | 4030007080 | S.CER C1608 CH 1H 390J-T | T | 156.5/125.8 |
| C1310 | 4030007080 | S.CER C1608 CH 1H 390J-T | T | 159.1/128.4 |
| C1311 | 4030006900 | S.CER C1608 JB 1H 103K-T | B | 149.0/118.9 |
| C1312 | 4030007060 | S.CER C1608 CH 1H 270J-T | T | 155.5/111.7 |
| C1313 | 4030007060 | S.CER C1608 CH 1H 270J-T | T | 159.1/127.1 |
| C1355 | 4030006880 | S.CER C1608 JB 1H 472K-T | T | 144.7/70.0 |
| C1357 | 4030007000 | S.CER C1608 CH 1H 090D-T | B | 144.6/67.2 |
| C1358 | 4030011600 | S.CER C1608 JB 1E 104K-T | B | 139.2/70.5 |
| C1360 | 4030011600 | S.CER C1608 JB 1E 104K-T | B | 146.4/70.5 |
| C1361 | 4030007020 | S.CER C1608 CH 1H 120J-T | B | 137.8/69.5 |
| C1362 | 4030011600 | S.CER C1608 JB 1E 104K-T | T | 137.5/65.6 |
| C1403 | 4030017810 | S.CER C1608 CH 1H 102J-T | T | 114.8/70.4 |
| C1404 | 4030017810 | S.CER C1608 CH 1H 102J-T | T | 116.3/104.8 |
| C1405 | 4030006900 | S.CER C1608 JB 1H 103K-T | B | 115.9/63.9 |
| C1406 | 4030017810 | S.CER C1608 CH 1H 102J-T | T | 114.3/66.3 |
| C1407 | 4030017810 | S.CER C1608 CH 1H 102J-T | T | 120.0/70.3 |
| C1408 | 4030006900 | S.CER C1608 JB 1H 103K-T | T | 116.4/73.0 |
| C1409 | 4030006900 | S.CER C1608 JB 1H 103K-T | T | 114.4/68.2 |
| C1410 | 4030007030 | S.CER C1608 CH 1H 150J-T | T | 116.3/83.4 |
| C1411 | 4030006990 | S.CER C1608 CH 1H 080D-T | T | 112.2/87.9 |
| C1412 | 4030007030 | S.CER C1608 CH 1H 150J-T | T | 116.3/93.8 |
| C1413 | 4030007020 | S.CER C1608 CH 1H 120J-T | T | 107.0/83.4 |
| C1414 | 4030006990 | S.CER C1608 CH 1H 080D-T | T | 103.6/86.7 |
| C1415 | 4030007020 | S.CER C1608 CH 1H 120J-T | T | 107.0/93.8 |
| C1416 | 4030006900 | S.CER C1608 JB 1H 103K-T | T | 113.2/103.5 |
| C1417 | 4030006900 | S.CER C1608 JB 1H 103K-T | T | 110.6/107.7 |
| C1418 | 4030017810 | S.CER C1608 CH 1H 102J-T | T | 110.4/105.8 |
| C1419 | 4030017810 | S.CER C1608 CH 1H 102J-T | T | 111.0/109.0 |
| C1420 | 4030007120 | S.CER C1608 CH 1H 820J-T | B | 113.2/114.3 |
| C1421 | 4030007150 | S.CER C1608 CH 1H 151J-T | B | 115.0/114.3 |
| C1423 | 4030010750 | S.CER C1608 CH 1H 201J-T | B | 120.3/111.1 |
| C1424 | 4030007010 | S.CER C1608 CH 1H 100D-T | T | 132.8/103.4 |
| C1425 | 4030011600 | S.CER C1608 JB 1E 104K-T | T | 136.5/106.3 |
| C1426 | 4030011600 | S.CER C1608 JB 1E 104K-T | T | 137.8/106.3 |
| C1427 | 4030006900 | S.CER C1608 JB 1H 103K-T | T | 133.9/106.3 |
| C1428 | 4030006980 | S.CER C1608 CH 1H 070D-T | T | 119.6/109.0 |
| C1429 | 4030006900 | S.CER C1608 JB 1H 103K-T | T | 120.6/113.6 |
| C1430 | 4030007040 | S.CER C1608 CH 1H 180J-T | B | 131.9/115.4 |
| C1431 | 4030017810 | S.CER C1608 CH 1H 102J-T | T | 127.1/116.2 |
| C1432 | 4030009980 | S.CER C1608 JB 1H 152K-T | T | 129.1/114.2 |
| C1433 | 4030011600 | S.CER C1608 JB 1E 104K-T | T | 130.4/114.2 |
| C1434 | 4030009920 | S.CER C1608 CH 1H 050B-T | B | 124.7/134.4 |
| C1435 | 4030009920 | S.CER C1608 CH 1H 050B-T | B | 124.7/131.6 |
| C1436 | 4030011600 | S.CER C1608 JB 1E 104K-T | B | 137.3/122.2 |
| C1437 | 4030009920 | S.CER C1608 CH 1H 050B-T | T | 104.0/83.4 |
| C1438 | 4030009920 | S.CER C1608 CH 1H 050B-T | T | 102.3/86.7 |

## [RXPLL-A UNIT]

| REF NO. | PARTS NO. | DESCRIPTION | M. | H/V LOCATION |
|---|---|---|---|---|
| C1439 | 4030009920 | S.CER C1608 CH 1H 050B-T | T | 110.0/93.8 |
| C1441 | 4030006880 | S.CER C1608 JB 1H 472K-T | T | 120.6/116.2 |
| C1451 | 4030007020 | S.CER C1608 CH 1H 120J-T | T | 125.5/80.2 |
| C1453 | 4030007030 | S.CER C1608 CH 1H 150J-T | T | 122.1/85.1 |
| C1454 | 4030007030 | S.CER C1608 CH 1H 150J-T | T | 120.8/85.1 |
| C1456 | 4030007020 | S.CER C1608 CH 1H 120J-T | T | 125.6/90.9 |
| C1457 | 4030006900 | S.CER C1608 JB 1H 103K-T | T | 118.4/72.9 |
| C1458 | 4030006900 | S.CER C1608 JB 1H 103K-T | T | 116.6/103.5 |
| C1501 | 4030018530 | S.CER C3216 CH 1H 103J-T | T | 131.3/124.6 |
| C1502 | 4550007660 | S.TAN F931E105MAABMA | T | 132.1/139.3 |
| Eqv. | 4550003220 | S.TAN TEESVA 1E 105M8R | | |
| C1503 | 4030006900 | S.CER C1608 JB 1H 103K-T | T | 137.0/142.1 |
| C1504 | 4030012610 | S.CER C2012 JB 1C 474K-T | T | 136.7/140.5 |
| C1505 | 4030007010 | S.CER C1608 CH 1H 100D-T | T | 130.0/143.5 |
| C1506 | 4030010760 | S.CER C1608 CH 1H 331J-T | T | 131.3/146.3 |
| C1507 | 4510008540 | S.ELE EEE1CA100SR | T | 142.6/140.8 |
| C1508 | 4030011600 | S.CER C1608 JB 1E 104K-T | B | 128.8/148.8 |
| C1509 | 4030018800 | S.CER C3216 CH 1H 223J-T | T | 135.8/145.1 |
| C1510 | 4030007110 | S.CER C1608 CH 1H 680J-T | T | 136.5/158.9 |
| C1511 | 4510008540 | S.ELE EEE1CA100SR | T | 132.7/150.6 |
| C1512 | 4030011600 | S.CER C1608 JB 1E 104K-T | T | 129.6/149.0 |
| C1513 | 4030011600 | S.CER C1608 JB 1E 104K-T | T | 129.6/158.1 |
| C1514 | 4510008540 | S.ELE EEE1CA100SR | T | 132.7/156.5 |
| C1515 | 4030007160 | S.CER C1608 CH 1H 181J-T | T | 132.2/160.8 |
| C1516 | 4030009350 | S.CER C1608 CH 1H 3R5B-T | T | 130.9/160.8 |
| C1517 | 4030007110 | S.CER C1608 CH 1H 680J-T | T | 115.3/155.0 |
| C1518 | 4030018530 | S.CER C3216 CH 1H 103J-T | T | 131.3/132.8 |
| C1519 | 4550007660 | S.TAN F931E105MAABMA | T | 122.9/140.9 |
| Eqv. | 4550003220 | S.TAN TEESVA 1E 105M8R | | |
| C1520 | 4030006900 | S.CER C1608 JB 1H 103K-T | T | 119.8/140.8 |
| C1521 | 4030012610 | S.CER C2012 JB 1C 474K-T | T | 116.2/142.1 |
| C1522 | 4030007010 | S.CER C1608 CH 1H 100D-T | T | 123.7/143.5 |
| C1523 | 4030010760 | S.CER C1608 CH 1H 331J-T | T | 122.4/146.3 |
| C1524 | 4030018800 | S.CER C3216 CH 1H 223J-T | T | 117.9/145.2 |
| C1525 | 4510008540 | S.ELE EEE1CA100SR | T | 124.9/150.6 |
| C1526 | 4030011600 | S.CER C1608 JB 1E 104K-T | T | 128.0/149.0 |
| C1527 | 4030011600 | S.CER C1608 JB 1E 104K-T | T | 128.0/158.1 |
| C1528 | 4510008540 | S.ELE EEE1CA100SR | T | 124.9/156.5 |
| C1529 | 4030017870 | S.CER C1608 CH 1H 681J-T | T | 125.4/160.8 |
| C1530 | 4030011330 | S.CER C1608 CH 1H 391J-T | T | 126.7/160.8 |
| C1531 | 4510008500 | S.ELE EEE1CA101WP | T | 111.3/167.3 |
| C1532 | 4030011600 | S.CER C1608 JB 1E 104K-T | T | 107.1/167.3 |
| C1533 | 4030011600 | S.CER C1608 JB 1E 104K-T | T | 115.5/167.3 |
| C1534 | 4510008500 | S.ELE EEE1CA101WP | T | 119.7/167.3 |
| C1535 | 4030011600 | S.CER C1608 JB 1E 104K-T | T | 133.7/172.6 |
| C1536 | 4030017870 | S.CER C1608 CH 1H 681J-T | T | 126.2/179.5 |
| C1537 | 4510008500 | S.ELE EEE1CA101WP | T | 111.3/176.0 |
| C1538 | 4030011600 | S.CER C1608 JB 1E 104K-T | T | 107.1/176.0 |
| C1539 | 4030011600 | S.CER C1608 JB 1E 104K-T | T | 115.5/176.0 |
| C1540 | 4510008500 | S.ELE EEE1CA101WP | T | 119.7/176.0 |
| C1541 | 4030007050 | S.CER C1608 CH 1H 220J-T | T | 124.0/175.0 |
| C1651 | 4030006880 | S.CER C1608 JB 1H 472K-T | B | 105.5/144.1 |
| C1653 | 4030006880 | S.CER C1608 JB 1H 472K-T | B | 109.0/137.2 |
| C1654 | 4030017810 | S.CER C1608 CH 1H 102J-T | B | 106.9/137.2 |
| C1655 | 4030009530 | S.CER C1608 CH 1H 030B-T | T | 107.6/136.8 |
| C1656 | 4610001970 | S.TRI TZC3P200A110R00 (TZC03P200A1102) | T | 110.9/136.2 |
| C1657 | 4030010220 | S.CER C2012 CH 1H 102J-T | T | 116.4/122.8 |
| C1658 | 4030010220 | S.CER C2012 CH 1H 102J-T | T | 116.4/131.0 |
| C1659 | 4030011600 | S.CER C1608 JB 1E 104K-T | T | 107.8/120.1 |
| C1660 | 4030011600 | S.CER C1608 JB 1E 104K-T | B | 134.0/174.0 |
| C1661 | 4030011600 | S.CER C1608 JB 1E 104K-T | B | 145.2/171.4 |
| C1662 | 4030011600 | S.CER C1608 JB 1E 104K-T | T | 144.3/178.0 |
| C1663 | 4030011600 | S.CER C1608 JB 1E 104K-T | T | 135.1/170.2 |
| C1665 | 4030006900 | S.CER C1608 JB 1H 103K-T | T | 138.9/164.1 |
| C1666 | 4030006880 | S.CER C1608 JB 1H 472K-T | B | 113.3/144.1 |
| C1701 | 4030011600 | S.CER C1608 JB 1E 104K-T | T | 153.4/163.0 |
| C1702 | 4030011600 | S.CER C1608 JB 1E 104K-T | T | 144.4/163.0 |
| C1703 | 4510004601 | ELE 16 ME 1000 HC | | |
| C1704 | 4030011600 | S.CER C1608 JB 1E 104K-T | B | 180.1/160.2 |
| C1705 | 4030011600 | S.CER C1608 JB 1E 104K-T | B | 186.4/160.2 |
| C1706 | 4510008520 | S.ELE EEE1CA470SP | T | 172.7/154.8 |
| C1707 | 4030011600 | S.CER C1608 JB 1E 104K-T | T | 149.7/154.8 |
| C1708 | 4030006880 | S.CER C1608 JB 1H 472K-T | T | 175.7/166.8 |
| C1709 | 4030006880 | S.CER C1608 JB 1H 472K-T | T | 172.6/166.8 |
| C1710 | 4030006880 | S.CER C1608 JB 1H 472K-T | T | 169.6/166.8 |
| C1711 | 4030011340 | S.CER C1608 CH 1H 471J-T | T | 171.4/163.5 |
| C1712 | 4030011340 | S.CER C1608 CH 1H 471J-T | T | 167.5/163.5 |
| C1713 | 4030006880 | S.CER C1608 JB 1H 472K-T | B | 165.5/168.8 |
| C1714 | 4030006880 | S.CER C1608 JB 1H 472K-T | B | 153.8/141.9 |
| C1716 | 4030006880 | S.CER C1608 JB 1H 472K-T | B | 154.7/145.2 |
| C1717 | 4030006880 | S.CER C1608 JB 1H 472K-T | B | 152.9/145.2 |
| C1719 | 4030006880 | S.CER C1608 JB 1H 472K-T | B | 151.1/145.2 |
| C1720 | 4030006880 | S.CER C1608 JB 1H 472K-T | B | 155.6/141.9 |
| C1721 | 4030006880 | S.CER C1608 JB 1H 472K-T | B | 157.4/141.9 |
| RL1001 | 6330001750 | REL FTR-B4CA012Z | | |
| RL1002 | 6330001750 | REL FTR-B4CA012Z | | |
| RL1003 | 6330001750 | REL FTR-B4CA012Z | | |
| RL1004 | 6330001750 | REL FTR-B4CA012Z | | |
| RL1005 | 6330001750 | REL FTR-B4CA012Z | | |
| RL1006 | 6330001750 | REL FTR-B4CA012Z | | |
| RL1203 | 6330001750 | REL FTR-B4CA012Z | | |
| RL1206 | 6330001750 | REL FTR-B4CA012Z | | |
| J2 | 6510019991 | S.CON 52808-2271(2291) | T | 25.0/9.0 |
| J10 | 6510028210 | CON SJ050010 (TMP-J01X-V6) | | |
| J351 | 6510028210 | CON SJ050010 (TMP-J01X-V6) | | |
| J421 | 6510028210 | CON SJ050010 (TMP-J01X-V6) | | |
| J561 | 6510028210 | CON SJ050010 (TMP-J01X-V6) | | |
| J601 | 6510028210 | CON SJ050010 (TMP-J01X-V6) | | |
| J681 | 6510028210 | CON SJ050010 (TMP-J01X-V6) | | |
| J831 | 6510028210 | CON SJ050010 (TMP-J01X-V6) | | |

Eqv.= This component is equivalent to the REF No. component listed above, and may be substituted on parts orders and repairs.

M.=Mounted side (T: Mounted on the Top side, B: Mounted on the Bottom side)
S.=Surface mount

## [RXPLL-A UNIT]

| REF NO. | PARTS NO. | DESCRIPTION | | M. | H/V LOCATION |
|---|---|---|---|---|---|
| J1001 | 6510028210 | CON | SJ050010 (TMP-J01X-V6) | | |
| J1002 | 6510028210 | CON | SJ050010 (TMP-J01X-V6) | | |
| J1101 | 6510028210 | CON | SJ050010 (TMP-J01X-V6) | | |
| J1201 | 6510028210 | CON | SJ050010 (TMP-J01X-V6) | | |
| J1301 | 6510028210 | CON | SJ050010 (TMP-J01X-V6) | | |
| J1501 | 6510018961 | S.CON | B2B-PH-SM4-TB(LF)(SN) | T | 149.6/177.5 |
| J1701 | 6510019981 | S.CON | 52808-1671(1690) | T | 168.0/177.2 |
| W1052 | 9016201006 | WIR | 73/98/025/X98/X98 | | |
| W1401 | 9029495075 | JUM | 73/98/020/X98/X98 | | |
| W1411 | 7120000480 | S.JUM | MJP-0.4-T | T | 125.1/111.6 |
| EP20 | 6910012350 | S.BEA | MMZ1608Y 102BT | T | 85.4/126.0 |
| EP21 | 6910012350 | S.BEA | MMZ1608Y 102BT | T | 88.7/124.0 |
| EP22 | 6910012350 | S.BEA | MMZ1608Y 102BT | T | 90.0/124.0 |
| EP101 | 6910012350 | S.BEA | MMZ1608Y 102BT | B | 47.7/98.6 |
| EP102 | 6910012350 | S.BEA | MMZ1608Y 102BT | B | 47.7/96.8 |
| EP103 | 6910012350 | S.BEA | MMZ1608Y 102BT | T | 46.1/96.8 |
| EP104 | 6910012350 | S.BEA | MMZ1608Y 102BT | T | 46.1/92.9 |
| EP105 | 6910012350 | S.BEA | MMZ1608Y 102BT | T | 46.1/91.6 |
| EP106 | 6910012350 | S.BEA | MMZ1608Y 102BT | T | 46.1/89.0 |
| EP107 | 6910012350 | S.BEA | MMZ1608Y 102BT | B | 47.7/100.4 |
| EP108 | 6910012350 | S.BEA | MMZ1608Y 102BT | B | 47.7/102.2 |
| EP1701 | 6910012350 | S.BEA | MMZ1608Y 102BT | T | 170.1/163.5 |
| EP1702 | 6910012350 | S.BEA | MMZ1608Y 102BT | T | 168.8/163.5 |
| EP1801 | 6910012350 | S.BEA | MMZ1608Y 102BT | B | 153.1/132.7 |
| EP1802 | 6910012350 | S.BEA | MMZ1608Y 102BT | B | 142.5/18.8 |
| EP1804 | 6910012350 | S.BEA | MMZ1608Y 102BT | B | 112.5/138.7 |
| EP1805 | 6910012350 | S.BEA | MMZ1608Y 102BT | B | 150.2/141.9 |
| EP1806 | 6910012350 | S.BEA | MMZ1608Y 102BT | B | 128.6/64.4 |
| EP1807 | 6910012350 | S.BEA | MMZ1608Y 102BT | B | 117.5/50.3 |
| EP1808 | 6910012350 | S.BEA | MMZ1608Y 102BT | B | 137.0/166.9 |
| EP1809 | 6910012350 | S.BEA | MMZ1608Y 102BT | B | 147.4/127.5 |
| EP1810 | 6910012350 | S.BEA | MMZ1608Y 102BT | B | 131.4/64.3 |
| EP1811 | 6910012350 | S.BEA | MMZ1608Y 102BT | T | 160.7/56.3 |
| EP1812 | 6910012350 | S.BEA | MMZ1608Y 102BT | B | 153.5/137.5 |
| EP1813 | 6910012350 | S.BEA | MMZ1608Y 102BT | B | 132.7/65.8 |
| EP1814 | 6910012350 | S.BEA | MMZ1608Y 102BT | B | 147.2/22.3 |
| EP1815 | 6910012350 | S.BEA | MMZ1608Y 102BT | B | 156.0/62.6 |
| EP1816 | 6910012350 | S.BEA | MMZ1608Y 102BT | B | 160.4/20.9 |
| EP1817 | 6910012350 | S.BEA | MMZ1608Y 102BT | B | 168.6/62.2 |
| EP1818 | 6910012350 | S.BEA | MMZ1608Y 102BT | B | 151.3/133.3 |
| EP1819 | 6910012350 | S.BEA | MMZ1608Y 102BT | B | 145.6/127.9 |
| EP1820 | 6910012350 | S.BEA | MMZ1608Y 102BT | B | 148.6/19.8 |
| EP1821 | 6910012350 | S.BEA | MMZ1608Y 102BT | B | 148.6/14.1 |
| EP1825 | 6910012350 | S.BEA | MMZ1608Y 102BT | B | 126.6/7.1 |
| EP1826 | 6910012350 | S.BEA | MMZ1608Y 102BT | B | 151.6/137.8 |
| EP1830 | 6910012350 | S.BEA | MMZ1608Y 102BT | B | 141.3/135.2 |
| EP1831 | 6910012350 | S.BEA | MMZ1608Y 102BT | B | 143.4/128.5 |
| EP1832 | 6910012350 | S.BEA | MMZ1608Y 102BT | B | 149.2/137.6 |
| EP1833 | 6910012350 | S.BEA | MMZ1608Y 102BT | B | 147.3/133.5 |
| EP1834 | 6910012350 | S.BEA | MMZ1608Y 102BT | T | 115.9/108.3 |
| EP1835 | 6910012350 | S.BEA | MMZ1608Y 102BT | B | 141.6/128.5 |
| EP1836 | 6910012350 | S.BEA | MMZ1608Y 102BT | T | 111.0/110.3 |
| EP1837 | 6910012350 | S.BEA | MMZ1608Y 102BT | B | 145.9/134.2 |
| EP1838 | 6910012350 | S.BEA | MMZ1608Y 102BT | T | 116.4/106.1 |

## [RXPLL-B UNIT]

| REF NO. | PARTS NO. | DESCRIPTION | | M. | H/V LOCATION |
|---|---|---|---|---|---|
| IC1 | 1130011530 | S.IC | CD74HC4094M96 | T | 11.9/24.1 |
| IC2 | 1130009691 | S.IC | TC74HCT7007AF(F) S | T | 22.8/23.3 |
| IC51 | 1180001252 | S.IC | TA7808F(TE16L1NQ) | T | 77.0/16.7 |
| IC61 | 1180000421 | S.IC | TA78L05F(TE12RF) | B | 56.5/16.0 |
| IC101 | 1140007881 | S.IC | TC190G08EFG0046JDZ/SC1246A | T | 31.3/89.7 |
| IC102 | 1130003831 | S.IC | TC7S04F(TE85RF) | T | 33.1/74.7 |
| IC104 | 1130003831 | S.IC | TC7S04F(TE85RF) | T | 31.8/101.1 |
| IC201 | 1130009230 | S.IC | LMX2306TMX/NOPB | T | 27.9/38.8 |
| IC501 | 1140007881 | S.IC | TC190G08EFG0046JDZ/SC1246A | T | 31.3/142.5 |
| IC502 | 1130003831 | S.IC | TC7S04F(TE85RF) | T | 24.8/127.4 |
| IC503 | 1130003831 | S.IC | TC7S04F(TE85RF) | T | 31.7/154.1 |
| IC651 | 1140014960 | S.IC | TC190G02EFG-0058/SC1287A | T | 22.6/169.2 |
| IC652 | 1130003831 | S.IC | TC7S04F(TE85RF) | T | 13.8/163.8 |
| IC1051 | 1190002010 | S.IC | SD5400CY <TOMO> | T | 176.9/99.9 |
| IC1081 | 1110006180 | S.IC | UPG2009TB-E3 | B | 151.7/85.1 |
| IC1402 | 1190002110 | S.IC | NJG1519KC1-TE3-#ZZZB | T | 117.4/69.6 |
| IC1403 | 1190002110 | S.IC | NJG1519KC1-TE3-#ZZZB | T | 113.5/106.3 |
| IC1501 | 1110006121 | S.IC | DBM9A41-G-TR | T | 121.2/124.5 |
| IC1502 | 1110006121 | S.IC | DBM9A41-G-TR | T | 121.2/133.0 |
| IC1503 | 1110006100 | S.IC | NJM5534MD-TE1-#ZZZB | T | 138.4/151.7 |
| IC1504 | 1110006100 | S.IC | NJM5534MD-TE1-#ZZZB | T | 119.2/151.7 |
| IC1505 | 1110006190 | S.IC | NJM074M-TE1-#ZZZB | T | 128.8/166.9 |
| IC1506 | 1110006100 | S.IC | NJM5534MD-TE1-#ZZZB | T | 128.8/175.6 |
| IC1651 | 1130011921 | S.IC | TC74LCX00F(ELF) | T | 110.0/126.2 |
| IC1652 | 1110005420 | S.IC | BA15532F-E2 | T | 139.8/175.6 |
| IC1653 | 1110005100 | S.IC | NJM072BM-TE1-#ZZZB | B | 140.0/172.0 |
| IC1701 | 1130011530 | S.IC | CD74HC4094M96 | T | 158.0/166.7 |
| IC1702 | 1130011530 | S.IC | CD74HC4094M96 | T | 148.9/166.7 |
| IC1703 | 1160000132 | S.IC | TD62783AFG(OSEL) | T | 157.3/154.8 |
| IC1704 | 1180000790 | S.IC | AN78L10M(E1) | B | 183.3/159.9 |
| Q1 | 1590001050 | S.TRA | DTC114TUA T106 | B | 30.3/22.6 |
| Q30 | 1530002060 | S.TRA | 2SC4081 T106 R | T | 22.3/110.9 |
| Q41 | 1590000680 | S.TRA | DTC114EUA T106 | T | 12.8/34.2 |
| Q150 | 1560000331 | S.FET | 2SK210-GR(TE85RF) | T | 26.9/53.0 |
| Q151 | 1530002280 | S.TRA | 2SC4081 T106 S | B | 33.6/57.2 |
| Q152 | 1530002280 | S.TRA | 2SC4081 T106 S | B | 30.8/78.2 |
| Q201 | 1590001330 | S.TRA | DTA114EUA T106 | T | 29.6/34.1 |
| Q220 | 1560000331 | S.FET | 2SK210-GR(TE85RF) | T | 72.5/33.9 |
| Q230 | 1560000331 | S.FET | 2SK210-GR(TE85RF) | T | 72.5/46.4 |
| Q240 | 1560000331 | S.FET | 2SK210-GR(TE85RF) | T | 72.5/58.9 |
| Q250 | 1560000331 | S.FET | 2SK210-GR(TE85RF) | T | 72.5/71.4 |
| Q260 | 1560000331 | S.FET | 2SK210-GR(TE85RF) | T | 72.5/83.9 |
| Q270 | 1560000331 | S.FET | 2SK210-GR(TE85RF) | T | 72.5/95.8 |
| Q280 | 1590000680 | S.TRA | DTC114EUA T106 | T | 82.3/34.4 |
| Q281 | 1590000680 | S.TRA | DTC114EUA T106 | T | 82.3/46.9 |
| Q282 | 1590000680 | S.TRA | DTC114EUA T106 | T | 82.3/59.4 |
| Q283 | 1590000680 | S.TRA | DTC114EUA T106 | T | 82.3/71.9 |
| Q284 | 1590000680 | S.TRA | DTC114EUA T106 | T | 82.3/84.4 |
| Q285 | 1590000680 | S.TRA | DTC114EUA T106 | T | 82.3/96.4 |
| Q301 | 1530003432 | S.TRA | 2SC5226A-4-TL-E | T | 92.1/30.1 |
| Q302 | 1530003432 | S.TRA | 2SC5226A-4-TL-E | B | 89.1/42.5 |
| Q303 | 1530003432 | S.TRA | 2SC5226A-4-TL-E | B | 91.4/25.2 |
| Q341 | 1590000680 | S.TRA | DTC114EUA T106 | T | 86.4/36.7 |
| Q351 | 1580000751 | S.FET | 3SK294(TE85LF) | T | 92.1/56.9 |
| Q352 | 1530003432 | S.TRA | 2SC5226A-4-TL-E | B | 89.2/64.5 |
| Q363 | 1590000680 | S.TRA | DTC114EUA T106 | T | 86.8/54.3 |
| Q364 | 1590001330 | S.TRA | DTA114EUA T106 | T | 86.8/57.4 |
| Q441 | 1590000680 | S.TRA | DTC114EUA T106 | T | 86.5/73.7 |
| Q502 | 1590000680 | S.TRA | DTC114EUA T106 | T | 41.9/128.8 |
| Q540 | 1530002060 | S.TRA | 2SC4081 T106 R | B | 58.7/141.2 |
| Q541 | 1560000331 | S.FET | 2SK210-GR(TE85RF) | T | 68.9/142.8 |
| Q561 | 1530003432 | S.TRA | 2SC5226A-4-TL-E | T | 70.6/153.8 |
| Q580 | 1530003432 | S.TRA | 2SC5226A-4-TL-E | T | 41.7/147.4 |
| Q591 | 1530003151 | S.TRA | 2SC4673D-TD-E | T | 61.7/166.5 |
| Q592 | 1520000561 | S.TRA | 2SB1123 T-TD-E | B | 52.0/165.3 |
| Q593 | 1590000680 | S.TRA | DTC114EUA T106 | B | 54.8/171.2 |
| Q601 | 1530002601 | S.TRA | 2SC4215-O(TE85RF) | T | 49.5/118.2 |
| Q680 | 1530002060 | S.TRA | 2SC4081 T106 R | T | 37.5/163.2 |
| Q702 | 1530002601 | S.TRA | 2SC4215-O(TE85RF) | T | 31.4/110.9 |
| Q1001 | 1530003852 | S.TRA | 2SC5551A-F-TD-E | B | 174.0/9.0 |
| Q1004 | 1590001960 | S.TRA | XP4311(TX) | T | 150.0/18.8 |
| Q1005 | 1590001960 | S.TRA | XP4311(TX) | T | 145.9/18.8 |
| Q1006 | 1530003852 | S.TRA | 2SC5551A-F-TD-E | B | 150.0/37.6 |
| Q1007 | 1530003852 | S.TRA | 2SC5551A-F-TD-E | B | 176.5/42.6 |
| Q1008 | 1530003852 | S.TRA | 2SC5551A-F-TD-E | B | 160.5/42.5 |
| Q1101 | 1530003860 | TRA | 2SC3950D | | |
| Q1102 | 1590000680 | S.TRA | DTC114EUA T106 | T | 165.5/133.8 |
| Q1103 | 1520000561 | S.TRA | 2SB1123 T-TD-E | B | 168.6/127.8 |
| Q1104 | 1530003860 | TRA | 2SC3950D | | |
| Q1105 | 1530003842 | S.TRA | 2SC5501A-4-TR-E | T | 166.5/142.1 |
| Q1205 | 1590001960 | S.TRA | XP4311(TX) | T | 158.8/55.6 |
| Q1209 | 1530003852 | S.TRA | 2SC5551A-F-TD-E | B | 121.1/34.9 |
| Q1210 | 1530003852 | S.TRA | 2SC5551A-F-TD-E | B | 111.6/34.9 |
| Q1211 | 1560001311 | S.FET | MMBFU310LT1G | T | 159.5/96.4 |
| Q1212 | 1560001311 | S.FET | MMBFU310LT1G | T | 153.5/96.4 |
| Q1213 | 1590000680 | S.TRA | DTC114EUA T106 | B | 156.9/123.8 |
| Q1214 | 1520000561 | S.TRA | 2SB1123 T-TD-E | B | 155.4/113.6 |
| Q1301 | 1530003151 | S.TRA | 2SC4673D-TD-E | T | 157.8/120.0 |
| Q1352 | 1530003852 | S.TRA | 2SC5551A-F-TD-E | B | 140.1/66.8 |
| Q1401 | 1530003842 | S.TRA | 2SC5501A-4-TR-E | T | 131.9/105.8 |
| Q1402 | 1530003021 | S.TRA | 2SC4402-3-TL-E | T | 123.4/111.8 |
| Q1403 | 1530003021 | S.TRA | 2SC4402-3-TL-E | T | 123.4/114.3 |
| Q1501 | 1530003451 | S.TRA | 2SC4835GRL | T | 133.5/143.5 |
| Q1502 | 1530003451 | S.TRA | 2SC4835GRL | T | 120.4/143.5 |
| Q1651 | 1530002601 | S.TRA | 2SC4215-O(TE85RF) | B | 105.7/140.4 |
| Q1701 | 1590001960 | S.TRA | XP4311(TX) | T | 106.6/43.9 |
| Q1702 | 1590001960 | S.TRA | XP4311(TX) | T | 148.9/147.2 |
| Q1703 | 1590001960 | S.TRA | XP4311(TX) | T | 146.4/147.2 |
| D101 | 1750000520 | S.DIO | DAN222TL | T | 41.8/86.2 |
| D152 | 1720000590 | S.VAR | MA357(TX) | T | 17.6/59.9 |
| D153 | 1790000491 | S.DIO | HSM88ASTR-E | T | 27.2/60.4 |

Eqv.= This component is equivalent to the REF No. component listed above, and may be substituted on parts orders and repairs.

M.=Mounted side (T: Mounted on the Top side, B: Mounted on the Bottom side)
S.=Surface mount

## [RXPLL-B UNIT]

| REF NO. | PARTS NO. | DESCRIPTION | | M. | H/V LOCATION |
|---|---|---|---|---|---|
| D154 | 1790000491 | S.DIO | HSM88ASTR-E | T | 27.2/63.8 |
| D201 | 1750000520 | S.DIO | DAN222TL | T | 32.4/34.1 |
| D220 | 1720000590 | S.VAR | MA357(TX) | T | 50.8/31.8 |
| D221 | 1720000590 | S.VAR | MA357(TX) | T | 52.9/31.8 |
| D222 | 1790000620 | S.DIO | MA77(TX) | T | 82.6/29.8 |
| D230 | 1720000590 | S.VAR | MA357(TX) | T | 50.8/44.2 |
| D231 | 1720000590 | S.VAR | MA357(TX) | T | 52.9/44.2 |
| D232 | 1790000620 | S.DIO | MA77(TX) | T | 82.6/42.3 |
| D240 | 1720000590 | S.VAR | MA357(TX) | T | 50.8/56.7 |
| D241 | 1720000590 | S.VAR | MA357(TX) | T | 52.9/56.7 |
| D242 | 1790000620 | S.DIO | MA77(TX) | T | 82.6/54.8 |
| D250 | 1720000590 | S.VAR | MA357(TX) | T | 50.8/69.2 |
| D252 | 1790000620 | S.DIO | MA77(TX) | T | 82.6/67.3 |
| D261 | 1720000590 | S.VAR | MA357(TX) | T | 52.9/81.7 |
| D262 | 1790000620 | S.DIO | MA77(TX) | T | 82.6/79.8 |
| D270 | 1720000590 | S.VAR | MA357(TX) | T | 50.8/94.2 |
| D271 | 1720000590 | S.VAR | MA357(TX) | T | 52.4/96.8 |
| D272 | 1790000620 | S.DIO | MA77(TX) | T | 82.5/92.0 |
| D341 | 1790000620 | S.DIO | MA77(TX) | T | 90.1/37.2 |
| D342 | 1160000070 | S.DIO | DAN202K T146 | B | 81.1/47.7 |
| D362 | 1790000620 | S.DIO | MA77(TX) | T | 88.3/65.5 |
| D363 | 1790000620 | S.DIO | MA77(TX) | T | 88.3/62.0 |
| D421 | 1790000620 | S.DIO | MA77(TX) | T | 92.0/85.0 |
| D441 | 1790000620 | S.DIO | MA77(TX) | T | 89.7/74.5 |
| D501 | 1750000520 | S.DIO | DAN222TL | T | 42.0/132.0 |
| D542 | 1720000590 | S.VAR | MA357(TX) | T | 62.5/139.6 |
| D1101 | 1790000620 | S.DIO | MA77(TX) | T | 177.6/146.6 |
| D1102 | 1790000620 | S.DIO | MA77(TX) | T | 177.6/148.4 |
| D1351 | 1750000581 | S.DIO | 1SV307(TPH3F) | T | 140.9/71.2 |
| D1653 | 1750000550 | S.DIO | 1SS355 TE-17 | T | 138.9/167.2 |
| D1654 | 1750000550 | S.DIO | 1SS355 TE-17 | T | 142.5/167.2 |
| D1701 | 1790001670 | S.DIO | RB706F-40T106 | T | 170.5/160.8 |
| FI101 | 2020002090 | S.CER | SFECV10M7FD00-R0 (SFECV10.7MA5S) | T | 26.0/73.9 |
| FI1401 | 2030000321 | S.MON | DSF753SDF 64.555 MHz (FL-359A) | T | 116.3/88.6 |
| FI1402 | 2030000311 | S.MON | DSF753SDF 64.555 MHz (FL-360A) | T | 107.0/88.6 |
| FI1403 | 2030000520 | S.MON | DSF753SDF 64.555 MHz (FL-397) | T | 126.0/85.5 |
| L1 | 6200003261 | S.COI | NLV32T-101J | T | 10.8/15.4 |
| L2 | 6200003261 | S.COI | NLV32T-101J | T | 29.0/19.9 |
| L10 | 6200003950 | S.COI | HF50ACC 322513-T | T | 38.6/14.7 |
| L11 | 6200003950 | S.COI | HF50ACC 322513-T | T | 13.8/15.4 |
| L12 | 6200003950 | S.COI | HF50ACC 322513-T | T | 16.8/15.4 |
| L13 | 6200003950 | S.COI | HF50ACC 322513-T | T | 29.0/15.4 |
| L20 | 6200003321 | S.COI | NLV32T-3R3J | T | 86.0/123.9 |
| L30 | 6200005491 | S.COI | NLV32T-331J | T | 20.6/120.0 |
| L101 | 6200001831 | S.COI | NLV32T-100J | T | 38.3/72.8 |
| L151 | 6130002970 | COI | LB-343 | | |
| L152 | 6200001831 | S.COI | NLV32T-100J | T | 30.0/54.5 |
| L201 | 6200005011 | S.COI | NLV25T-100J | T | 22.2/45.0 |
| L211 | 6200003661 | S.COI | NLV25T-R68J | B | 45.5/35.3 |
| L220 | 6200010790 | S.COI | C2520C-3R9G-A | T | 51.9/37.5 |
| L221 | 6190001421 | COI | #E526GN-110502 | | |
| L222 | 6200010790 | S.COI | C2520C-3R9G-A | T | 76.2/37.7 |
| L230 | 6200010830 | S.COI | C2520C-3R3G-A | T | 51.9/50.0 |
| L231 | 6190001421 | COI | #E526GN-110502 | | |
| L232 | 6200010830 | S.COI | C2520C-3R3G-A | T | 76.2/50.2 |
| L240 | 6200010830 | S.COI | C2520C-3R3G-A | T | 51.9/62.5 |
| L241 | 6190001421 | COI | #E526GN-110502 | | |
| L242 | 6200010830 | S.COI | C2520C-3R3G-A | T | 76.2/62.7 |
| L250 | 6200010820 | S.COI | C2520C-2R7G-A | T | 51.9/74.9 |
| L251 | 6190001421 | COI | #E526GN-110502 | | |
| L252 | 6200010820 | S.COI | C2520C-2R7G-A | T | 76.2/75.2 |
| L260 | 6200010820 | S.COI | C2520C-2R7G-A | T | 51.9/87.5 |
| L261 | 6190001411 | COI | #E526GN-110501 | | |
| L262 | 6200010820 | S.COI | C2520C-2R7G-A | T | 76.2/87.7 |
| L270 | 6200010810 | S.COI | C2520C-2R2G-A | T | 51.9/99.8 |
| L271 | 6190001411 | COI | #E526GN-110501 | | |
| L272 | 6200010810 | S.COI | C2520C-2R2G-A | T | 76.0/100.2 |
| L280 | 6200005011 | S.COI | NLV25T-100J | T | 67.4/25.5 |
| L302 | 6200001831 | S.COI | NLV32T-100J | T | 89.4/42.7 |
| L331 | 6200002641 | S.COI | NLV25T-R15J | T | 95.1/34.1 |
| L332 | 6200002411 | S.COI | NLV25T-056J | B | 93.2/36.0 |
| L341 | 6200003261 | S.COI | NLV32T-101J | T | 87.1/39.7 |
| L351 | 6200001831 | S.COI | NLV32T-100J | T | 91.3/62.1 |
| L421 | 6200008641 | S.COI | NLV32T-391J | T | 87.1/81.0 |
| L441 | 6200002601 | S.COI | NLV25T-047J | T | 91.9/72.4 |
| L442 | 6200010730 | S.COI | C2520C-68NG-A | T | 90.6/78.2 |
| L451 | 6200002641 | S.COI | NLV25T-R15J | T | 95.0/81.0 |
| L452 | 6200003261 | S.COI | NLV32T-101J | T | 87.1/78.0 |
| L501 | 6200001831 | S.COI | NLV32T-100J | T | 31.0/125.8 |
| L530 | 6200003171 | S.COI | NLV32T-330J | T | 14.6/134.9 |
| L531 | 6200003171 | S.COI | NLV32T-330J | T | 14.6/130.8 |
| L532 | 6200003171 | S.COI | NLV32T-330J | T | 15.5/127.1 |
| L541 | 6200010790 | S.COI | C2520C-3R9G-A | T | 56.3/139.6 |
| L542 | 6190001421 | COI | #E526GN-110502 | | |
| L543 | 6200010790 | S.COI | C2520C-3R9G-A | T | 68.5/147.9 |
| L544 | 6200003261 | S.COI | NLV32T-101J | B | 65.9/142.1 |
| L545 | 6200003261 | S.COI | NLV32T-101J | B | 51.3/139.6 |
| L561 | 6200003261 | S.COI | NLV32T-101J | B | 64.0/156.0 |
| L562 | 6200001831 | S.COI | NLV32T-100J | B | 74.7/151.9 |
| L565 | 6150004250 | COI | LS-471A (C-14922) | | |
| L566 | 6150004250 | COI | LS-471A (C-14922) | | |
| L591 | 6200007790 | S.COI | LQW2BHNR15J03L | T | 60.5/171.5 |
| L601 | 6200001831 | S.COI | NLV32T-100J | T | 49.5/123.6 |
| L602 | 6200002641 | S.COI | NLV25T-R15J | T | 54.1/118.0 |
| L603 | 6200002841 | S.COI | NLV25T-R22J | T | 57.1/117.2 |
| L651 | 6200009300 | S.COI | ELJPA 100KF 10U | T | 15.6/176.3 |
| L681 | 6200002981 | S.COI | NLV32T-R56J | T | 37.4/176.2 |

## [RXPLL-B UNIT]

| REF NO. | PARTS NO. | DESCRIPTION | | M. | H/V LOCATION |
|---|---|---|---|---|---|
| L682 | 6200003041 | S.COI | NLV32T-R68J | T | 37.8/172.6 |
| L683 | 6200003051 | S.COI | NLV32T-R82J | T | 40.2/166.2 |
| L701 | 6200003261 | S.COI | NLV32T-101J | T | 23.6/120.0 |
| L702 | 6150004971 | S.COI | LS-522-LF | T | 37.6/108.6 |
| L703 | 6150004971 | S.COI | LS-522-LF | T | 37.5/118.5 |
| L1001 | 6190001650 | COI | ELC06D102E | | |
| L1002 | 6140004400 | COI | LR-499 | | |
| L1004 | 6140003890 | COI | LR-488 | | |
| L1005 | 6180001000 | COI | LAL 04NA 102K | | |
| L1006 | 6140003900 | COI | LR-489 | | |
| L1007 | 6140003800 | COI | LR-439 | | |
| L1008 | 6190001650 | COI | ELC06D102E | | |
| L1009 | 6190001650 | COI | ELC06D102E | | |
| L1010 | 6140003880 | COI | LR-486 | | |
| L1011 | 6140003880 | COI | LR-486 | | |
| L1012 | 6140003800 | COI | LR-439 | | |
| L1013 | 6200010680 | S.COI | C2520C-R22G-A (0.22U) | T | 155.0/55.2 |
| L1014 | 6200010680 | S.COI | C2520C-R22G-A (0.22U) | T | 158.0/12.5 |
| L1015 | 6200007790 | S.COI | LQW2BHNR15J03L | B | 163.6/27.5 |
| L1052 | 6200010740 | S.COI | C2520C-R27G-A | T | 177.8/74.6 |
| L1053 | 6200010740 | S.COI | C2520C-R27G-A | T | 173.8/73.5 |
| L1054 | 6200010740 | S.COI | C2520C-R27G-A | T | 169.4/72.6 |
| L1055 | 6140003960 | COI | LR-495 | | |
| L1056 | 6200010730 | S.COI | C2520C-68NG-A | T | 171.0/83.8 |
| L1058 | 6190001631 | COI | #E544EN-100021 | | |
| L1060 | 6200010730 | S.COI | C2520C-68NG-A | T | 149.1/76.4 |
| L1062 | 6200011450 | S.COI | C2520C-R39G-A | T | 145.1/81.5 |
| L1063 | 6200010650 | S.COI | C2520C-R12G-A (0.12U) | T | 141.0/82.6 |
| L1071 | 6200007780 | S.COI | LQW2BHNR12J03L | B | 164.9/79.2 |
| L1072 | 6200007780 | S.COI | LQW2BHNR12J03L | B | 168.0/76.1 |
| L1091 | 6200003950 | S.COI | HF50ACC 322513-T | B | 171.1/149.0 |
| L1092 | 6200003950 | S.COI | HF50ACC 322513-T | T | 149.8/136.5 |
| L1093 | 6200003950 | S.COI | HF50ACC 322513-T | T | 157.0/135.2 |
| L1101 | 6140003920 | COI | LR-491 | | |
| L1102 | 6200010650 | S.COI | C2520C-R12G-A (0.12U) | T | 176.9/117.9 |
| L1103 | 6180001250 | COI | LAL 04NA 3R3K | | |
| L1104 | 6200010870 | S.COI | C2520C-R33G-A (0.33U) | T | 178.4/135.9 |
| L1105 | 6140003910 | COI | LR-490 | | |
| L1151 | 6140004640 | COI | LR-519 | | |
| L1201 | 6200007780 | S.COI | LQW2BHNR12J03L | B | 119.4/17.5 |
| L1208 | 6140003800 | COI | LR-439 | | |
| L1209 | 6200001831 | S.COI | NLV32T-100J | T | 121.1/20.8 |
| L1210 | 6140004440 | COI | LR-503 | | |
| L1211 | 6200009690 | S.COI | LQH43CN101K03L | T | 115.7/34.6 |
| L1212 | 6200001831 | S.COI | NLV32T-100J | T | 106.8/20.8 |
| L1213 | 6140004440 | COI | LR-503 | | |
| L1214 | 6200009690 | S.COI | LQH43CN101K03L | T | 105.9/34.8 |
| L1216 | 6140003800 | COI | LR-439 | | |
| L1217 | 6200007750 | S.COI | LQW2BHN56NJ03L | T | 148.0/63.8 |
| L1218 | 6200007770 | S.COI | LQW2BHNR10J03L | T | 153.3/65.2 |
| L1219 | 6200007790 | S.COI | LQW2BHNR15J03L | T | 153.3/68.5 |
| L1220 | 6140000930 | COI | LR-116 | | |
| L1221 | 6200003261 | S.COI | NLV32T-101J | B | 149.6/110.9 |
| L1222 | 6150005460 | COI | LS-559 7K7 | | |
| L1223 | 6200007750 | S.COI | LQW2BHN56NJ03L | B | 151.3/100.8 |
| L1228 | 6200010870 | S.COI | C2520C-R33G-A (0.33U) | T | 158.8/71.4 |
| L1229 | 6200003950 | S.COI | HF50ACC 322513-T | B | 164.7/115.0 |
| L1301 | 6200008090 | S.COI | LQW2BHN68NJ03L | T | 157.2/111.9 |
| L1302 | 6200008090 | S.COI | LQW2BHN68NJ03L | T | 156.4/115.5 |
| L1303 | 6200008090 | S.COI | LQW2BHN68NJ03L | T | 153.4/117.5 |
| L1304 | 6200010870 | S.COI | C2520C-R33G-A (0.33U) | T | 153.8/123.0 |
| L1305 | 6200003001 | S.COI | NLV32T-R22J | T | 159.2/124.5 |
| L1306 | 6200001831 | S.COI | NLV32T-100J | B | 152.8/118.7 |
| L1307 | 6200003001 | S.COI | NLV32T-R22J | T | 153.4/112.0 |
| L1351 | 6200001831 | S.COI | NLV32T-100J | T | 143.0/76.4 |
| L1353 | 6200010740 | S.COI | C2520C-R27G-A | T | 141.6/67.6 |
| L1354 | 6200001831 | S.COI | NLV32T-100J | T | 136.5/68.1 |
| L1401 | 6150004280 | COI | LS-484B (C-14927) | | |
| L1402 | 6150004280 | COI | LS-484B (C-14927) | | |
| L1403 | 6150004280 | COI | LS-484B (C-14927) | | |
| L1404 | 6150004280 | COI | LS-484B (C-14927) | | |
| L1405 | 6200007770 | S.COI | LQW2BHNR10J03L | B | 112.5/111.4 |
| L1406 | 6200007750 | S.COI | LQW2BHN56NJ03L | B | 116.6/111.4 |
| L1407 | 6140003930 | COI | LR-492 | | |
| L1408 | 6190001621 | COI | #E544EN-100028 | | |
| L1409 | 6200003191 | S.COI | NLV32T-470J | B | 135.8/125.4 |
| L1410 | 6150004280 | COI | LS-484B (C-14927) | | |
| L1411 | 6150004280 | COI | LS-484B (C-14927) | | |
| L1501 | 6200003520 | S.COI | ELJFB 102K-F | T | 142.1/145.1 |
| L1652 | 6200002520 | S.COI | ELJNC R18K-F | T | 112.9/133.1 |
| L1653 | 6200001831 | S.COI | NLV32T-100J | B | 105.4/124.6 |
| L1654 | 6200001831 | S.COI | NLV32T-100J | B | 112.4/141.9 |
| L1655 | 6200001831 | S.COI | NLV32T-100J | B | 124.7/139.8 |
| L1701 | 6200001831 | S.COI | NLV32T-100J | T | 167.0/160.0 |
| L1702 | 6200003950 | S.COI | HF50ACC 322513-T | T | 175.6/169.8 |
| L1703 | 6200003950 | S.COI | HF50ACC 322513-T | T | 172.6/169.8 |
| L1704 | 6200003950 | S.COI | HF50ACC 322513-T | T | 169.6/169.8 |
| L1705 | 6200003950 | S.COI | HF50ACC 322513-T | T | 165.5/169.8 |
| L1803 | 6200003950 | S.COI | HF50ACC 322513-T | B | 132.1/54.8 |
| L1804 | 6200003950 | S.COI | HF50ACC 322513-T | B | 118.0/154.8 |
| L1805 | 6200003950 | S.COI | HF50ACC 322513-T | B | 155.2/132.0 |
| L1807 | 6200003950 | S.COI | HF50ACC 322513-T | B | 118.0/151.3 |
| L1808 | 6200003950 | S.COI | HF50ACC 322513-T | B | 141.3/162.0 |
| L1809 | 6200003950 | S.COI | HF50ACC 322513-T | B | 149.6/115.6 |
| R1 | 7030005871 | S.RES | ERA3YKD 104V (100K) | T | 32.5/19.2 |
| R2 | 7030005321 | S.RES | ERA3YED 103V (10K) | T | 31.2/19.2 |
| R3 | 7030003550 | S.RES | ERJ3GEYJ 822 V (8.2K) | T | 16.9/23.5 |
| R4 | 7030003550 | S.RES | ERJ3GEYJ 822 V (8.2K) | T | 16.9/24.8 |
| R5 | 7030003550 | S.RES | ERJ3GEYJ 822 V (8.2K) | T | 13.3/31.3 |
| R6 | 7030003550 | S.RES | ERJ3GEYJ 822 V (8.2K) | T | 13.3/30.0 |
| R7 | 7030003500 | S.RES | ERJ3GEYJ 332 V (3.3K) | B | 26.8/13.0 |
| R8 | 7030003470 | S.RES | ERJ3GEYJ 182 V (1.8K) | B | 28.2/14.7 |
| R9 | 7030003680 | S.RES | ERJ3GEYJ 104 V (100K) | B | 27.5/10.6 |

Eqv.= This component is equivalent to the REF No. component listed above, and may be substituted on parts orders and repairs.

M.=Mounted side (T: Mounted on the Top side, B: Mounted on the Bottom side)
S.=Surface mount

## [RXPLL-B UNIT]

| REF NO. | PARTS NO. | DESCRIPTION | M. | H/V LOCATION |
|---|---|---|---|---|
| R10 | 7030003360 | S.RES ERJ3GEYJ 221 V (220) | T | 19.0/16.0 |
| R11 | 7030003360 | S.RES ERJ3GEYJ 221 V (220) | T | 20.3/16.0 |
| R12 | 7030003360 | S.RES ERJ3GEYJ 221 V (220) | T | 22.5/16.0 |
| R13 | 7030003360 | S.RES ERJ3GEYJ 221 V (220) | T | 23.8/16.0 |
| R14 | 7030003360 | S.RES ERJ3GEYJ 221 V (220) | T | 25.1/16.0 |
| R15 | 7030003360 | S.RES ERJ3GEYJ 221 V (220) | T | 26.4/16.3 |
| R16 | 7030003360 | S.RES ERJ3GEYJ 221 V (220) | T | 32.5/15.4 |
| R17 | 7030003360 | S.RES ERJ3GEYJ 221 V (220) | T | 33.8/15.4 |
| R30 | 7030003240 | S.RES ERJ3GEYJ 220 V (22) | T | 21.7/113.7 |
| R31 | 7030003600 | S.RES ERJ3GEYJ 223 V (22K) | T | 20.4/111.1 |
| R32 | 7030003320 | S.RES ERJ3GEYJ 101 V (100) | T | 23.0/113.7 |
| R33 | 7030003340 | S.RES ERJ3GEYJ 151 V (150) | T | 19.1/115.0 |
| R51 | 7030011030 | S.RES ERJ1TYJ 270U (27) | T | 66.3/13.9 |
| R61 | 7030011030 | S.RES ERJ1TYJ 270U (27) | T | 45.1/13.9 |
| R101 | 7030003800 | S.RES ERJ3GEYJ 105 V (1M) | T | 34.2/101.5 |
| R102 | 7030003860 | S.RES ERJ3GE JPW V | B | 35.6/88.7 |
| R103 | 7030007230 | S.RES ERA3YED 102V (1K) | T | 25.1/100.3 |
| R104 | 7030007230 | S.RES ERA3YED 102V (1K) | T | 26.4/100.3 |
| R105 | 7030007230 | S.RES ERA3YED 102V (1K) | T | 27.8/100.3 |
| R106 | 7030003360 | S.RES ERJ3GEYJ 221 V (220) | T | 29.1/100.3 |
| R107 | 7030003320 | S.RES ERJ3GEYJ 101 V (100) | T | 38.1/101.5 |
| R108 | 7030007230 | S.RES ERA3YED 102V (1K) | T | 28.9/79.0 |
| R109 | 7030007230 | S.RES ERA3YED 102V (1K) | T | 41.9/84.5 |
| R110 | 7030007220 | S.RES ERA3YED 202V (2K) | T | 14.6/100.5 |
| R111 | 7030007220 | S.RES ERA3YED 202V (2K) | T | 17.2/100.5 |
| R112 | 7030007220 | S.RES ERA3YED 202V (2K) | T | 17.2/99.2 |
| R113 | 7030007220 | S.RES ERA3YED 202V (2K) | T | 17.2/97.9 |
| R114 | 7030007220 | S.RES ERA3YED 202V (2K) | T | 17.2/96.6 |
| R115 | 7030007220 | S.RES ERA3YED 202V (2K) | T | 17.2/95.2 |
| R116 | 7030007220 | S.RES ERA3YED 202V (2K) | T | 17.2/93.9 |
| R117 | 7030007220 | S.RES ERA3YED 202V (2K) | T | 17.2/92.6 |
| R118 | 7030007200 | S.RES ERA3YEB 202V (2K) | T | 17.2/91.3 |
| R119 | 7030007200 | S.RES ERA3YEB 202V (2K) | T | 17.2/89.6 |
| R120 | 7030007200 | S.RES ERA3YEB 202V (2K) | T | 17.2/87.0 |
| R121 | 7030007200 | S.RES ERA3YEB 202V (2K) | T | 17.2/84.4 |
| R122 | 7030007200 | S.RES ERA3YEB 202V (2K) | T | 17.2/81.8 |
| R123 | 7030007230 | S.RES ERA3YED 102V (1K) | T | 14.6/99.2 |
| R124 | 7030007230 | S.RES ERA3YED 102V (1K) | T | 14.6/97.9 |
| R125 | 7030007230 | S.RES ERA3YED 102V (1K) | T | 14.6/96.6 |
| R126 | 7030007230 | S.RES ERA3YED 102V (1K) | T | 14.6/95.2 |
| R127 | 7030007230 | S.RES ERA3YED 102V (1K) | T | 14.6/93.9 |
| R128 | 7030007230 | S.RES ERA3YED 102V (1K) | T | 14.6/92.6 |
| R129 | 7030007210 | S.RES ERA3YEB 102V (1K) | T | 14.6/91.3 |
| R130 | 7030007210 | S.RES ERA3YEB 102V (1K) | T | 14.6/89.6 |
| R131 | 7030007210 | S.RES ERA3YEB 102V (1K) | T | 14.6/88.3 |
| R132 | 7030007210 | S.RES ERA3YEB 102V (1K) | T | 14.6/87.0 |
| R133 | 7030007210 | S.RES ERA3YEB 102V (1K) | T | 14.6/85.7 |
| R134 | 7030009861 | S.RES ERA3YED 471V (470) | T | 14.6/84.4 |
| R135 | 7030003860 | S.RES ERJ3GE JPW V | T | 30.4/75.8 |
| R136 | 7030003800 | S.RES ERJ3GEYJ 105 V (1M) | T | 33.0/77.1 |
| R137 | 7030003200 | S.RES ERJ3GEYJ 100 V (10) | T | 35.5/75.8 |
| R138 | 7030003860 | S.RES ERJ3GE JPW V | T | 16.8/78.6 |
| R139 | 7030003860 | S.RES ERJ3GE JPW V | T | 17.6/75.8 |
| R150 | 7030003330 | S.RES ERJ3GEYJ 121 V (120) | B | 37.9/86.2 |
| R151 | 7030003220 | S.RES ERJ3GEYJ 150 V (15) | B | 38.6/88.1 |
| R152 | 7030005871 | S.RES ERA3YKD 104V (100K) | B | 36.2/82.6 |
| R153 | 7030005321 | S.RES ERA3YED 103V (10K) | T | 19.2/62.7 |
| R154 | 7030003320 | S.RES ERJ3GEYJ 101 V (100) | B | 26.3/54.1 |
| R155 | 7030003350 | S.RES ERJ3GEYJ 181 V (180) | B | 23.0/54.1 |
| R156 | 7030005871 | S.RES ERA3YKD 104V (100K) | T | 24.6/53.1 |
| R157 | 7030005871 | S.RES ERA3YKD 104V (100K) | T | 26.9/58.0 |
| R158 | 7030003340 | S.RES ERJ3GEYJ 151 V (150) | T | 30.0/57.3 |
| R159 | 7030003320 | S.RES ERJ3GEYJ 101 V (100) | B | 33.6/61.4 |
| R160 | 7030003360 | S.RES ERJ3GEYJ 221 V (220) | B | 33.6/59.6 |
| R161 | 7030003640 | S.RES ERJ3GEYJ 473 V (47K) | B | 33.6/54.8 |
| R163 | 7030003220 | S.RES ERJ3GEYJ 150 V (15) | B | 30.3/56.6 |
| R164 | 7030003310 | S.RES ERJ3GEYJ 820 V (82) | B | 34.1/70.4 |
| R165 | 7030003320 | S.RES ERJ3GEYJ 101 V (100) | B | 30.8/70.4 |
| R166 | 7030003320 | S.RES ERJ3GEYJ 101 V (100) | B | 30.8/72.2 |
| R167 | 7030003240 | S.RES ERJ3GEYJ 220 V (22) | B | 37.4/75.8 |
| R168 | 7030003360 | S.RES ERJ3GEYJ 221 V (220) | B | 34.1/75.8 |
| R169 | 7030003640 | S.RES ERJ3GEYJ 473 V (47K) | B | 30.8/75.8 |
| R202 | 7030007230 | S.RES ERA3YED 102V (1K) | T | 22.2/39.7 |
| R203 | 7030007230 | S.RES ERA3YED 102V (1K) | T | 22.2/38.4 |
| R204 | 7030003360 | S.RES ERJ3GEYJ 221 V (220) | T | 22.2/37.1 |
| R205 | 7030005321 | S.RES ERA3YED 103V (10K) | T | 27.4/34.0 |
| R206 | 7030003220 | S.RES ERJ3GEYJ 150 V (15) | T | 31.1/45.7 |
| R210 | 7030005351 | S.RES ERA3YED 182V (1.8K) | T | 35.7/37.5 |
| R217 | 7030009651 | S.RES ERA3YHD 820V (82) | B | 40.5/42.8 |
| R219 | 7030009691 | S.RES ERA3YED 101V (100) | B | 40.1/35.7 |
| R220 | 7030005871 | S.RES ERA3YKD 104V (100K) | T | 73.2/37.6 |
| R221 | 7030005871 | S.RES ERA3YKD 104V (100K) | T | 72.3/30.9 |
| R222 | 7030003400 | S.RES ERJ3GEYJ 471 V (470) | T | 81.4/38.3 |
| R223 | 7030007230 | S.RES ERA3YED 102V (1K) | T | 81.9/31.9 |
| R224 | 7030003320 | S.RES ERJ3GEYJ 101 V (100) | T | 73.2/40.2 |
| R230 | 7030005871 | S.RES ERA3YKD 104V (100K) | T | 73.2/50.1 |
| R231 | 7030005871 | S.RES ERA3YKD 104V (100K) | T | 72.3/43.3 |
| R232 | 7030003360 | S.RES ERJ3GEYJ 221 V (220) | T | 81.4/50.8 |
| R233 | 7030007230 | S.RES ERA3YED 102V (1K) | T | 81.9/44.4 |
| R234 | 7030003320 | S.RES ERJ3GEYJ 101 V (100) | T | 73.2/52.7 |
| R240 | 7030005871 | S.RES ERA3YKD 104V (100K) | T | 73.2/62.6 |
| R241 | 7030005871 | S.RES ERA3YKD 104V (100K) | T | 72.3/55.8 |
| R242 | 7030003360 | S.RES ERJ3GEYJ 221 V (220) | T | 81.4/63.3 |
| R243 | 7030007230 | S.RES ERA3YED 102V (1K) | T | 81.9/56.9 |
| R244 | 7030003320 | S.RES ERJ3GEYJ 101 V (100) | T | 73.2/65.2 |
| R250 | 7030005871 | S.RES ERA3YKD 104V (100K) | T | 73.2/75.1 |
| R251 | 7030005871 | S.RES ERA3YKD 104V (100K) | T | 72.3/68.4 |
| R252 | 7030003360 | S.RES ERJ3GEYJ 221 V (220) | T | 81.4/75.8 |
| R253 | 7030007230 | S.RES ERA3YED 102V (1K) | T | 81.9/69.4 |
| R254 | 7030003320 | S.RES ERJ3GEYJ 101 V (100) | T | 73.2/77.7 |
| R260 | 7030005871 | S.RES ERA3YKD 104V (100K) | T | 73.2/87.6 |
| R261 | 7030005871 | S.RES ERA3YKD 104V (100K) | T | 72.3/80.9 |
| R262 | 7030003400 | S.RES ERJ3GEYJ 471 V (470) | T | 81.4/88.3 |
| R263 | 7030007230 | S.RES ERA3YED 102V (1K) | T | 81.9/81.9 |
| R264 | 7030003320 | S.RES ERJ3GEYJ 101 V (100) | T | 73.2/90.2 |

## [RXPLL-B UNIT]

| REF NO. | PARTS NO. | DESCRIPTION | M. | H/V LOCATION |
|---|---|---|---|---|
| R270 | 7030005871 | S.RES ERA3YKD 104V (100K) | T | 73.2/99.5 |
| R271 | 7030005871 | S.RES ERA3YKD 104V (100K) | T | 72.3/92.8 |
| R272 | 7030003360 | S.RES ERJ3GEYJ 221 V (220) | T | 81.4/100.8 |
| R273 | 7030007230 | S.RES ERA3YED 102V (1K) | T | 81.9/94.0 |
| R274 | 7030003320 | S.RES ERJ3GEYJ 101 V (100) | T | 73.2/102.1 |
| R301 | 7030003200 | S.RES ERJ3GEYJ 100 V (10) | T | 86.5/30.6 |
| R302 | 7030007230 | S.RES ERA3YED 102V (1K) | T | 86.5/29.3 |
| R303 | 7030003360 | S.RES ERJ3GEYJ 221 V (220) | T | 92.1/28.0 |
| R304 | 7030003490 | S.RES ERJ3GEYJ 272 V (2.7K) | T | 94.0/30.1 |
| R305 | 7030003510 | S.RES ERJ3GEYJ 392 V (3.9K) | T | 95.3/30.1 |
| R306 | 7030003360 | S.RES ERJ3GEYJ 221 V (220) | T | 94.8/32.2 |
| R307 | 7030009841 | S.RES ERA3YHD 330V (33) | T | 92.1/32.2 |
| R308 | 7030009851 | S.RES ERA3YED 271V (270) | B | 92.6/43.4 |
| R309 | 7030003540 | S.RES ERJ3GEYJ 682 V (6.8K) | B | 89.1/47.0 |
| R310 | 7030003500 | S.RES ERJ3GEYJ 332 V (3.3K) | B | 92.6/47.0 |
| R311 | 7030003350 | S.RES ERJ3GEYJ 181 V (180) | B | 89.1/45.2 |
| R312 | 7030003360 | S.RES ERJ3GEYJ 221 V (220) | B | 92.5/27.8 |
| R313 | 7030003490 | S.RES ERJ3GEYJ 272 V (2.7K) | B | 91.2/23.1 |
| R314 | 7030003510 | S.RES ERJ3GEYJ 392 V (3.9K) | B | 88.3/23.1 |
| R315 | 7030003360 | S.RES ERJ3GEYJ 221 V (220) | B | 87.6/25.1 |
| R316 | 7030003280 | S.RES ERJ3GEYJ 470 V (47) | B | 78.3/26.2 |
| R317 | 7030006220 | S.RES ERJ12YJ470U (47) | B | 90.1/31.5 |
| R318 | 7030009841 | S.RES ERA3YHD 330V (33) | B | 92.6/41.6 |
| R341 | 7030007230 | S.RES ERA3YED 102V (1K) | T | 92.1/40.1 |
| R342 | 7030005321 | S.RES ERA3YED 103V (10K) | T | 86.5/32.2 |
| R343 | 7030007230 | S.RES ERA3YED 102V (1K) | T | 89.3/34.8 |
| R351 | 7030003200 | S.RES ERJ3GEYJ 100 V (10) | B | 89.1/52.4 |
| R352 | 7030010980 | S.RES ERA3YHD 470V (47) | T | 89.3/55.8 |
| R353 | 7030009591 | S.RES ERA3YED 472V (4.7K) | T | 89.3/54.5 |
| R354 | 7030009591 | S.RES ERA3YED 472V (4.7K) | T | 89.3/50.4 |
| R355 | 7030009591 | S.RES ERA3YED 472V (4.7K) | T | 89.3/53.2 |
| R356 | 7030003320 | S.RES ERJ3GEYJ 101 V (100) | T | 89.3/57.1 |
| R357 | 7310005390 | S.TRI EVM3VBQ3 4.7K (4.7K) | T | 93.6/52.7 |
| R358 | 7030010980 | S.RES ERA3YHD 470V (47) | T | 94.9/56.4 |
| R359 | 7030003320 | S.RES ERJ3GEYJ 101 V (100) | T | 94.9/59.0 |
| R360 | 7030003320 | S.RES ERJ3GEYJ 101 V (100) | B | 92.6/63.9 |
| R361 | 7030003490 | S.RES ERJ3GEYJ 272 V (2.7K) | B | 89.2/62.1 |
| R362 | 7030003510 | S.RES ERJ3GEYJ 392 V (3.9K) | B | 92.6/60.3 |
| R363 | 7030003320 | S.RES ERJ3GEYJ 101 V (100) | B | 92.6/65.7 |
| R364 | 7030003410 | S.RES ERJ3GEYJ 561 V (560) | T | 94.9/82.9 |
| R365 | 7030007860 | S.RES ERJ3GEYJ 8R2V (8.2) | T | 92.0/83.5 |
| R366 | 7030003410 | S.RES ERJ3GEYJ 561 V (560) | T | 94.9/84.2 |
| R368 | 7030005321 | S.RES ERA3YED 103V (10K) | T | 86.1/59.6 |
| R369 | 7030008240 | S.RES ERJ12Y0R00U | B | 95.4/57.2 |
| R421 | 7030007230 | S.RES ERA3YED 102V (1K) | T | 92.1/87.9 |
| R425 | 7030003410 | S.RES ERJ3GEYJ 561 V (560) | T | 90.1/81.6 |
| R427 | 7030003320 | S.RES ERJ3GEYJ 101 V (100) | B | 86.8/87.3 |
| R428 | 7030009861 | S.RES ERA3YED 471V (470) | B | 92.1/88.0 |
| R441 | 7030007230 | S.RES ERA3YED 102V (1K) | T | 92.1/75.6 |
| R442 | 7030005321 | S.RES ERA3YED 103V (10K) | T | 88.9/71.0 |
| R443 | 7030007230 | S.RES ERA3YED 102V (1K) | T | 88.9/72.3 |
| R501 | 7030003360 | S.RES ERJ3GEYJ 221 V (220) | T | 29.2/153.1 |
| R502 | 7030007230 | S.RES ERA3YED 102V (1K) | T | 27.9/153.1 |
| R503 | 7030007230 | S.RES ERA3YED 102V (1K) | T | 26.5/153.1 |
| R504 | 7030007230 | S.RES ERA3YED 102V (1K) | T | 25.2/153.1 |
| R506 | 7030003800 | S.RES ERJ3GEYJ 105 V (1M) | T | 34.1/154.5 |
| R509 | 7030003440 | S.RES ERJ3GEYJ 102 V (1K) | T | 42.5/136.1 |
| R510 | 7030007220 | S.RES ERA3YED 202V (2K) | T | 14.6/153.6 |
| R511 | 7030007220 | S.RES ERA3YED 202V (2K) | T | 17.2/153.6 |
| R512 | 7030007220 | S.RES ERA3YED 202V (2K) | T | 17.2/152.3 |
| R513 | 7030007220 | S.RES ERA3YED 202V (2K) | T | 17.2/151.0 |
| R514 | 7030007220 | S.RES ERA3YED 202V (2K) | T | 17.2/149.7 |
| R515 | 7030007220 | S.RES ERA3YED 202V (2K) | T | 17.2/148.3 |
| R516 | 7030007220 | S.RES ERA3YED 202V (2K) | T | 17.2/147.0 |
| R517 | 7030007220 | S.RES ERA3YED 202V (2K) | T | 17.2/145.7 |
| R518 | 7030007200 | S.RES ERA3YEB 202V (2K) | T | 17.2/144.4 |
| R519 | 7030007200 | S.RES ERA3YEB 202V (2K) | T | 17.2/142.7 |
| R520 | 7030007200 | S.RES ERA3YEB 202V (2K) | T | 17.2/141.4 |
| R521 | 7030007200 | S.RES ERA3YEB 202V (2K) | T | 17.2/140.1 |
| R522 | 7030007200 | S.RES ERA3YEB 202V (2K) | T | 17.2/138.8 |
| R523 | 7030007230 | S.RES ERA3YED 102V (1K) | T | 14.6/152.3 |
| R524 | 7030007230 | S.RES ERA3YED 102V (1K) | T | 14.6/151.0 |
| R525 | 7030007230 | S.RES ERA3YED 102V (1K) | T | 14.6/149.7 |
| R526 | 7030007230 | S.RES ERA3YED 102V (1K) | T | 14.6/148.3 |
| R527 | 7030007230 | S.RES ERA3YED 102V (1K) | T | 14.6/147.0 |
| R528 | 7030007230 | S.RES ERA3YED 102V (1K) | T | 14.6/145.7 |
| R529 | 7030007210 | S.RES ERA3YEB 102V (1K) | T | 14.6/144.4 |
| R530 | 7030007210 | S.RES ERA3YEB 102V (1K) | T | 14.6/142.7 |
| R531 | 7030007210 | S.RES ERA3YEB 102V (1K) | T | 14.6/141.4 |
| R532 | 7030007210 | S.RES ERA3YEB 102V (1K) | T | 14.6/140.1 |
| R533 | 7030007210 | S.RES ERA3YEB 102V (1K) | T | 14.6/138.8 |
| R534 | 7030003860 | S.RES ERJ3GE JPW V | T | 22.2/127.6 |
| R535 | 7030003800 | S.RES ERJ3GEYJ 105 V (1M) | T | 24.8/129.8 |
| R536 | 7030003200 | S.RES ERJ3GEYJ 100 V (10) | T | 28.0/128.3 |
| R537 | 7030007230 | S.RES ERA3YED 102V (1K) | T | 30.3/131.9 |
| R538 | 7030003360 | S.RES ERJ3GEYJ 221 V (220) | B | 34.9/146.5 |
| R540 | 7030007230 | S.RES ERA3YED 102V (1K) | B | 52.3/142.8 |
| R544 | 7030005871 | S.RES ERA3YKD 104V (100K) | T | 69.4/140.4 |
| R545 | 7030005871 | S.RES ERA3YKD 104V (100K) | T | 69.4/139.1 |
| R546 | 7030009861 | S.RES ERA3YED 471V (470) | T | 67.5/150.7 |
| R548 | 7030009591 | S.RES ERA3YED 472V (4.7K) | B | 43.4/136.5 |
| R550 | 7030009691 | S.RES ERA3YED 101V (100) | B | 43.4/134.7 |
| R554 | 7030009891 | S.RES ERA3YED 151V (150) | B | 47.2/133.9 |
| R555 | 7030003380 | S.RES ERJ3GEYJ 331 V (330) | B | 61.9/142.1 |
| R556 | 7030005981 | S.RES ERA3YED 333V (33K) | B | 44.3/128.2 |
| R561 | 7030003200 | S.RES ERJ3GEYJ 100 V (10) | T | 71.3/148.5 |
| R562 | 7030003360 | S.RES ERJ3GEYJ 221 V (220) | T | 65.7/155.5 |
| R563 | 7030003490 | S.RES ERJ3GEYJ 272 V (2.7K) | T | 70.5/151.9 |
| R564 | 7030003510 | S.RES ERJ3GEYJ 392 V (3.9K) | T | 70.5/150.6 |
| R565 | 7030003360 | S.RES ERJ3GEYJ 221 V (220) | T | 67.0/155.5 |
| R570 | 7030003230 | S.RES ERJ3GEYJ 180 V (18) | T | 63.1/155.5 |
| R571 | 7030003230 | S.RES ERJ3GEYJ 180 V (18) | T | 58.5/155.0 |
| R572 | 7030003290 | S.RES ERJ3GEYJ 560 V (56) | B | 57.2/156.3 |
| R573 | 7030003270 | S.RES ERJ3GEYJ 390 V (39) | T | 61.8/155.5 |
| R574 | 7030003240 | S.RES ERJ3GEYJ 220 V (22) | T | 60.5/155.5 |

Eqv.= This component is equivalent to the REF No. component listed above, and may be substituted on parts orders and repairs.

M.=Mounted side (T: Mounted on the Top side, B: Mounted on the Bottom side)
S.=Surface mount

## [RXPLL-B UNIT]

| REF NO. | PARTS NO. | DESCRIPTION | M. | H/V LOCATION |
|---|---|---|---|---|
| R575 | 7030003270 | S.RES ERJ3GEYJ 390 V (39) | T | 58.5/156.3 |
| R580 | 7030009861 | S.RES ERA3YED 471V (470) | T | 41.9/153.7 |
| R581 | 7030003360 | S.RES ERJ3GEYJ 221 V (220) | T | 41.9/145.5 |
| R582 | 7030003600 | S.RES ERJ3GEYJ 223 V (22K) | T | 41.9/149.5 |
| R587 | 7030003300 | S.RES ERJ3GEYJ 680 V (68) | T | 55.7/157.6 |
| R588 | 7030003340 | S.RES ERJ3GEYJ 151 V (150) | T | 58.5/158.9 |
| R589 | 7030003300 | S.RES ERJ3GEYJ 680 V (68) | T | 55.7/158.9 |
| R591 | 7030003320 | S.RES ERJ3GEYJ 101 V (100) | T | 58.2/169.9 |
| R592 | 7030005321 | S.RES ERA3YED 103V (10K) | T | 58.5/167.9 |
| R593 | 7030003480 | S.RES ERJ3GEYJ 222 V (2.2K) | T | 58.5/165.1 |
| R594 | 7030003320 | S.RES ERJ3GEYJ 101 V (100) | B | 61.9/168.1 |
| R595 | 7030003640 | S.RES ERJ3GEYJ 473 V (47K) | B | 55.9/165.3 |
| R596 | 7030003540 | S.RES ERJ3GEYJ 682 V (6.8K) | B | 54.7/168.9 |
| R601 | 7030009851 | S.RES ERA3YED 271V (270) | T | 51.7/118.2 |
| R602 | 7030003470 | S.RES ERJ3GEYJ 182 V (1.8K) | T | 49.5/120.1 |
| R606 | 7030003360 | S.RES ERJ3GEYJ 221 V (220) | T | 45.3/115.6 |
| R607 | 7030003480 | S.RES ERJ3GEYJ 222 V (2.2K) | T | 48.6/115.4 |
| R608 | 7030007230 | S.RES ERA3YED 102V (1K) | T | 49.9/115.4 |
| R651 | 7030007230 | S.RES ERA3YED 102V (1K) | B | 23.5/177.1 |
| R652 | 7030003360 | S.RES ERJ3GEYJ 221 V (220) | T | 13.5/170.8 |
| R653 | 7030007230 | S.RES ERA3YED 102V (1K) | T | 13.5/169.5 |
| R654 | 7030007230 | S.RES ERA3YED 102V (1K) | T | 13.5/168.2 |
| R656 | 7030003800 | S.RES ERJ3GEYJ 105 V (1M) | T | 15.0/161.4 |
| R657 | 7030003320 | S.RES ERJ3GEYJ 101 V (100) | T | 20.2/161.4 |
| R661 | 7030007220 | S.RES ERA3YED 202V (2K) | T | 31.7/162.8 |
| R662 | 7030007220 | S.RES ERA3YED 202V (2K) | T | 31.7/164.1 |
| R663 | 7030007220 | S.RES ERA3YED 202V (2K) | T | 31.7/165.4 |
| R664 | 7030007220 | S.RES ERA3YED 202V (2K) | T | 31.7/166.7 |
| R665 | 7030007220 | S.RES ERA3YED 202V (2K) | T | 31.7/168.0 |
| R666 | 7030007220 | S.RES ERA3YED 202V (2K) | T | 31.7/170.6 |
| R667 | 7030007220 | S.RES ERA3YED 202V (2K) | T | 31.7/171.9 |
| R668 | 7030007220 | S.RES ERA3YED 202V (2K) | T | 31.7/173.2 |
| R669 | 7030007200 | S.RES ERA3YEB 202V (2K) | T | 31.7/174.5 |
| R670 | 7030007200 | S.RES ERA3YEB 202V (2K) | T | 31.7/175.8 |
| R671 | 7030007200 | S.RES ERA3YEB 202V (2K) | T | 31.7/177.1 |
| R673 | 7030007230 | S.RES ERA3YED 102V (1K) | T | 34.3/165.4 |
| R674 | 7030007230 | S.RES ERA3YED 102V (1K) | T | 34.3/166.7 |
| R675 | 7030007230 | S.RES ERA3YED 102V (1K) | T | 34.3/168.0 |
| R676 | 7030007230 | S.RES ERA3YED 102V (1K) | T | 34.3/169.3 |
| R677 | 7030007230 | S.RES ERA3YED 102V (1K) | T | 34.3/170.6 |
| R678 | 7030007230 | S.RES ERA3YED 102V (1K) | T | 34.3/171.9 |
| R679 | 7030007210 | S.RES ERA3YEB 102V (1K) | T | 34.3/173.2 |
| R680 | 7030007210 | S.RES ERA3YEB 102V (1K) | T | 34.3/174.5 |
| R681 | 7030007210 | S.RES ERA3YEB 102V (1K) | T | 34.3/175.8 |
| R683 | 7030003860 | S.RES ERJ3GE JPW V | B | 58.4/167.8 |
| R685 | 7030003460 | S.RES ERJ3GEYJ 152 V (1.5K) | T | 38.4/169.7 |
| R686 | 7030003320 | S.RES ERJ3GEYJ 101 V (100) | T | 40.3/163.4 |
| R687 | 7030003470 | S.RES ERJ3GEYJ 182 V (1.8K) | T | 37.4/165.1 |
| R688 | 7030003480 | S.RES ERJ3GEYJ 222 V (2.2K) | T | 34.3/162.8 |
| R689 | 7030003360 | S.RES ERJ3GEYJ 221 V (220) | T | 33.6/161.5 |
| R690 | 7030009851 | S.RES ERA3YED 271V (270) | T | 46.4/165.3 |
| R691 | 7030003230 | S.RES ERJ3GEYJ 180 V (18) | T | 48.4/164.8 |
| R692 | 7030009851 | S.RES ERA3YED 271V (270) | T | 46.4/166.6 |
| R693 | 7030003360 | S.RES ERJ3GEYJ 221 V (220) | T | 37.1/169.7 |
| R704 | 7030009841 | S.RES ERA3YHD 330V (33) | T | 30.8/113.7 |
| R705 | 7030003600 | S.RES ERJ3GEYJ 223 V (22K) | T | 29.5/113.7 |
| R706 | 7030005321 | S.RES ERA3YED 103V (10K) | T | 28.2/113.7 |
| R707 | 7030009861 | S.RES ERA3YED 471V (470) | T | 30.8/108.1 |
| R708 | 7030003410 | S.RES ERJ3GEYJ 561 V (560) | T | 43.3/118.8 |
| R709 | 7030007860 | S.RES ERJ3GEYJ 8R2V (8.2) | T | 43.3/116.0 |
| R710 | 7030003410 | S.RES ERJ3GEYJ 561 V (560) | T | 43.8/121.1 |
| R711 | 7030003320 | S.RES ERJ3GEYJ 101 V (100) | T | 38.0/154.5 |
| R1000 | 7030003320 | S.RES ERJ3GEYJ 101 V (100) | B | 177.2/11.2 |
| R1003 | 7030010980 | S.RES ERA3YHD 470V (47) | T | 162.0/13.4 |
| R1004 | 7030007230 | S.RES ERA3YED 102V (1K) | B | 166.4/12.9 |
| R1005 | 7030003550 | S.RES ERJ3GEYJ 822 V (8.2K) | T | 144.0/26.1 |
| R1006 | 7030007230 | S.RES ERA3YED 102V (1K) | T | 145.3/26.1 |
| R1007 | 7030004030 | S.RES ERJ3GEYJ 5R6 V (5.6) | B | 153.7/33.7 |
| R1008 | 7030003240 | S.RES ERJ3GEYJ 220 V (22) | T | 144.0/36.4 |
| R1009 | 7030010980 | S.RES ERA3YHD 470V (47) | T | 182.4/29.3 |
| R1010 | 7030010980 | S.RES ERA3YHD 470V (47) | T | 154.5/33.2 |
| R1013 | 7030007230 | S.RES ERA3YED 102V (1K) | B | 172.7/40.8 |
| R1014 | 7030007230 | S.RES ERA3YED 102V (1K) | B | 156.7/40.8 |
| R1015 | 7030003530 | S.RES ERJ3GEYJ 562 V (5.6K) | B | 172.7/45.4 |
| R1016 | 7030003530 | S.RES ERJ3GEYJ 562 V (5.6K) | B | 156.7/45.4 |
| R1017 | 7030003530 | S.RES ERJ3GEYJ 562 V (5.6K) | B | 169.7/12.9 |
| R1020 | 7030003390 | S.RES ERJ3GEYJ 391 V (390) | T | 179.6/18.4 |
| R1021 | 7030003220 | S.RES ERJ3GEYJ 150 V (15) | T | 177.0/19.4 |
| R1022 | 7030003390 | S.RES ERJ3GEYJ 391 V (390) | T | 180.9/19.4 |
| R1023 | 7030010980 | S.RES ERA3YHD 470V (47) | B | 149.4/33.5 |
| R1024 | 7030003200 | S.RES ERJ3GEYJ 100 V (10) | B | 150.2/31.4 |
| R1025 | 7030003300 | S.RES ERJ3GEYJ 680 V (68) | T | 178.3/19.4 |
| R1026 | 7030003480 | S.RES ERJ3GEYJ 222 V (2.2K) | B | 171.2/14.2 |
| R1027 | 7030003200 | S.RES ERJ3GEYJ 100 V (10) | B | 176.5/38.3 |
| R1028 | 7030003200 | S.RES ERJ3GEYJ 100 V (10) | B | 160.5/38.3 |
| R1029 | 7030010980 | S.RES ERA3YHD 470V (47) | B | 178.3/46.2 |
| R1030 | 7030010980 | S.RES ERA3YHD 470V (47) | B | 162.3/46.2 |
| R1051 | 7030003800 | S.RES ERJ3GEYJ 105 V (1M) | T | 178.6/93.1 |
| R1054 | 7030011500 | S.RES ERA3YHD 270V (27) | T | 149.2/83.2 |
| R1055 | 7030000010 | S.RES MCR10EZHJ JPW (000) | T | 162.1/76.6 |
| R1056 | 7030000010 | S.RES MCR10EZHJ JPW (000) | T | 177.5/71.1 |
| R1071 | 7030010980 | S.RES ERA3YHD 470V (47) | B | 165.9/76.5 |
| R1072 | 7030000010 | S.RES MCR10EZHJ JPW (000) | T | 134.0/84.2 |
| R1073 | 7030000010 | S.RES MCR10EZHJ JPW (000) | T | 135.5/85.7 |
| R1101 | 7310004860 | S.TRI EVM-3YSX50 B53 (502) | T | 180.1/90.2 |
| R1102 | 7030005871 | S.RES ERA3YKD 104V (100K) | B | 180.2/100.6 |
| R1103 | 7030007680 | S.RES ERJ8ENF 47R0V (47) | T | 181.7/104.7 |
| R1104 | 7030007680 | S.RES ERJ8ENF 47R0V (47) | T | 173.6/107.2 |
| R1105 | 7030003500 | S.RES ERJ3GEYJ 332 V (3.3K) | T | 176.7/87.7 |
| R1106 | 7030009620 | S.RES ERJ12YJ120U (12) | B | 179.6/117.9 |
| R1107 | 7030010980 | S.RES ERA3YHD 470V (47) | T | 175.6/120.3 |
| R1109 | 7030007180 | S.RES ERJ12YJ150U (15) | B | 176.6/125.7 |
| R1110 | 7030003480 | S.RES ERJ3GEYJ 222 V (2.2K) | B | 168.5/131.7 |
| R1111 | 7030003480 | S.RES ERJ3GEYJ 222 V (2.2K) | T | 166.2/130.4 |
| R1113 | 7030003480 | S.RES ERJ3GEYJ 222 V (2.2K) | T | 166.2/131.7 |

## [RXPLL-B UNIT]

| REF NO. | PARTS NO. | DESCRIPTION | M. | H/V LOCATION |
|---|---|---|---|---|
| R1114 | 7030004040 | S.RES ERJ3GEYJ 4R7 V (4.7) | T | 179.3/125.3 |
| R1115 | 7030006240 | S.RES ERJ12YJ181U (180) | B | 176.6/130.0 |
| R1116 | 7030007230 | S.RES ERA3YED 102V (1K) | T | 175.7/135.3 |
| R1117 | 7030004040 | S.RES ERJ3GEYJ 4R7 V (4.7) | T | 175.7/134.0 |
| R1118 | 7030003480 | S.RES ERJ3GEYJ 222 V (2.2K) | T | 175.4/132.0 |
| R1119 | 7030003470 | S.RES ERJ3GEYJ 182 V (1.8K) | T | 178.0/132.0 |
| R1120 | 7030006070 | S.RES ERJ12YJ101U (100) | B | 177.4/141.0 |
| R1121 | 7030003240 | S.RES ERJ3GEYJ 220 V (22) | T | 178.6/139.6 |
| R1122 | 7030010980 | S.RES ERA3YHD 470V (47) | T | 172.0/131.1 |
| R1123 | 7030003480 | S.RES ERJ3GEYJ 222 V (2.2K) | T | 165.7/137.4 |
| R1124 | 7030003460 | S.RES ERJ3GEYJ 152 V (1.5K) | T | 165.7/140.0 |
| R1125 | 7030003420 | S.RES ERJ3GEYJ 681 V (680) | B | 171.0/142.2 |
| R1126 | 7030003200 | S.RES ERJ3GEYJ 100 V (10) | T | 168.4/142.2 |
| R1127 | 7030010980 | S.RES ERA3YHD 470V (47) | T | 174.6/142.9 |
| R1128 | 7030003470 | S.RES ERJ3GEYJ 182 V (1.8K) | T | 174.7/146.6 |
| R1129 | 7030003470 | S.RES ERJ3GEYJ 182 V (1.8K) | T | 174.7/148.4 |
| R1130 | 7030003480 | S.RES ERJ3GEYJ 222 V (2.2K) | T | 180.6/146.4 |
| R1131 | 7030003640 | S.RES ERJ3GEYJ 473 V (47K) | B | 177.4/90.8 |
| R1132 | 7310004860 | S.TRI EVM-3YSX50 B53 (502) | T | 179.4/84.3 |
| R1133 | 7030003500 | S.RES ERJ3GEYJ 332 V (3.3K) | T | 175.5/82.5 |
| R1134 | 7030003640 | S.RES ERJ3GEYJ 473 V (47K) | T | 175.5/83.8 |
| R1135 | 7030005871 | S.RES ERA3YKD 104V (100K) | T | 182.2/97.9 |
| R1151 | 7030003280 | S.RES ERJ3GEYJ 470 V (47) | T | 134.8/64.0 |
| R1152 | 7030003280 | S.RES ERJ3GEYJ 470 V (47) | B | 117.3/56.3 |
| R1203 | 7030000010 | S.RES MCR10EZHJ JPW (000) | T | 157.5/74.9 |
| R1211 | 7030003860 | S.RES ERJ3GE JPW V | T | 117.6/7.9 |
| R1212 | 7030003860 | S.RES ERJ3GE JPW V | T | 124.9/51.1 |
| R1213 | 7030003200 | S.RES ERJ3GEYJ 100 V (10) | B | 118.9/25.0 |
| R1214 | 7030003200 | S.RES ERJ3GEYJ 100 V (10) | B | 109.1/25.0 |
| R1216 | 7030010980 | S.RES ERA3YHD 470V (47) | B | 120.8/31.7 |
| R1217 | 7030010980 | S.RES ERA3YHD 470V (47) | B | 111.3/31.7 |
| R1220 | 7030010980 | S.RES ERA3YHD 470V (47) | T | 118.8/17.3 |
| R1221 | 7030007230 | S.RES ERA3YED 102V (1K) | T | 116.4/39.9 |
| R1222 | 7030003530 | S.RES ERJ3GEYJ 562 V (5.6K) | T | 116.4/38.6 |
| R1223 | 7030010980 | S.RES ERA3YHD 470V (47) | T | 109.3/17.1 |
| R1224 | 7030007230 | S.RES ERA3YED 102V (1K) | T | 106.6/39.9 |
| R1225 | 7030003530 | S.RES ERJ3GEYJ 562 V (5.6K) | T | 106.6/38.6 |
| R1226 | 7030003410 | S.RES ERJ3GEYJ 561 V (560) | T | 158.9/92.9 |
| R1227 | 7030003410 | S.RES ERJ3GEYJ 561 V (560) | T | 154.0/92.9 |
| R1228 | 7310004860 | S.TRI EVM-3YSX50 B53 (502) | T | 156.5/92.9 |
| R1229 | 7030003480 | S.RES ERJ3GEYJ 222 V (2.2K) | B | 156.2/117.5 |
| R1230 | 7030003480 | S.RES ERJ3GEYJ 222 V (2.2K) | B | 156.2/119.3 |
| R1231 | 7030003480 | S.RES ERJ3GEYJ 222 V (2.2K) | B | 156.2/121.1 |
| R1232 | 7030003600 | S.RES ERJ3GEYJ 223 V (22K) | T | 156.3/97.5 |
| R1233 | 7030010980 | S.RES ERA3YHD 470V (47) | B | 152.5/109.5 |
| R1301 | 7030010980 | S.RES ERA3YHD 470V (47) | B | 155.8/97.5 |
| R1302 | 7030003860 | S.RES ERJ3GE JPW V | T | 159.3/116.8 |
| R1304 | 7030003620 | S.RES ERJ3GEYJ 333 V (33K) | T | 156.5/123.2 |
| R1306 | 7030006230 | S.RES ERJ12YJ151U (150) | B | 153.8/124.8 |
| R1307 | 7030003300 | S.RES ERJ3GEYJ 680 V (68) | T | 156.5/128.4 |
| R1311 | 7030000010 | S.RES MCR10EZHJ JPW (000) | T | 140.3/98.9 |
| R1312 | 7030000010 | S.RES MCR10EZHJ JPW (000) | T | 143.2/104.1 |
| R1313 | 7030000010 | S.RES MCR10EZHJ JPW (000) | T | 143.2/101.6 |
| R1357 | 7030007230 | S.RES ERA3YED 102V (1K) | B | 140.7/70.5 |
| R1358 | 7030003530 | S.RES ERJ3GEYJ 562 V (5.6K) | B | 142.8/70.5 |
| R1359 | 7030010980 | S.RES ERA3YHD 470V (47) | T | 139.5/64.7 |
| R1360 | 7030007230 | S.RES ERA3YED 102V (1K) | B | 146.4/67.2 |
| R1361 | 7030003380 | S.RES ERJ3GEYJ 331 V (330) | T | 139.3/68.8 |
| R1362 | 7030005871 | S.RES ERA3YKD 104V (100K) | B | 144.6/70.5 |
| R1401 | 7030003200 | S.RES ERJ3GEYJ 100 V (10) | T | 131.5/103.4 |
| R1402 | 7030003300 | S.RES ERJ3GEYJ 680 V (68) | T | 126.4/111.0 |
| R1403 | 7030007230 | S.RES ERA3YED 102V (1K) | T | 132.0/107.7 |
| R1404 | 7030009861 | S.RES ERA3YED 471V (470) | T | 134.7/104.3 |
| R1405 | 7030003340 | S.RES ERJ3GEYJ 151 V (150) | T | 137.3/104.3 |
| R1406 | 7030009591 | S.RES ERA3YED 472V (4.7K) | T | 135.2/106.3 |
| R1407 | 7030003550 | S.RES ERJ3GEYJ 822 V (8.2K) | B | 135.5/104.4 |
| R1408 | 7030003200 | S.RES ERJ3GEYJ 100 V (10) | T | 121.0/109.0 |
| R1409 | 7030009591 | S.RES ERA3YED 472V (4.7K) | T | 120.6/114.9 |
| R1410 | 7030006091 | S.RES ERA3YED 822V (8.2K) | B | 124.2/114.4 |
| R1411 | 7030005871 | S.RES ERA3YKD 104V (100K) | T | 123.3/116.2 |
| R1412 | 7030003200 | S.RES ERJ3GEYJ 100 V (10) | T | 126.4/112.3 |
| R1413 | 7030003200 | S.RES ERJ3GEYJ 100 V (10) | T | 126.4/113.6 |
| R1414 | 7030005871 | S.RES ERA3YKD 104V (100K) | B | 120.9/114.4 |
| R1415 | 7030010980 | S.RES ERA3YHD 470V (47) | T | 127.1/114.9 |
| R1416 | 7030003320 | S.RES ERJ3GEYJ 101 V (100) | B | 139.7/123.0 |
| R1417 | 7030000010 | S.RES MCR10EZHJ JPW (000) | B | 130.1/124.5 |
| R1418 | 7030000010 | S.RES MCR10EZHJ JPW (000) | B | 130.1/122.6 |
| R1419 | 7030003860 | S.RES ERJ3GE JPW V | B | 129.5/114.9 |
| R1501 | 7030010980 | S.RES ERA3YHD 470V (47) | T | 126.5/125.3 |
| R1502 | 7030009841 | S.RES ERA3YHD 330V (33) | T | 133.1/131.1 |
| R1503 | 7030009851 | S.RES ERA3YED 271V (270) | T | 130.0/146.3 |
| R1504 | 7030011050 | S.RES ERA3YHD 100V (10) | T | 131.3/143.5 |
| R1505 | 7030006091 | S.RES ERA3YED 822V (8.2K) | B | 137.7/140.3 |
| R1506 | 7030007230 | S.RES ERA3YED 102V (1K) | B | 137.7/147.0 |
| R1507 | 7030007230 | S.RES ERA3YED 102V (1K) | T | 132.6/146.3 |
| R1508 | 7030007230 | S.RES ERA3YED 102V (1K) | T | 133.9/146.3 |
| R1509 | 7030007230 | S.RES ERA3YED 102V (1K) | T | 139.1/158.9 |
| R1510 | 7030005321 | S.RES ERA3YED 103V (10K) | T | 139.1/157.6 |
| R1511 | 7030009861 | S.RES ERA3YED 471V (470) | T | 136.5/157.6 |
| R1512 | 7030003380 | S.RES ERJ3GEYJ 331 V (330) | T | 129.6/151.6 |
| R1513 | 7030003380 | S.RES ERJ3GEYJ 331 V (330) | T | 129.6/155.5 |
| R1514 | 7030005321 | S.RES ERA3YED 103V (10K) | T | 129.6/160.8 |
| R1515 | 7030005321 | S.RES ERA3YED 103V (10K) | T | 133.5/160.8 |
| R1516 | 7310005380 | S.TRI EVM3VB13 1K (1K) | T | 119.2/157.7 |
| R1517 | 7030005321 | S.RES ERA3YED 103V (10K) | T | 115.3/158.0 |
| R1518 | 7030005321 | S.RES ERA3YED 103V (10K) | T | 134.8/160.8 |
| R1519 | 7030005321 | S.RES ERA3YED 103V (10K) | T | 131.7/171.7 |
| R1520 | 7030005321 | S.RES ERA3YED 103V (10K) | T | 136.1/160.8 |
| R1521 | 7030010980 | S.RES ERA3YHD 470V (47) | T | 126.6/133.0 |
| R1522 | 7030009841 | S.RES ERA3YHD 330V (33) | T | 126.1/141.2 |
| R1523 | 7030009851 | S.RES ERA3YED 271V (270) | T | 123.7/146.3 |
| R1524 | 7030011050 | S.RES ERA3YHD 100V (10) | T | 122.4/143.5 |
| R1525 | 7030007230 | S.RES ERA3YED 102V (1K) | B | 128.8/147.0 |
| R1526 | 7030003460 | S.RES ERJ3GEYJ 152 V (1.5K) | B | 137.7/142.1 |
| R1527 | 7030007230 | S.RES ERA3YED 102V (1K) | T | 119.8/146.3 |

Eqv.= This component is equivalent to the REF No. component listed above, and may be substituted on parts orders and repairs.

M.=Mounted side (T: Mounted on the Top side, B: Mounted on the Bottom side)
S.=Surface mount

## [RXPLL-B UNIT]

| REF NO. | PARTS NO. | DESCRIPTION | M. | H/V LOCATION |
|---|---|---|---|---|
| R1528 | 7030007230 | S.RES ERA3YED 102V (1K) | T | 121.1/146.3 |
| R1529 | 7030007230 | S.RES ERA3YED 102V (1K) | T | 115.3/152.3 |
| R1530 | 7030003380 | S.RES ERJ3GEYJ 331 V (330) | T | 128.0/151.6 |
| R1531 | 7030003380 | S.RES ERJ3GEYJ 331 V (330) | T | 128.0/155.5 |
| R1532 | 7030005321 | S.RES ERA3YED 103V (10K) | T | 124.1/160.8 |
| R1533 | 7030005321 | S.RES ERA3YED 103V (10K) | T | 128.0/160.8 |
| R1534 | 7030005321 | S.RES ERA3YED 103V (10K) | T | 122.8/160.8 |
| R1535 | 7030005321 | S.RES ERA3YED 103V (10K) | T | 121.5/160.8 |
| R1536 | 7030005321 | S.RES ERA3YED 103V (10K) | T | 129.0/171.7 |
| R1537 | 7030003320 | S.RES ERJ3GEYJ 101 V (100) | T | 115.5/164.5 |
| R1538 | 7030003320 | S.RES ERJ3GEYJ 101 V (100) | T | 107.1/170.1 |
| R1539 | 7030008061 | S.RES ERA3YED 222V (2.2K) | B | 131.8/176.4 |
| R1540 | 7030010390 | S.RES ERA3YED 821V (820) | B | 128.7/177.1 |
| R1541 | 7030003320 | S.RES ERJ3GEYJ 101 V (100) | T | 107.1/178.8 |
| R1542 | 7030003320 | S.RES ERJ3GEYJ 101 V (100) | T | 115.5/173.2 |
| R1543 | 7030009691 | S.RES ERA3YED 101V (100) | B | 130.6/179.0 |
| R1651 | 7030003380 | S.RES ERJ3GEYJ 331 V (330) | B | 101.0/144.8 |
| R1652 | 7030003220 | S.RES ERJ3GEYJ 150 V (15) | B | 102.7/144.8 |
| R1653 | 7030003380 | S.RES ERJ3GEYJ 331 V (330) | B | 102.0/143.0 |
| R1654 | 7030010980 | S.RES ERA3YHD 470V (47) | B | 105.5/142.3 |
| R1655 | 7030009861 | S.RES ERA3YED 471V (470) | B | 108.9/140.1 |
| R1656 | 7030003630 | S.RES ERJ3GEYJ 393 V (39K) | B | 108.3/142.3 |
| R1657 | 7030005871 | S.RES ERA3YKD 104V (100K) | T | 108.0/133.2 |
| R1658 | 7030003320 | S.RES ERJ3GEYJ 101 V (100) | T | 110.6/133.2 |
| R1659 | 7030009691 | S.RES ERA3YED 101V (100) | T | 115.9/125.0 |
| R1660 | 7030009691 | S.RES ERA3YED 101V (100) | T | 115.9/128.8 |
| R1661 | 7030005321 | S.RES ERA3YED 103V (10K) | T | 135.1/175.4 |
| R1662 | 7030005321 | S.RES ERA3YED 103V (10K) | T | 135.2/172.8 |
| R1663 | 7030005321 | S.RES ERA3YED 103V (10K) | T | 144.3/175.4 |
| R1664 | 7030005321 | S.RES ERA3YED 103V (10K) | T | 139.9/172.1 |
| R1665 | 7030003320 | S.RES ERJ3GEYJ 101 V (100) | T | 109.3/133.2 |
| R1667 | 7030003360 | S.RES ERJ3GEYJ 221 V (220) | T | 139.2/170.2 |
| R1668 | 7030003360 | S.RES ERJ3GEYJ 221 V (220) | T | 141.8/170.2 |
| R1670 | 7030003800 | S.RES ERJ3GEYJ 105 V (1M) | T | 140.2/164.1 |
| R1673 | 7030007230 | S.RES ERA3YED 102V (1K) | B | 146.0/174.5 |
| R1674 | 7030009851 | S.RES ERA3YED 271V (270) | B | 145.1/177.1 |
| R1675 | 7030009591 | S.RES ERA3YED 472V (4.7K) | T | 136.6/170.2 |
| R1677 | 7030009591 | S.RES ERA3YED 472V (4.7K) | T | 143.1/170.2 |
| R1701 | 7030003360 | S.RES ERJ3GEYJ 221 V (220) | T | 162.4/147.4 |
| R1703 | 7030003360 | S.RES ERJ3GEYJ 221 V (220) | T | 159.8/147.4 |
| R1704 | 7030003360 | S.RES ERJ3GEYJ 221 V (220) | T | 158.5/147.4 |
| R1706 | 7030003360 | S.RES ERJ3GEYJ 221 V (220) | T | 155.9/147.4 |
| R1707 | 7030003360 | S.RES ERJ3GEYJ 221 V (220) | T | 154.6/147.4 |
| R1708 | 7030003360 | S.RES ERJ3GEYJ 221 V (220) | T | 153.3/147.4 |
| R1709 | 7030003480 | S.RES ERJ3GEYJ 222 V (2.2K) | T | 149.7/159.3 |
| R1710 | 7030003480 | S.RES ERJ3GEYJ 222 V (2.2K) | T | 148.4/159.3 |
| R1711 | 7030003540 | S.RES ERJ3GEYJ 682 V (6.8K) | T | 147.1/159.3 |
| R1712 | 7030003540 | S.RES ERJ3GEYJ 682 V (6.8K) | T | 145.8/159.3 |
| R1713 | 7030003660 | S.RES ERJ3GEYJ 683 V (68K) | T | 145.8/157.2 |
| R1714 | 7030003660 | S.RES ERJ3GEYJ 683 V (68K) | T | 145.8/155.9 |
| R1715 | 7030003540 | S.RES ERJ3GEYJ 682 V (6.8K) | T | 143.9/164.9 |
| R1716 | 7030007230 | S.RES ERA3YED 102V (1K) | T | 164.2/164.8 |
| R1717 | 7030007230 | S.RES ERA3YED 102V (1K) | T | 164.2/163.5 |
| R1718 | 7030007230 | S.RES ERA3YED 102V (1K) | T | 164.2/162.2 |
| R1719 | 7030003660 | S.RES ERJ3GEYJ 683 V (68K) | T | 144.4/166.8 |
| | | | | |
| C1 | 4030011600 | S.CER C1608 JB 1E 104K-T | T | 10.8/18.2 |
| C2 | 4030006880 | S.CER C1608 JB 1H 472K-T | T | 25.7/29.5 |
| C14 | 4030006880 | S.CER C1608 JB 1H 472K-T | T | 37.7/12.5 |
| C15 | 4030006880 | S.CER C1608 JB 1H 472K-T | T | 31.2/15.4 |
| C16 | 4030006880 | S.CER C1608 JB 1H 472K-T | T | 35.1/15.4 |
| C17 | 4030006880 | S.CER C1608 JB 1H 472K-T | T | 13.8/12.6 |
| C18 | 4030006880 | S.CER C1608 JB 1H 472K-T | T | 16.8/12.6 |
| C19 | 4030006880 | S.CER C1608 JB 1H 472K-T | T | 29.5/12.6 |
| C20 | 4030006880 | S.CER C1608 JB 1H 472K-T | T | 87.4/127.9 |
| C21 | 4030006880 | S.CER C1608 JB 1H 472K-T | T | 88.7/127.9 |
| C22 | 4030006880 | S.CER C1608 JB 1H 472K-T | T | 90.0/127.9 |
| C30 | 4030011600 | S.CER C1608 JB 1E 104K-T | T | 19.1/112.4 |
| C31 | 4030011600 | S.CER C1608 JB 1E 104K-T | T | 20.4/113.7 |
| C32 | 4030011600 | S.CER C1608 JB 1E 104K-T | T | 24.3/111.1 |
| C51 | 4510008520 | S.ELE EEE1CA470SP | T | 84.0/20.3 |
| C52 | 4030011600 | S.CER C1608 JB 1E 104K-T | T | 78.9/23.7 |
| C53 | 4030011600 | S.CER C1608 JB 1E 104K-T | T | 75.1/23.7 |
| C54 | 4510008500 | S.ELE EEE1CA101WP | T | 70.0/20.3 |
| C61 | 4510008520 | S.ELE EEE1CA470SP | T | 62.9/20.3 |
| C62 | 4030011600 | S.CER C1608 JB 1E 104K-T | B | 58.2/19.9 |
| C63 | 4030011600 | S.CER C1608 JB 1E 104K-T | B | 54.8/19.9 |
| C64 | 4510008500 | S.ELE EEE1CA101WP | T | 50.1/20.3 |
| C101 | 4030006880 | S.CER C1608 JB 1H 472K-T | T | 39.7/80.7 |
| C102 | 4030011600 | S.CER C1608 JB 1E 104K-T | T | 41.8/79.9 |
| C103 | 4510008540 | S.ELE EEE1CA100SR | T | 40.2/76.8 |
| C104 | 4030011600 | S.CER C1608 JB 1E 104K-T | T | 21.4/100.2 |
| C105 | 4030011600 | S.CER C1608 JB 1E 104K-T | T | 21.4/88.2 |
| C106 | 4030011600 | S.CER C1608 JB 1E 104K-T | T | 21.4/84.4 |
| C107 | 4030011600 | S.CER C1608 JB 1E 104K-T | T | 24.4/79.8 |
| C108 | 4030011600 | S.CER C1608 JB 1E 104K-T | T | 27.0/79.8 |
| C109 | 4030011600 | S.CER C1608 JB 1E 104K-T | T | 30.8/79.8 |
| C110 | 4030011600 | S.CER C1608 JB 1E 104K-T | T | 36.8/79.8 |
| C111 | 4030011600 | S.CER C1608 JB 1E 104K-T | T | 41.2/88.5 |
| C112 | 4030011600 | S.CER C1608 JB 1E 104K-T | T | 41.3/82.6 |
| C114 | 4030011600 | S.CER C1608 JB 1E 104K-T | T | 39.6/98.5 |
| C115 | 4030011600 | S.CER C1608 JB 1E 104K-T | T | 38.2/98.5 |
| C116 | 4030011600 | S.CER C1608 JB 1E 104K-T | T | 35.3/99.7 |
| C117 | 4030011600 | S.CER C1608 JB 1E 104K-T | T | 23.3/98.8 |
| C118 | 4030011600 | S.CER C1608 JB 1E 104K-T | T | 42.6/82.6 |
| C120 | 4030006880 | S.CER C1608 JB 1H 472K-T | T | 36.8/101.5 |
| C121 | 4030011600 | S.CER C1608 JB 1E 104K-T | T | 39.6/101.5 |
| C125 | 4030011600 | S.CER C1608 JB 1E 104K-T | T | 14.6/83.1 |
| C129 | 4030011600 | S.CER C1608 JB 1E 104K-T | T | 33.4/79.8 |
| C130 | 4030017810 | S.CER C1608 CH 1H 102J-T | B | 47.6/106.6 |
| C131 | 4030011600 | S.CER C1608 JB 1E 104K-T | T | 30.4/73.2 |
| C132 | 4030011600 | S.CER C1608 JB 1E 104K-T | T | 35.5/73.2 |
| C133 | 4030006880 | S.CER C1608 JB 1H 472K-T | B | 43.5/98.6 |
| C134 | 4030006880 | S.CER C1608 JB 1H 472K-T | B | 43.5/96.8 |

## [RXPLL-B UNIT]

| REF NO. | PARTS NO. | DESCRIPTION | M. | H/V LOCATION |
|---|---|---|---|---|
| C135 | 4030006880 | S.CER C1608 JB 1H 472K-T | T | 46.1/95.5 |
| C136 | 4030006880 | S.CER C1608 JB 1H 472K-T | T | 46.1/94.2 |
| C137 | 4030006880 | S.CER C1608 JB 1H 472K-T | T | 46.1/90.3 |
| C138 | 4030006880 | S.CER C1608 JB 1H 472K-T | T | 46.2/87.7 |
| C139 | 4030006880 | S.CER C1608 JB 1H 472K-T | B | 43.5/100.4 |
| C141 | 4030004740 | S.CER C2012 JB 1H 472K-T | B | 34.4/85.2 |
| C142 | 4550007470 | S.TAN F931A107MNMBMA | B | 19.5/87.5 |
| C150 | 4340000050 | S.MYL ECH-U 1C472JB5 | T | 16.4/64.6 |
| C151 | 4550007520 | S.TAN F931A106MAABMA | B | 38.6/92.1 |
| C152 | 4030007070 | S.CER C1608 CH 1H 330J-T | T | 19.2/59.9 |
| C153 | 4030009910 | S.CER C1608 CH 1H 040B-T | T | 21.3/55.4 |
| C154 | 4610001850 | S.TRI TZB4R200AB10R00 (TZBX4R200BA110) | T | 17.6/55.1 |
| C155 | 4030016550 | S.CER CM105 CH 151G 50AT | T | 24.1/55.4 |
| C156 | 4030016550 | S.CER CM105 CH 151G 50AT | T | 26.9/55.4 |
| C157 | 4030016550 | S.CER CM105 CH 151G 50AT | T | 26.9/56.7 |
| C158 | 4030006880 | S.CER C1608 JB 1H 472K-T | T | 23.3/53.1 |
| C159 | 4030006880 | S.CER C1608 JB 1H 472K-T | B | 23.0/51.9 |
| C161 | 4510008540 | S.ELE EEE1CA100SR | T | 31.3/61.0 |
| C162 | 4030009920 | S.CER C1608 CH 1H 050B-T | B | 33.6/53.0 |
| C163 | 4030011600 | S.CER C1608 JB 1E 104K-T | B | 36.9/59.6 |
| C164 | 4030006880 | S.CER C1608 JB 1H 472K-T | B | 30.3/54.8 |
| C165 | 4030006880 | S.CER C1608 JB 1H 472K-T | B | 30.8/74.0 |
| C166 | 4030011600 | S.CER C1608 JB 1E 104K-T | B | 34.9/78.3 |
| C167 | 4030006880 | S.CER C1608 JB 1H 472K-T | B | 37.4/74.0 |
| C201 | 4030011340 | S.CER C1608 CH 1H 471J-T | T | 33.8/40.5 |
| C202 | 4510009280 | S.ELE EEE1EA4R7SR | T | 26.5/44.0 |
| C203 | 4030006900 | S.CER C1608 JB 1H 103K-T | T | 32.5/38.3 |
| C204 | 4030006880 | S.CER C1608 JB 1H 472K-T | T | 25.4/35.3 |
| C205 | 4030006880 | S.CER C1608 JB 1H 472K-T | T | 25.4/34.0 |
| C206 | 4030006880 | S.CER C1608 JB 1H 472K-T | T | 31.1/43.0 |
| C207 | 4030007030 | S.CER C1608 CH 1H 150J-T | B | 46.8/32.4 |
| C208 | 4030007030 | S.CER C1608 CH 1H 150J-T | T | 32.5/41.0 |
| C209 | 4030011340 | S.CER C1608 CH 1H 471J-T | T | 44.1/26.1 |
| C210 | 4550008150 | S.TAN F921V224MAA | T | 46.2/26.7 |
| Eqv. | 4550000550 | S.TAN TEESVA 1V 224M8R | | |
| C211 | 4550007300 | S.TAN F931A335MAABMA | B | 46.1/41.6 |
| C219 | 4030006880 | S.CER C1608 JB 1H 472K-T | T | 33.8/37.8 |
| C220 | 4030007130 | S.CER C1608 CH 1H 101J-T | T | 54.7/37.6 |
| C221 | 4030009910 | S.CER C1608 CH 1H 040B-T | T | 54.7/32.0 |
| C222 | 4610001860 | S.TRI TZB4Z060AB10R00 (TZBX4Z060BA110) | T | 68.1/32.6 |
| C223 | 4030007080 | S.CER C1608 CH 1H 390J-T | T | 73.2/36.3 |
| C224 | 4030007010 | S.CER C1608 CH 1H 100D-T | T | 73.2/38.9 |
| C225 | 4030007050 | S.CER C1608 CH 1H 220J-T | T | 73.6/30.9 |
| C226 | 4030006880 | S.CER C1608 JB 1H 472K-T | T | 71.0/30.9 |
| C227 | 4030009920 | S.CER C1608 CH 1H 050B-T | T | 75.1/32.6 |
| C228 | 4510008540 | S.ELE EEE1CA100SR | T | 68.8/37.8 |
| C229 | 4030009530 | S.CER C1608 CH 1H 030B-T | T | 77.8/32.6 |
| C230 | 4030007100 | S.CER C1608 CH 1H 560J-T | T | 54.7/50.0 |
| C231 | 4030009520 | S.CER C1608 CH 1H 020B-T | T | 54.7/44.6 |
| C232 | 4610001860 | S.TRI TZB4Z060AB10R00 (TZBX4Z060BA110) | T | 68.1/45.1 |
| C233 | 4030007070 | S.CER C1608 CH 1H 330J-T | T | 73.2/48.8 |
| C234 | 4030009920 | S.CER C1608 CH 1H 050B-T | T | 73.2/51.4 |
| C235 | 4030007020 | S.CER C1608 CH 1H 120J-T | T | 73.6/43.3 |
| C236 | 4030006880 | S.CER C1608 JB 1H 472K-T | T | 71.0/43.3 |
| C237 | 4030009910 | S.CER C1608 CH 1H 040B-T | T | 75.1/45.0 |
| C238 | 4510008540 | S.ELE EEE1CA100SR | T | 68.8/50.3 |
| C239 | 4030009910 | S.CER C1608 CH 1H 040B-T | T | 77.8/45.0 |
| C240 | 4030007080 | S.CER C1608 CH 1H 390J-T | T | 54.7/62.5 |
| C241 | 4030009510 | S.CER C1608 CH 1H 010B-T | T | 54.7/57.1 |
| C242 | 4610001860 | S.TRI TZB4Z060AB10R00 (TZBX4Z060BA110) | T | 68.1/57.6 |
| C243 | 4030007060 | S.CER C1608 CH 1H 270J-T | T | 73.2/61.3 |
| C244 | 4030009910 | S.CER C1608 CH 1H 040B-T | T | 73.2/63.9 |
| C245 | 4030009920 | S.CER C1608 CH 1H 050B-T | T | 73.6/55.8 |
| C246 | 4030006880 | S.CER C1608 JB 1H 472K-T | T | 71.0/55.9 |
| C247 | 4030009530 | S.CER C1608 CH 1H 030B-T | T | 75.1/57.5 |
| C248 | 4510008540 | S.ELE EEE1CA100SR | T | 68.8/62.9 |
| C250 | 4030007100 | S.CER C1608 CH 1H 560J-T | T | 54.7/75.0 |
| C251 | 4030009540 | S.CER C1608 CH 1H 1R5B-T | T | 54.7/69.6 |
| C252 | 4610001810 | S.TRI TZB4Z030AB10R00 (TZBX4Z030BA110) | T | 68.1/70.1 |
| C253 | 4030007080 | S.CER C1608 CH 1H 390J-T | T | 73.2/73.8 |
| C254 | 4030009530 | S.CER C1608 CH 1H 030B-T | T | 73.2/76.4 |
| C255 | 4030006990 | S.CER C1608 CH 1H 080D-T | T | 73.6/68.4 |
| C256 | 4030006880 | S.CER C1608 JB 1H 472K-T | T | 71.0/68.4 |
| C257 | 4030007010 | S.CER C1608 CH 1H 100D-T | T | 75.1/70.0 |
| C258 | 4510008540 | S.ELE EEE1CA100SR | T | 68.8/75.4 |
| C260 | 4030007110 | S.CER C1608 CH 1H 680J-T | T | 54.7/87.5 |
| C262 | 4610001810 | S.TRI TZB4Z030AB10R00 (TZBX4Z030BA110) | T | 68.1/82.6 |
| C263 | 4030007080 | S.CER C1608 CH 1H 390J-T | T | 73.2/86.3 |
| C264 | 4030009530 | S.CER C1608 CH 1H 030B-T | T | 73.2/88.9 |
| C265 | 4030011770 | S.CER C1608 CH 1H 060B-T | T | 73.6/80.9 |
| C266 | 4030006880 | S.CER C1608 JB 1H 472K-T | T | 71.0/80.9 |
| C267 | 4030007010 | S.CER C1608 CH 1H 100D-T | T | 75.1/82.5 |
| C268 | 4510008540 | S.ELE EEE1CA100SR | T | 68.8/87.9 |
| C272 | 4610001860 | S.TRI TZB4Z060AB10R00 (TZBX4Z060BA110) | T | 68.1/95.1 |
| C273 | 4030007050 | S.CER C1608 CH 1H 220J-T | T | 73.2/98.2 |
| C274 | 4030009530 | S.CER C1608 CH 1H 030B-T | T | 73.2/100.8 |
| C275 | 4030009920 | S.CER C1608 CH 1H 050B-T | T | 73.6/92.8 |
| C276 | 4030006880 | S.CER C1608 JB 1H 472K-T | T | 71.0/92.8 |
| C277 | 4030007010 | S.CER C1608 CH 1H 100D-T | T | 75.1/95.0 |
| C278 | 4510008540 | S.ELE EEE1CA100SR | T | 68.8/100.4 |
| C283 | 4030017810 | S.CER C1608 CH 1H 102J-T | T | 82.1/36.3 |
| C284 | 4030006880 | S.CER C1608 JB 1H 472K-T | T | 84.5/34.3 |
| C285 | 4030017810 | S.CER C1608 CH 1H 102J-T | T | 82.1/48.8 |
| C286 | 4030006880 | S.CER C1608 JB 1H 472K-T | T | 84.5/46.9 |
| C287 | 4030017810 | S.CER C1608 CH 1H 102J-T | T | 82.1/61.3 |
| C288 | 4030006880 | S.CER C1608 JB 1H 472K-T | T | 83.9/57.5 |
| C289 | 4030017810 | S.CER C1608 CH 1H 102J-T | T | 82.1/73.8 |
| C290 | 4030006880 | S.CER C1608 JB 1H 472K-T | T | 84.3/70.5 |

Eqv.= This component is equivalent to the REF No. component listed above, and may be substituted on parts orders and repairs.

M.=Mounted side (T: Mounted on the Top side, B: Mounted on the Bottom side)
S.=Surface mount

## [RXPLL-B UNIT]

| REF NO. | PARTS NO. | DESCRIPTION | M. | H/V LOCATION |
|---|---|---|---|---|
| C291 | 4030017810 | S.CER C1608 CH 1H 102J-T | T | 82.1/86.3 |
| C292 | 4030006880 | S.CER C1608 JB 1H 472K-T | T | 84.5/84.4 |
| C293 | 4030017810 | S.CER C1608 CH 1H 102J-T | T | 82.2/98.8 |
| C294 | 4030006880 | S.CER C1608 JB 1H 472K-T | T | 83.2/94.0 |
| C297 | 4030009920 | S.CER C1608 CH 1H 050B-T | T | 52.7/59.4 |
| C299 | 4030007050 | S.CER C1608 CH 1H 220J-T | T | 52.7/84.4 |
| C301 | 4030006880 | S.CER C1608 JB 1H 472K-T | T | 89.3/30.6 |
| C302 | 4030006880 | S.CER C1608 JB 1H 472K-T | T | 94.9/28.0 |
| C303 | 4030006880 | S.CER C1608 JB 1H 472K-T | B | 92.6/39.8 |
| C304 | 4030006880 | S.CER C1608 JB 1H 472K-T | B | 92.6/45.2 |
| C305 | 4030006880 | S.CER C1608 JB 1H 472K-T | B | 89.1/48.8 |
| C306 | 4030006880 | S.CER C1608 JB 1H 472K-T | B | 89.1/50.6 |
| C309 | 4030017810 | S.CER C1608 CH 1H 102J-T | T | 94.9/42.7 |
| C310 | 4030011600 | S.CER C1608 JB 1E 104K-T | T | 92.9/42.2 |
| C311 | 4510008520 | S.ELE EEE1CA470SP | T | 93.4/47.4 |
| C312 | 4030006880 | S.CER C1608 JB 1H 472K-T | B | 89.0/27.4 |
| C313 | 4030006880 | S.CER C1608 JB 1H 472K-T | B | 93.8/23.1 |
| C331 | 4030007110 | S.CER C1608 CH 1H 680J-T | T | 89.3/32.2 |
| C332 | 4030007160 | S.CER C1608 CH 1H 181J-T | T | 92.1/33.5 |
| C333 | 4030007110 | S.CER C1608 CH 1H 680J-T | T | 89.3/33.5 |
| C334 | 4030007050 | S.CER C1608 CH 1H 220J-T | T | 94.9/36.0 |
| C335 | 4030006980 | S.CER C1608 CH 1H 070D-T | T | 94.9/37.4 |
| C336 | 4030007030 | S.CER C1608 CH 1H 150J-T | T | 92.1/38.8 |
| C337 | 4030007050 | S.CER C1608 CH 1H 220J-T | T | 94.9/38.8 |
| C341 | 4030006880 | S.CER C1608 JB 1H 472K-T | T | 94.9/40.1 |
| C342 | 4030006880 | S.CER C1608 JB 1H 472K-T | T | 86.5/33.5 |
| C344 | 4030011600 | S.CER C1608 JB 1E 104K-T | T | 94.9/41.4 |
| C351 | 4030017810 | S.CER C1608 CH 1H 102J-T | T | 94.9/61.6 |
| C352 | 4030011600 | S.CER C1608 JB 1E 104K-T | T | 94.9/62.9 |
| C353 | 4510008520 | S.ELE EEE1CA470SP | T | 93.4/67.1 |
| C354 | 4030006880 | S.CER C1608 JB 1H 472K-T | T | 89.3/51.7 |
| C355 | 4030006880 | S.CER C1608 JB 1H 472K-T | T | 94.9/55.1 |
| C356 | 4030006880 | S.CER C1608 JB 1H 472K-T | T | 89.3/58.4 |
| C357 | 4030006880 | S.CER C1608 JB 1H 472K-T | T | 94.9/57.7 |
| C358 | 4030006880 | S.CER C1608 JB 1H 472K-T | B | 89.2/60.3 |
| C359 | 4030006880 | S.CER C1608 JB 1H 472K-T | B | 92.6/62.1 |
| C360 | 4030006880 | S.CER C1608 JB 1H 472K-T | B | 89.9/66.9 |
| C361 | 4030006880 | S.CER C1608 JB 1H 472K-T | T | 89.4/83.5 |
| C363 | 4030006880 | S.CER C1608 JB 1H 472K-T | T | 86.1/60.9 |
| C364 | 4030017810 | S.CER C1608 CH 1H 102J-T | T | 86.7/52.3 |
| C365 | 4030006880 | S.CER C1608 JB 1H 472K-T | T | 90.3/59.9 |
| C421 | 4030006880 | S.CER C1608 JB 1H 472K-T | T | 94.1/88.5 |
| C423 | 4030006880 | S.CER C1608 JB 1H 472K-T | T | 94.1/93.3 |
| C426 | 4030006880 | S.CER C1608 JB 1H 472K-T | B | 94.6/87.3 |
| C427 | 4030006880 | S.CER C1608 JB 1H 472K-T | T | 92.1/86.6 |
| C441 | 4030007040 | S.CER C1608 CH 1H 180J-T | T | 94.9/71.3 |
| C442 | 4030007040 | S.CER C1608 CH 1H 180J-T | T | 94.9/72.6 |
| C443 | 4030007020 | S.CER C1608 CH 1H 120J-T | T | 92.1/74.3 |
| C444 | 4030007080 | S.CER C1608 CH 1H 390J-T | T | 94.9/73.9 |
| C445 | 4030011770 | S.CER C1608 CH 1H 060B-T | T | 94.9/75.2 |
| C446 | 4030007060 | S.CER C1608 CH 1H 270J-T | T | 94.9/79.1 |
| C447 | 4030007110 | S.CER C1608 CH 1H 680J-T | T | 92.8/79.0 |
| C448 | 4030006880 | S.CER C1608 JB 1H 472K-T | T | 94.9/76.5 |
| C449 | 4030006880 | S.CER C1608 JB 1H 472K-T | T | 88.2/69.1 |
| C451 | 4030007110 | S.CER C1608 CH 1H 680J-T | T | 92.0/82.2 |
| C452 | 4030007160 | S.CER C1608 CH 1H 181J-T | T | 92.0/80.9 |
| C453 | 4030011600 | S.CER C1608 JB 1E 104K-T | T | 94.9/77.8 |
| C501 | 4030006880 | S.CER C1608 JB 1H 472K-T | T | 38.9/131.2 |
| C502 | 4030011600 | S.CER C1608 JB 1E 104K-T | T | 38.9/129.9 |
| C503 | 4510008540 | S.ELE EEE1CA100SR | T | 36.6/126.7 |
| C504 | 4030011600 | S.CER C1608 JB 1E 104K-T | T | 21.4/153.1 |
| C505 | 4550007470 | S.TAN F931A107MNMBMA | B | 19.2/140.3 |
| C506 | 4030011600 | S.CER C1608 JB 1E 104K-T | T | 21.4/141.0 |
| C507 | 4030011600 | S.CER C1608 JB 1E 104K-T | T | 21.4/137.1 |
| C509 | 4030011600 | S.CER C1608 JB 1E 104K-T | T | 25.8/132.6 |
| C510 | 4030011600 | S.CER C1608 JB 1E 104K-T | T | 28.4/132.6 |
| C511 | 4030011600 | S.CER C1608 JB 1E 104K-T | T | 32.2/132.6 |
| C512 | 4030011600 | S.CER C1608 JB 1E 104K-T | T | 34.8/132.6 |
| C513 | 4030011600 | S.CER C1608 JB 1E 104K-T | T | 37.4/132.6 |
| C514 | 4030011600 | S.CER C1608 JB 1E 104K-T | T | 41.2/136.1 |
| C515 | 4030011600 | S.CER C1608 JB 1E 104K-T | T | 41.3/139.7 |
| C516 | 4030011600 | S.CER C1608 JB 1E 104K-T | T | 41.3/142.3 |
| C517 | 4030011600 | S.CER C1608 JB 1E 104K-T | T | 37.6/151.8 |
| C518 | 4030011600 | S.CER C1608 JB 1E 104K-T | T | 34.8/151.8 |
| C519 | 4030011600 | S.CER C1608 JB 1E 104K-T | T | 31.2/151.8 |
| C520 | 4030011600 | S.CER C1608 JB 1E 104K-T | T | 23.3/151.9 |
| C521 | 4030011600 | S.CER C1608 JB 1E 104K-T | T | 41.6/134.0 |
| C522 | 4550007220 | S.TAN F931A476MCMBMA | B | 40.7/145.0 |
| C525 | 4030006880 | S.CER C1608 JB 1H 472K-T | T | 35.4/154.5 |
| C526 | 4030011600 | S.CER C1608 JB 1E 104K-T | T | 36.7/154.5 |
| C531 | 4030006880 | S.CER C1608 JB 1H 472K-T | T | 14.6/137.5 |
| C532 | 4030007070 | S.CER C1608 CH 1H 330J-T | T | 17.2/137.5 |
| C533 | 4030007110 | S.CER C1608 CH 1H 680J-T | T | 17.3/133.4 |
| C534 | 4030007110 | S.CER C1608 CH 1H 680J-T | T | 16.8/130.1 |
| C535 | 4030007070 | S.CER C1608 CH 1H 330J-T | T | 18.1/127.0 |
| C536 | 4030006880 | S.CER C1608 JB 1H 472K-T | T | 20.9/127.6 |
| C537 | 4030006880 | S.CER C1608 JB 1H 472K-T | T | 27.2/126.4 |
| C540 | 4030006880 | S.CER C1608 JB 1H 472K-T | B | 56.3/142.8 |
| C541 | 4510008540 | S.ELE EEE1CA100SR | T | 51.0/139.3 |
| C542 | 4340000260 | S.MYL ECPU1C104MA5 | B | 47.8/128.7 |
| C543 | 4030007060 | S.CER C1608 CH 1H 270J-T | T | 62.2/136.4 |
| C545 | 4030007060 | S.CER C1608 CH 1H 270J-T | T | 70.0/137.1 |
| C546 | 4610001830 | S.TRI TZB4S100AB10R00 (TZBX4N100BA110) | T | 65.8/138.7 |
| C547 | 4030007130 | S.CER C1608 CH 1H 101J-T | T | 71.3/137.1 |
| C548 | 4030007010 | S.CER C1608 CH 1H 100D-T | T | 71.3/139.9 |
| C549 | 4030007050 | S.CER C1608 CH 1H 220J-T | T | 68.9/145.1 |
| C550 | 4030006880 | S.CER C1608 JB 1H 472K-T | T | 66.3/143.0 |
| C551 | 4030009520 | S.CER C1608 CH 1H 020B-T | T | 71.3/142.8 |
| C552 | 4030017810 | S.CER C1608 CH 1H 102J-T | B | 54.6/139.5 |
| C553 | 4030006880 | S.CER C1608 JB 1H 472K-T | B | 56.3/139.5 |
| C554 | 4510008500 | S.ELE EEE1CA101WP | T | 50.9/146.6 |
| C555 | 4030006880 | S.CER C1608 JB 1H 472K-T | B | 47.8/149.6 |
| C556 | 4550007220 | S.TAN F931A476MCMBMA | B | 76.4/136.1 |
| C558 | 4550007520 | S.TAN F931A106MAABMA | B | 43.4/132.5 |

## [RXPLL-B UNIT]

| REF NO. | PARTS NO. | DESCRIPTION | M. | H/V LOCATION |
|---|---|---|---|---|
| C559 | 4550007400 | S.TAN F931A225MAABMA | B | 43.4/129.9 |
| C561 | 4550007520 | S.TAN F931A106MAABMA | T | 70.1/157.6 |
| C562 | 4030006880 | S.CER C1608 JB 1H 472K-T | T | 68.3/155.5 |
| C563 | 4030017810 | S.CER C1608 CH 1H 102J-T | B | 60.1/158.1 |
| C564 | 4030006880 | S.CER C1608 JB 1H 472K-T | B | 58.8/158.1 |
| C565 | 4510008520 | S.ELE EEE1CA470SP | T | 50.9/155.6 |
| C566 | 4030006880 | S.CER C1608 JB 1H 472K-T | T | 64.4/155.5 |
| C571 | 4030006880 | S.CER C1608 JB 1H 472K-T | B | 58.5/161.3 |
| C573 | 4030007040 | S.CER C1608 CH 1H 180J-T | B | 72.5/166.8 |
| C574 | 4030009510 | S.CER C1608 CH 1H 010B-T | T | 72.6/169.1 |
| C575 | 4030007040 | S.CER C1608 CH 1H 180J-T | T | 72.6/171.9 |
| C580 | 4030006880 | S.CER C1608 JB 1H 472K-T | T | 41.9/152.4 |
| C581 | 4030006880 | S.CER C1608 JB 1H 472K-T | T | 41.9/144.2 |
| C591 | 4030006880 | S.CER C1608 JB 1H 472K-T | T | 63.5/171.2 |
| C592 | 4030007060 | S.CER C1608 CH 1H 270J-T | T | 62.8/163.1 |
| C593 | 4510008540 | S.ELE EEE1CA100SR | T | 54.4/170.7 |
| C594 | 4030006880 | S.CER C1608 JB 1H 472K-T | T | 57.5/171.9 |
| C596 | 4030006880 | S.CER C1608 JB 1H 472K-T | B | 63.7/168.1 |
| C597 | 4030007050 | S.CER C1608 CH 1H 220J-T | T | 62.2/171.2 |
| C601 | 4030006880 | S.CER C1608 JB 1H 472K-T | T | 47.3/116.4 |
| C602 | 4030006880 | S.CER C1608 JB 1H 472K-T | T | 49.5/121.4 |
| C607 | 4030006880 | S.CER C1608 JB 1H 472K-T | T | 51.2/115.4 |
| C608 | 4030006880 | S.CER C1608 JB 1H 472K-T | T | 53.2/115.9 |
| C609 | 4030007100 | S.CER C1608 CH 1H 560J-T | T | 53.2/114.6 |
| C610 | 4030008750 | S.CER C1608 CH 1H 360J-T | T | 55.2/115.4 |
| C611 | 4030007140 | S.CER C1608 CH 1H 121J-T | T | 56.3/113.5 |
| C612 | 4030007020 | S.CER C1608 CH 1H 120J-T | T | 57.1/114.8 |
| C613 | 4030007110 | S.CER C1608 CH 1H 680J-T | T | 56.3/112.2 |
| C651 | 4030006880 | S.CER C1608 JB 1H 472K-T | T | 13.5/174.0 |
| C652 | 4030011600 | S.CER C1608 JB 1E 104K-T | T | 12.8/176.3 |
| C653 | 4510008540 | S.ELE EEE1CA100SR | T | 6.8/172.6 |
| C654 | 4030011600 | S.CER C1608 JB 1E 104K-T | B | 17.4/170.5 |
| C655 | 4030011600 | S.CER C1608 JB 1E 104K-T | T | 25.9/161.4 |
| C656 | 4030011600 | S.CER C1608 JB 1E 104K-T | T | 25.8/177.1 |
| C657 | 4030011600 | S.CER C1608 JB 1E 104K-T | T | 31.7/169.3 |
| C658 | 4030011600 | S.CER C1608 JB 1E 104K-T | T | 13.5/172.7 |
| C659 | 4030011600 | S.CER C1608 JB 1E 104K-T | T | 16.5/163.4 |
| C660 | 4030006880 | S.CER C1608 JB 1H 472K-T | T | 17.6/161.4 |
| C661 | 4030011600 | S.CER C1608 JB 1E 104K-T | T | 13.3/166.1 |
| C662 | 4550007220 | S.TAN F931A476MCMBMA | B | 30.6/171.0 |
| C680 | 4030006880 | S.CER C1608 JB 1H 472K-T | T | 34.3/177.1 |
| C681 | 4030007160 | S.CER C1608 CH 1H 181J-T | T | 40.3/177.1 |
| C682 | 4030007140 | S.CER C1608 CH 1H 121J-T | T | 39.6/175.2 |
| C683 | 4030011330 | S.CER C1608 CH 1H 391J-T | T | 40.9/175.2 |
| C684 | 4030007080 | S.CER C1608 CH 1H 390J-T | B | 39.3/174.0 |
| C685 | 4030011280 | S.CER C1608 CH 1H 271J-T | B | 42.3/172.6 |
| C686 | 4030010760 | S.CER C1608 CH 1H 331J-T | B | 39.3/170.6 |
| C687 | 4030018580 | S.CER C1608 CH 1H 821J-T | T | 41.0/169.7 |
| C688 | 4030010760 | S.CER C1608 CH 1H 331J-T | B | 37.5/169.7 |
| C689 | 4030011600 | S.CER C1608 JB 1E 104K-T | T | 37.4/166.4 |
| C690 | 4030011600 | S.CER C1608 JB 1E 104K-T | T | 37.4/161.3 |
| C691 | 4030011600 | S.CER C1608 JB 1E 104K-T | T | 46.4/164.0 |
| C692 | 4030006880 | S.CER C1608 JB 1H 472K-T | T | 40.3/162.1 |
| C693 | 4030006880 | S.CER C1608 JB 1H 472K-T | B | 58.4/169.6 |
| C694 | 4030006880 | S.CER C1608 JB 1H 472K-T | B | 58.4/164.2 |
| C703 | 4030017810 | S.CER C1608 CH 1H 102J-T | T | 24.3/116.6 |
| C704 | 4030006880 | S.CER C1608 JB 1H 472K-T | T | 23.0/116.6 |
| C705 | 4510008500 | S.ELE EEE1CA101WP | T | 29.4/118.7 |
| C707 | 4030011600 | S.CER C1608 JB 1E 104K-T | T | 32.1/113.7 |
| C708 | 4030011600 | S.CER C1608 JB 1E 104K-T | T | 32.1/108.1 |
| C709 | 4030007070 | S.CER C1608 CH 1H 330J-T | T | 38.8/112.9 |
| C710 | 4030006880 | S.CER C1608 JB 1H 472K-T | T | 36.2/112.9 |
| C711 | 4030009540 | S.CER C1608 CH 1H 1R5B-T | B | 39.3/113.6 |
| C712 | 4030007070 | S.CER C1608 CH 1H 330J-T | T | 36.2/114.2 |
| C713 | 4030006880 | S.CER C1608 JB 1H 472K-T | T | 42.0/118.8 |
| C1000 | 4030007050 | S.CER C1608 CH 1H 220J-T | B | 177.2/13.9 |
| C1002 | 4030006880 | S.CER C1608 JB 1H 472K-T | B | 153.1/16.2 |
| C1003 | 4030012600 | S.CER C2012 JB 1A 105M-T | T | 157.5/8.3 |
| C1004 | 4030011600 | S.CER C1608 JB 1E 104K-T | B | 169.6/8.7 |
| C1005 | 4030011600 | S.CER C1608 JB 1E 104K-T | T | 162.9/17.3 |
| C1006 | 4030010210 | S.CER C3216 JB 1C 105M-T | T | 173.8/18.6 |
| C1007 | 4030006880 | S.CER C1608 JB 1H 472K-T | T | 172.4/23.9 |
| C1008 | 4030006880 | S.CER C1608 JB 1H 472K-T | T | 160.0/24.0 |
| C1009 | 4030006880 | S.CER C1608 JB 1H 472K-T | T | 147.6/23.8 |
| C1010 | 4030012600 | S.CER C2012 JB 1A 105M-T | T | 154.5/28.9 |
| C1011 | 4030012600 | S.CER C2012 JB 1A 105M-T | T | 144.2/29.3 |
| C1012 | 4030010210 | S.CER C3216 JB 1C 105M-T | T | 144.9/40.2 |
| C1013 | 4030012600 | S.CER C2012 JB 1A 105M-T | T | 144.2/33.2 |
| C1014 | 4030018810 | S.CER C3216 CH 1H 333J-T | B | 151.6/48.3 |
| C1015 | 4030012600 | S.CER C2012 JB 1A 105M-T | T | 163.6/13.8 |
| C1016 | 4030012600 | S.CER C2012 JB 1A 105M-T | T | 173.6/33.2 |
| C1017 | 4030012600 | S.CER C2012 JB 1A 105M-T | T | 163.3/33.2 |
| C1020 | 4030012600 | S.CER C2012 JB 1A 105M-T | B | 170.0/38.6 |
| C1021 | 4030012600 | S.CER C2012 JB 1A 105M-T | B | 154.0/38.6 |
| C1024 | 4030010210 | S.CER C3216 JB 1C 105M-T | B | 170.5/45.5 |
| C1025 | 4030010210 | S.CER C3216 JB 1C 105M-T | B | 154.7/45.5 |
| C1026 | 4030010210 | S.CER C3216 JB 1C 105M-T | T | 171.4/52.7 |
| C1027 | 4030010210 | S.CER C3216 JB 1C 105M-T | T | 165.6/52.7 |
| C1028 | 4030006880 | S.CER C1608 JB 1H 472K-T | B | 156.4/65.4 |
| C1029 | 4030006880 | S.CER C1608 JB 1H 472K-T | T | 168.5/65.4 |
| C1030 | 4030010210 | S.CER C3216 JB 1C 105M-T | T | 164.6/18.0 |
| C1031 | 4030012600 | S.CER C2012 JB 1A 105M-T | B | 169.2/10.8 |
| C1033 | 4550007500 | S.TAN F931D106MBABMA | B | 146.5/47.7 |
| Eqv. | 4550006470 | S.TAN TEESVB2 1D 106M8R | | |
| C1034 | 4550007500 | S.TAN F931D106MBABMA | B | 174.0/52.1 |
| Eqv. | 4550006470 | S.TAN TEESVB2 1D 106M8R | | |
| C1035 | 4550007500 | S.TAN F931D106MBABMA | B | 164.6/15.8 |
| Eqv. | 4550006470 | S.TAN TEESVB2 1D 106M8R | | |
| C1036 | 4030007120 | S.CER C1608 CH 1H 820J-T | T | 160.2/12.8 |
| C1037 | 4030007090 | S.CER C1608 CH 1H 470J-T | B | 149.4/49.3 |
| C1038 | 4030017810 | S.CER C1608 CH 1H 102J-T | T | 146.6/26.3 |
| C1039 | 4030017810 | S.CER C1608 CH 1H 102J-T | T | 146.6/41.0 |
| C1040 | 4030017810 | S.CER C1608 CH 1H 102J-T | T | 145.3/36.4 |
| C1041 | 4030006990 | S.CER C1608 CH 1H 080D-T | B | 153.5/31.0 |
| C1046 | 4030007010 | S.CER C1608 CH 1H 100D-T | B | 168.5/53.8 |

Eqv.= This component is equivalent to the REF No. component listed above, and may be substituted on parts orders and repairs.

M.=Mounted side (T: Mounted on the Top side, B: Mounted on the Bottom side)
S.=Surface mount

## [RXPLL-B UNIT]

| REF NO. | PARTS NO. | DESCRIPTION | M. | H/V LOCATION |
|---|---|---|---|---|
| C1048 | 4030006880 | S.CER C1608 JB 1H 472K-T | B | 170.7/41.7 |
| C1049 | 4030006880 | S.CER C1608 JB 1H 472K-T | B | 154.7/41.7 |
| C1050 | 4030017810 | S.CER C1608 CH 1H 102J-T | B | 170.5/49.5 |
| C1051 | 4030017810 | S.CER C1608 CH 1H 102J-T | B | 154.7/49.4 |
| C1052 | 4030007060 | S.CER C1608 CH 1H 270J-T | B | 164.1/29.6 |
| C1053 | 4030007110 | S.CER C1608 CH 1H 680J-T | T | 175.3/77.3 |
| C1054 | 4030007010 | S.CER C1608 CH 1H 100D-T | B | 175.8/72.4 |
| C1055 | 4030007140 | S.CER C1608 CH 1H 121J-T | B | 175.8/74.2 |
| C1056 | 4030007050 | S.CER C1608 CH 1H 220J-T | T | 175.3/76.0 |
| C1057 | 4030007130 | S.CER C1608 CH 1H 101J-T | T | 172.1/77.2 |
| C1058 | 4030009920 | S.CER C1608 CH 1H 050B-T | B | 173.3/12.7 |
| C1060 | 4030017810 | S.CER C1608 CH 1H 102J-T | T | 178.6/94.4 |
| C1061 | 4030007090 | S.CER C1608 CH 1H 470J-T | B | 147.7/91.9 |
| C1062 | 4030007170 | S.CER C1608 CH 1H 221J-T | B | 149.5/91.9 |
| C1064 | 4030007090 | S.CER C1608 CH 1H 470J-T | T | 148.8/80.2 |
| C1066 | 4030007010 | S.CER C1608 CH 1H 100D-T | T | 138.7/82.0 |
| C1067 | 4030007010 | S.CER C1608 CH 1H 100D-T | T | 173.4/77.2 |
| C1070 | 4030006980 | S.CER C1608 CH 1H 070D-T | T | 137.2/82.0 |
| C1071 | 4030007100 | S.CER C1608 CH 1H 560J-T | B | 162.2/75.4 |
| C1072 | 4030007170 | S.CER C1608 CH 1H 221J-T | B | 162.0/78.7 |
| C1073 | 4030007080 | S.CER C1608 CH 1H 390J-T | B | 164.1/76.5 |
| C1074 | 4030007060 | S.CER C1608 CH 1H 270J-T | T | 148.8/78.7 |
| C1081 | 4030006900 | S.CER C1608 JB 1H 103K-T | B | 156.1/86.0 |
| C1082 | 4030006900 | S.CER C1608 JB 1H 103K-T | B | 151.3/91.9 |
| C1083 | 4030006900 | S.CER C1608 JB 1H 103K-T | B | 151.2/81.7 |
| C1084 | 4030006880 | S.CER C1608 JB 1H 472K-T | B | 149.4/81.7 |
| C1085 | 4030006880 | S.CER C1608 JB 1H 472K-T | B | 153.0/81.7 |
| C1091 | 4030006880 | S.CER C1608 JB 1H 472K-T | T | 149.4/149.4 |
| C1092 | 4030006880 | S.CER C1608 JB 1H 472K-T | T | 147.0/138.5 |
| C1093 | 4030006880 | S.CER C1608 JB 1H 472K-T | T | 161.3/135.9 |
| C1101 | 4030006900 | S.CER C1608 JB 1H 103K-T | T | 177.0/91.0 |
| C1102 | 4030006900 | S.CER C1608 JB 1H 103K-T | T | 175.4/115.5 |
| C1103 | 4030011600 | S.CER C1608 JB 1E 104K-T | T | 179.6/116.4 |
| C1104 | 4030011600 | S.CER C1608 JB 1E 104K-T | T | 175.4/87.7 |
| C1106 | 4030011600 | S.CER C1608 JB 1E 104K-T | T | 179.3/128.8 |
| C1107 | 4030011600 | S.CER C1608 JB 1E 104K-T | B | 172.3/124.3 |
| C1109 | 4030007090 | S.CER C1608 CH 1H 470J-T | T | 175.7/137.9 |
| C1110 | 4030006900 | S.CER C1608 JB 1H 103K-T | T | 175.7/136.6 |
| C1111 | 4030011600 | S.CER C1608 JB 1E 104K-T | T | 176.7/132.0 |
| C1112 | 4030006900 | S.CER C1608 JB 1H 103K-T | T | 179.3/132.0 |
| C1113 | 4030007090 | S.CER C1608 CH 1H 470J-T | T | 178.6/140.9 |
| C1114 | 4030006900 | S.CER C1608 JB 1H 103K-T | B | 178.5/138.0 |
| C1115 | 4030011600 | S.CER C1608 JB 1E 104K-T | T | 175.7/140.1 |
| C1116 | 4030006900 | S.CER C1608 JB 1H 103K-T | T | 165.7/138.7 |
| C1117 | 4030007010 | S.CER C1608 CH 1H 100D-T | T | 169.7/142.2 |
| C1118 | 4030011600 | S.CER C1608 JB 1E 104K-T | T | 171.0/142.2 |
| C1119 | 4030006880 | S.CER C1608 JB 1H 472K-T | T | 172.0/146.6 |
| C1120 | 4030006880 | S.CER C1608 JB 1H 472K-T | T | 172.0/148.4 |
| C1121 | 4030011600 | S.CER C1608 JB 1E 104K-T | T | 180.6/147.7 |
| C1122 | 4030009530 | S.CER C1608 CH 1H 030B-T | T | 178.2/120.3 |
| C1123 | 4030006900 | S.CER C1608 JB 1H 103K-T | T | 182.1/100.9 |
| C1124 | 4030006900 | S.CER C1608 JB 1H 103K-T | T | 175.4/105.9 |
| C1125 | 4030006900 | S.CER C1608 JB 1H 103K-T | T | 175.5/85.1 |
| C1126 | 4030011600 | S.CER C1608 JB 1E 104K-T | T | 173.5/131.1 |
| C1151 | 4030007110 | S.CER C1608 CH 1H 680J-T | B | 123.2/64.1 |
| C1152 | 4030007110 | S.CER C1608 CH 1H 680J-T | B | 123.2/57.1 |
| C1153 | 4030017810 | S.CER C1608 CH 1H 102J-T | T | 131.5/64.0 |
| C1201 | 4030007110 | S.CER C1608 CH 1H 680J-T | B | 120.3/21.8 |
| C1202 | 4030007110 | S.CER C1608 CH 1H 680J-T | B | 118.5/21.8 |
| C1207 | 4030006880 | S.CER C1608 JB 1H 472K-T | B | 123.1/11.9 |
| C1226 | 4030009500 | S.CER C1608 CH 1H 0R5B-T | B | 125.0/35.7 |
| C1227 | 4030009500 | S.CER C1608 CH 1H 0R5B-T | B | 115.5/35.7 |
| C1228 | 4030009920 | S.CER C1608 CH 1H 050B-T | B | 114.0/41.9 |
| C1231 | 4030006900 | S.CER C1608 JB 1H 103K-T | T | 118.9/21.5 |
| C1232 | 4030006900 | S.CER C1608 JB 1H 103K-T | T | 109.0/21.5 |
| C1234 | 4030006900 | S.CER C1608 JB 1H 103K-T | B | 123.6/38.3 |
| C1235 | 4030006880 | S.CER C1608 JB 1H 472K-T | B | 116.6/32.2 |
| C1236 | 4030006900 | S.CER C1608 JB 1H 103K-T | T | 119.8/40.1 |
| C1238 | 4030006900 | S.CER C1608 JB 1H 103K-T | B | 114.1/38.3 |
| C1239 | 4030006880 | S.CER C1608 JB 1H 472K-T | B | 106.8/32.3 |
| C1240 | 4030006900 | S.CER C1608 JB 1H 103K-T | T | 111.7/40.5 |
| C1241 | 4030006900 | S.CER C1608 JB 1H 103K-T | T | 113.6/38.6 |
| C1243 | 4030006880 | S.CER C1608 JB 1H 472K-T | B | 129.6/46.7 |
| C1244 | 4030007080 | S.CER C1608 CH 1H 390J-T | T | 149.7/67.0 |
| C1245 | 4030007130 | S.CER C1608 CH 1H 101J-T | T | 151.0/64.4 |
| C1246 | 4030007120 | S.CER C1608 CH 1H 820J-T | T | 151.0/67.1 |
| C1247 | 4030007090 | S.CER C1608 CH 1H 470J-T | T | 153.5/63.5 |
| C1248 | 4030007130 | S.CER C1608 CH 1H 101J-T | T | 153.5/66.8 |
| C1249 | 4030007020 | S.CER C1608 CH 1H 120J-T | T | 153.2/70.3 |
| C1250 | 4030007100 | S.CER C1608 CH 1H 560J-T | B | 152.5/74.3 |
| C1251 | 4030006900 | S.CER C1608 JB 1H 103K-T | T | 160.2/92.9 |
| C1252 | 4030006900 | S.CER C1608 JB 1H 103K-T | T | 152.7/92.9 |
| C1253 | 4030006900 | S.CER C1608 JB 1H 103K-T | B | 152.5/111.3 |
| C1255 | 4030017810 | S.CER C1608 CH 1H 102J-T | B | 155.8/99.3 |
| C1256 | 4030007010 | S.CER C1608 CH 1H 100D-T | T | 156.3/98.8 |
| C1257 | 4030011600 | S.CER C1608 JB 1E 104K-T | B | 155.8/103.0 |
| C1258 | 4030007080 | S.CER C1608 CH 1H 390J-T | B | 152.1/97.5 |
| C1264 | 4030007110 | S.CER C1608 CH 1H 680J-T | T | 122.0/51.1 |
| C1265 | 4610001830 | S.TRI TZB4S100AB10R00 (TZBX4N100BA110) | T | 163.8/70.8 |
| C1266 | 4030007020 | S.CER C1608 CH 1H 120J-T | T | 160.2/74.6 |
| C1267 | 4030006880 | S.CER C1608 JB 1H 472K-T | B | 157.0/126.5 |
| C1268 | 4030006980 | S.CER C1608 CH 1H 070D-T | T | 149.7/64.4 |
| C1302 | 4030007060 | S.CER C1608 CH 1H 270J-T | T | 159.3/111.0 |
| C1303 | 4030006980 | S.CER C1608 CH 1H 070D-T | T | 159.3/112.9 |
| C1304 | 4030007070 | S.CER C1608 CH 1H 330J-T | T | 159.3/114.2 |
| C1305 | 4030007010 | S.CER C1608 CH 1H 100D-T | T | 153.5/114.6 |
| C1306 | 4030009650 | S.CER C1608 CH 1H 240J-T | T | 159.3/115.5 |
| C1307 | 4030007030 | S.CER C1608 CH 1H 150J-T | T | 153.5/120.2 |
| C1308 | 4030006900 | S.CER C1608 JB 1H 103K-T | T | 155.1/127.1 |
| C1309 | 4030007080 | S.CER C1608 CH 1H 390J-T | T | 156.5/125.8 |
| C1310 | 4030007080 | S.CER C1608 CH 1H 390J-T | T | 159.1/128.4 |
| C1311 | 4030006900 | S.CER C1608 JB 1H 103K-T | B | 149.0/118.9 |
| C1312 | 4030007060 | S.CER C1608 CH 1H 270J-T | T | 155.5/111.7 |
| C1313 | 4030007060 | S.CER C1608 CH 1H 270J-T | T | 159.1/127.1 |

## [RXPLL-B UNIT]

| REF NO. | PARTS NO. | DESCRIPTION | M. | H/V LOCATION |
|---|---|---|---|---|
| C1355 | 4030006880 | S.CER C1608 JB 1H 472K-T | T | 144.7/70.0 |
| C1357 | 4030007000 | S.CER C1608 CH 1H 090D-T | B | 144.6/67.2 |
| C1358 | 4030011600 | S.CER C1608 JB 1E 104K-T | B | 139.2/70.5 |
| C1360 | 4030011600 | S.CER C1608 JB 1E 104K-T | B | 146.4/70.5 |
| C1361 | 4030007020 | S.CER C1608 CH 1H 120J-T | B | 137.8/69.5 |
| C1362 | 4030011600 | S.CER C1608 JB 1E 104K-T | T | 137.5/65.6 |
| C1403 | 4030017810 | S.CER C1608 CH 1H 102J-T | T | 114.8/70.4 |
| C1404 | 4030017810 | S.CER C1608 CH 1H 102J-T | T | 116.3/104.8 |
| C1405 | 4030006900 | S.CER C1608 JB 1H 103K-T | B | 115.9/63.9 |
| C1406 | 4030017810 | S.CER C1608 CH 1H 102J-T | T | 114.3/66.3 |
| C1407 | 4030017810 | S.CER C1608 CH 1H 102J-T | T | 120.0/70.3 |
| C1408 | 4030006900 | S.CER C1608 JB 1H 103K-T | T | 116.4/73.0 |
| C1409 | 4030006900 | S.CER C1608 JB 1H 103K-T | T | 114.4/68.2 |
| C1410 | 4030007030 | S.CER C1608 CH 1H 150J-T | T | 116.3/83.4 |
| C1411 | 4030006990 | S.CER C1608 CH 1H 080D-T | T | 112.2/87.9 |
| C1412 | 4030007030 | S.CER C1608 CH 1H 150J-T | T | 116.3/93.8 |
| C1413 | 4030007020 | S.CER C1608 CH 1H 120J-T | T | 107.0/83.4 |
| C1414 | 4030006990 | S.CER C1608 CH 1H 080D-T | T | 103.6/86.7 |
| C1415 | 4030007020 | S.CER C1608 CH 1H 120J-T | T | 107.0/93.8 |
| C1416 | 4030006900 | S.CER C1608 JB 1H 103K-T | T | 113.2/103.5 |
| C1417 | 4030006900 | S.CER C1608 JB 1H 103K-T | T | 110.6/107.7 |
| C1418 | 4030017810 | S.CER C1608 CH 1H 102J-T | T | 110.4/105.8 |
| C1419 | 4030017810 | S.CER C1608 CH 1H 102J-T | T | 111.0/109.0 |
| C1420 | 4030007120 | S.CER C1608 CH 1H 820J-T | B | 113.2/114.3 |
| C1421 | 4030007150 | S.CER C1608 CH 1H 151J-T | B | 115.0/114.3 |
| C1423 | 4030010750 | S.CER C1608 CH 1H 201J-T | B | 120.3/111.1 |
| C1424 | 4030007010 | S.CER C1608 CH 1H 100D-T | T | 132.8/103.4 |
| C1425 | 4030011600 | S.CER C1608 JB 1E 104K-T | T | 136.5/106.3 |
| C1426 | 4030011600 | S.CER C1608 JB 1E 104K-T | T | 137.8/106.3 |
| C1427 | 4030006900 | S.CER C1608 JB 1H 103K-T | T | 133.9/106.3 |
| C1428 | 4030006980 | S.CER C1608 CH 1H 070D-T | T | 119.6/109.0 |
| C1429 | 4030006900 | S.CER C1608 JB 1H 103K-T | T | 120.6/113.6 |
| C1430 | 4030007040 | S.CER C1608 CH 1H 180J-T | B | 131.9/115.4 |
| C1431 | 4030017810 | S.CER C1608 CH 1H 102J-T | T | 127.1/116.2 |
| C1432 | 4030009980 | S.CER C1608 JB 1H 152K-T | T | 129.1/114.2 |
| C1433 | 4030011600 | S.CER C1608 JB 1E 104K-T | T | 130.4/114.2 |
| C1434 | 4030009920 | S.CER C1608 CH 1H 050B-T | B | 124.7/134.4 |
| C1435 | 4030009920 | S.CER C1608 CH 1H 050B-T | B | 124.7/131.6 |
| C1436 | 4030011600 | S.CER C1608 JB 1E 104K-T | B | 137.3/122.2 |
| C1437 | 4030009920 | S.CER C1608 CH 1H 050B-T | T | 104.0/83.4 |
| C1438 | 4030009920 | S.CER C1608 CH 1H 050B-T | T | 102.3/86.7 |
| C1439 | 4030009920 | S.CER C1608 CH 1H 050B-T | T | 110.0/93.8 |
| C1441 | 4030006880 | S.CER C1608 JB 1H 472K-T | T | 120.6/116.2 |
| C1451 | 4030007020 | S.CER C1608 CH 1H 120J-T | T | 125.5/80.2 |
| C1453 | 4030007030 | S.CER C1608 CH 1H 150J-T | T | 122.1/85.1 |
| C1454 | 4030007030 | S.CER C1608 CH 1H 150J-T | T | 120.8/85.1 |
| C1456 | 4030007020 | S.CER C1608 CH 1H 120J-T | T | 125.6/90.9 |
| C1457 | 4030006900 | S.CER C1608 JB 1H 103K-T | T | 118.4/72.9 |
| C1458 | 4030006900 | S.CER C1608 JB 1H 103K-T | T | 116.6/103.5 |
| C1501 | 4030018530 | S.CER C3216 CH 1H 103J-T | T | 131.3/124.6 |
| C1502 | 4550007660 | S.TAN F931E105MAABMA | T | 132.1/139.3 |
| Eqv. | 4550003220 | S.TAN TEESVA 1E 105M8R | | |
| C1503 | 4030006900 | S.CER C1608 JB 1H 103K-T | T | 137.0/142.1 |
| C1504 | 4030012610 | S.CER C2012 JB 1C 474K-T | T | 136.7/140.5 |
| C1505 | 4030007010 | S.CER C1608 CH 1H 100D-T | T | 130.0/143.5 |
| C1506 | 4030010760 | S.CER C1608 CH 1H 331J-T | T | 131.3/146.3 |
| C1507 | 4510008540 | S.ELE EEE1CA100SR | T | 142.6/140.8 |
| C1508 | 4030011600 | S.CER C1608 JB 1E 104K-T | B | 128.8/148.8 |
| C1509 | 4030018800 | S.CER C3216 CH 1H 223J-T | T | 135.8/145.1 |
| C1510 | 4030007110 | S.CER C1608 CH 1H 680J-T | T | 136.5/158.9 |
| C1511 | 4510008540 | S.ELE EEE1CA100SR | T | 132.7/150.6 |
| C1512 | 4030011600 | S.CER C1608 JB 1E 104K-T | T | 129.6/149.0 |
| C1513 | 4030011600 | S.CER C1608 JB 1E 104K-T | T | 129.6/158.1 |
| C1514 | 4510008540 | S.ELE EEE1CA100SR | T | 132.7/156.5 |
| C1515 | 4030007160 | S.CER C1608 CH 1H 181J-T | T | 132.2/160.8 |
| C1516 | 4030009350 | S.CER C1608 CH 1H 3R5B-T | T | 130.9/160.8 |
| C1517 | 4030007110 | S.CER C1608 CH 1H 680J-T | T | 115.3/155.0 |
| C1518 | 4030018530 | S.CER C3216 CH 1H 103J-T | T | 131.3/132.8 |
| C1519 | 4550007660 | S.TAN F931E105MAABMA | T | 122.9/140.9 |
| Eqv. | 4550003220 | S.TAN TEESVA 1E 105M8R | | |
| C1520 | 4030006900 | S.CER C1608 JB 1H 103K-T | T | 119.8/140.8 |
| C1521 | 4030012610 | S.CER C2012 JB 1C 474K-T | T | 116.2/142.1 |
| C1522 | 4030007010 | S.CER C1608 CH 1H 100D-T | T | 123.7/143.5 |
| C1523 | 4030010760 | S.CER C1608 CH 1H 331J-T | T | 122.4/146.3 |
| C1524 | 4030018800 | S.CER C3216 CH 1H 223J-T | T | 117.9/145.2 |
| C1525 | 4510008540 | S.ELE EEE1CA100SR | T | 124.9/150.6 |
| C1526 | 4030011600 | S.CER C1608 JB 1E 104K-T | T | 128.0/149.0 |
| C1527 | 4030011600 | S.CER C1608 JB 1E 104K-T | T | 128.0/158.1 |
| C1528 | 4510008540 | S.ELE EEE1CA100SR | T | 124.9/156.5 |
| C1529 | 4030017870 | S.CER C1608 CH 1H 681J-T | T | 125.4/160.8 |
| C1530 | 4030011330 | S.CER C1608 CH 1H 391J-T | T | 126.7/160.8 |
| C1531 | 4510008500 | S.ELE EEE1CA101WP | T | 111.3/167.3 |
| C1532 | 4030011600 | S.CER C1608 JB 1E 104K-T | T | 107.1/167.3 |
| C1533 | 4030011600 | S.CER C1608 JB 1E 104K-T | T | 115.5/167.3 |
| C1534 | 4510008500 | S.ELE EEE1CA101WP | T | 119.7/167.3 |
| C1535 | 4030011600 | S.CER C1608 JB 1E 104K-T | T | 133.7/172.6 |
| C1536 | 4030017870 | S.CER C1608 CH 1H 681J-T | T | 126.2/179.5 |
| C1537 | 4510008500 | S.ELE EEE1CA101WP | T | 111.3/176.0 |
| C1538 | 4030011600 | S.CER C1608 JB 1E 104K-T | T | 107.1/176.0 |
| C1539 | 4030011600 | S.CER C1608 JB 1E 104K-T | T | 115.5/176.0 |
| C1540 | 4510008500 | S.ELE EEE1CA101WP | T | 119.7/176.0 |
| C1541 | 4030007050 | S.CER C1608 CH 1H 220J-T | T | 124.0/175.0 |
| C1651 | 4030006880 | S.CER C1608 JB 1H 472K-T | B | 105.5/144.1 |
| C1653 | 4030006880 | S.CER C1608 JB 1H 472K-T | B | 109.0/137.2 |
| C1654 | 4030017810 | S.CER C1608 CH 1H 102J-T | B | 106.9/137.2 |
| C1655 | 4030009530 | S.CER C1608 CH 1H 030B-T | T | 107.6/136.8 |
| C1656 | 4610001970 | S.TRI TZC3P200A110R00 (TZC03P200A1102) | T | 110.9/136.2 |
| C1657 | 4030010220 | S.CER C2012 CH 1H 102J-T | T | 116.4/122.8 |
| C1658 | 4030010220 | S.CER C2012 CH 1H 102J-T | T | 116.4/131.0 |
| C1659 | 4030011600 | S.CER C1608 JB 1E 104K-T | T | 107.8/120.1 |
| C1660 | 4030011600 | S.CER C1608 JB 1E 104K-T | B | 134.0/174.0 |
| C1661 | 4030011600 | S.CER C1608 JB 1E 104K-T | B | 145.2/171.4 |
| C1662 | 4030011600 | S.CER C1608 JB 1E 104K-T | T | 144.3/178.0 |
| C1663 | 4030011600 | S.CER C1608 JB 1E 104K-T | T | 135.1/170.2 |

Eqv.= This component is equivalent to the REF No. component listed above, and may be substituted on parts orders and repairs.

M.=Mounted side (T: Mounted on the Top side, B: Mounted on the Bottom side)
S.=Surface mount

## [RXPLL-B UNIT]

| REF NO. | PARTS NO. | DESCRIPTION | | M. | H/V LOCATION |
|---|---|---|---|---|---|
| C1665 | 4030006900 | S.CER | C1608 JB 1H 103K-T | T | 138.9/164.1 |
| C1666 | 4030006880 | S.CER | C1608 JB 1H 472K-T | B | 113.3/144.1 |
| C1701 | 4030011600 | S.CER | C1608 JB 1E 104K-T | T | 153.4/163.0 |
| C1702 | 4030011600 | S.CER | C1608 JB 1E 104K-T | T | 144.4/163.0 |
| C1703 | 4510004601 | ELE | 16 ME 1000 HC | | |
| C1704 | 4030011600 | S.CER | C1608 JB 1E 104K-T | B | 180.1/160.2 |
| C1705 | 4030011600 | S.CER | C1608 JB 1E 104K-T | B | 186.4/160.2 |
| C1706 | 4510008520 | S.ELE | EEE1CA470SP | T | 172.7/154.8 |
| C1707 | 4030011600 | S.CER | C1608 JB 1E 104K-T | T | 149.7/154.8 |
| C1708 | 4030006880 | S.CER | C1608 JB 1H 472K-T | T | 175.7/166.8 |
| C1709 | 4030006880 | S.CER | C1608 JB 1H 472K-T | T | 172.6/166.8 |
| C1710 | 4030006880 | S.CER | C1608 JB 1H 472K-T | T | 169.6/166.8 |
| C1711 | 4030011340 | S.CER | C1608 CH 1H 471J-T | T | 171.4/163.5 |
| C1712 | 4030011340 | S.CER | C1608 CH 1H 471J-T | T | 167.5/163.5 |
| C1713 | 4030006880 | S.CER | C1608 JB 1H 472K-T | B | 165.5/168.8 |
| C1714 | 4030006880 | S.CER | C1608 JB 1H 472K-T | B | 153.8/141.9 |
| C1716 | 4030006880 | S.CER | C1608 JB 1H 472K-T | B | 154.7/145.2 |
| C1717 | 4030006880 | S.CER | C1608 JB 1H 472K-T | B | 152.9/145.2 |
| C1719 | 4030006880 | S.CER | C1608 JB 1H 472K-T | B | 151.1/145.2 |
| C1720 | 4030006880 | S.CER | C1608 JB 1H 472K-T | B | 155.6/141.9 |
| C1721 | 4030006880 | S.CER | C1608 JB 1H 472K-T | B | 157.4/141.9 |
| RL1001 | 6330001750 | REL | FTR-B4CA012Z | | |
| RL1002 | 6330001750 | REL | FTR-B4CA012Z | | |
| RL1003 | 6330001750 | REL | FTR-B4CA012Z | | |
| RL1004 | 6330001750 | REL | FTR-B4CA012Z | | |
| RL1005 | 6330001750 | REL | FTR-B4CA012Z | | |
| RL1006 | 6330001750 | REL | FTR-B4CA012Z | | |
| RL1203 | 6330001750 | REL | FTR-B4CA012Z | | |
| RL1206 | 6330001750 | REL | FTR-B4CA012Z | | |
| J2 | 6510019991 | S.CON | 52808-2271(2291) | T | 25.0/9.0 |
| J10 | 6510028210 | CON | SJ050010 (TMP-J01X-V6) | | |
| J351 | 6510028210 | CON | SJ050010 (TMP-J01X-V6) | | |
| J561 | 6510028210 | CON | SJ050010 (TMP-J01X-V6) | | |
| J601 | 6510028210 | CON | SJ050010 (TMP-J01X-V6) | | |
| J681 | 6510028210 | CON | SJ050010 (TMP-J01X-V6) | | |
| J831 | 6510028210 | CON | SJ050010 (TMP-J01X-V6) | | |
| J1002 | 6510028210 | CON | SJ050010 (TMP-J01X-V6) | | |
| J1101 | 6510028210 | CON | SJ050010 (TMP-J01X-V6) | | |
| J1201 | 6510028210 | CON | SJ050010 (TMP-J01X-V6) | | |
| J1301 | 6510028210 | CON | SJ050010 (TMP-J01X-V6) | | |
| J1501 | 6510018961 | S.CON | B2B-PH-SM4-TB(LF)(SN) | T | 149.6/177.5 |
| J1701 | 6510019981 | S.CON | 52808-1671(1690) | T | 168.0/177.2 |
| W1052 | 9016201006 | WIR | 73/98/025/X98/X98 | | |
| W1401 | 9029495075 | JUM | 73/98/020/X98/X98 | | |
| W1411 | 7120000480 | S.JUM | MJP-0.4-T | T | 125.1/111.6 |
| EP20 | 6910012350 | S.BEA | MMZ1608Y 102BT | T | 85.4/126.0 |
| EP21 | 6910012350 | S.BEA | MMZ1608Y 102BT | T | 88.7/124.0 |
| EP22 | 6910012350 | S.BEA | MMZ1608Y 102BT | T | 90.0/124.0 |
| EP101 | 6910012350 | S.BEA | MMZ1608Y 102BT | B | 47.7/98.6 |
| EP102 | 6910012350 | S.BEA | MMZ1608Y 102BT | B | 47.7/96.8 |
| EP103 | 6910012350 | S.BEA | MMZ1608Y 102BT | T | 46.1/96.8 |
| EP104 | 6910012350 | S.BEA | MMZ1608Y 102BT | T | 46.1/92.9 |
| EP105 | 6910012350 | S.BEA | MMZ1608Y 102BT | T | 46.1/91.6 |
| EP106 | 6910012350 | S.BEA | MMZ1608Y 102BT | T | 46.1/89.0 |
| EP107 | 6910012350 | S.BEA | MMZ1608Y 102BT | B | 47.7/100.4 |
| EP1701 | 6910012350 | S.BEA | MMZ1608Y 102BT | T | 170.1/163.5 |
| EP1702 | 6910012350 | S.BEA | MMZ1608Y 102BT | T | 168.8/163.5 |
| EP1801 | 6910012350 | S.BEA | MMZ1608Y 102BT | B | 153.1/132.7 |
| EP1802 | 6910012350 | S.BEA | MMZ1608Y 102BT | B | 142.5/18.8 |
| EP1804 | 6910012350 | S.BEA | MMZ1608Y 102BT | B | 112.5/138.7 |
| EP1805 | 6910012350 | S.BEA | MMZ1608Y 102BT | B | 150.2/141.9 |
| EP1806 | 6910012350 | S.BEA | MMZ1608Y 102BT | B | 128.6/64.4 |
| EP1807 | 6910012350 | S.BEA | MMZ1608Y 102BT | B | 117.5/50.3 |
| EP1808 | 6910012350 | S.BEA | MMZ1608Y 102BT | B | 137.0/166.9 |
| EP1809 | 6910012350 | S.BEA | MMZ1608Y 102BT | B | 147.4/127.5 |
| EP1810 | 6910012350 | S.BEA | MMZ1608Y 102BT | B | 131.4/64.3 |
| EP1811 | 6910012350 | S.BEA | MMZ1608Y 102BT | T | 160.7/56.3 |
| EP1812 | 6910012350 | S.BEA | MMZ1608Y 102BT | B | 153.5/137.5 |
| EP1813 | 6910012350 | S.BEA | MMZ1608Y 102BT | B | 132.7/65.8 |
| EP1814 | 6910012350 | S.BEA | MMZ1608Y 102BT | B | 147.2/22.3 |
| EP1815 | 6910012350 | S.BEA | MMZ1608Y 102BT | B | 156.0/62.6 |
| EP1816 | 6910012350 | S.BEA | MMZ1608Y 102BT | B | 160.4/20.9 |
| EP1817 | 6910012350 | S.BEA | MMZ1608Y 102BT | B | 168.6/62.2 |
| EP1818 | 6910012350 | S.BEA | MMZ1608Y 102BT | B | 151.3/133.3 |
| EP1819 | 6910012350 | S.BEA | MMZ1608Y 102BT | B | 145.6/127.9 |
| EP1820 | 6910012350 | S.BEA | MMZ1608Y 102BT | B | 148.6/19.8 |
| EP1821 | 6910012350 | S.BEA | MMZ1608Y 102BT | B | 148.6/14.1 |
| EP1825 | 6910012350 | S.BEA | MMZ1608Y 102BT | B | 126.6/7.1 |
| EP1826 | 6910012350 | S.BEA | MMZ1608Y 102BT | B | 151.6/137.8 |
| EP1830 | 6910012350 | S.BEA | MMZ1608Y 102BT | B | 141.3/135.2 |
| EP1831 | 6910012350 | S.BEA | MMZ1608Y 102BT | B | 143.4/128.5 |
| EP1832 | 6910012350 | S.BEA | MMZ1608Y 102BT | B | 149.2/137.6 |
| EP1833 | 6910012350 | S.BEA | MMZ1608Y 102BT | B | 147.3/133.5 |
| EP1834 | 6910012350 | S.BEA | MMZ1608Y 102BT | T | 115.9/108.3 |
| EP1835 | 6910012350 | S.BEA | MMZ1608Y 102BT | B | 141.6/128.5 |
| EP1836 | 6910012350 | S.BEA | MMZ1608Y 102BT | T | 111.0/110.3 |
| EP1837 | 6910012350 | S.BEA | MMZ1608Y 102BT | B | 145.9/134.2 |
| EP1838 | 6910012350 | S.BEA | MMZ1608Y 102BT | T | 116.4/106.1 |

## [BPF UNIT]

| REF NO. | PARTS NO. | DESCRIPTION | | M. | H/V LOCATION |
|---|---|---|---|---|---|
| IC101 | 1130011510 | S.IC | BU2099FV-E2 | T | 9.5/77.6 |
| IC102 | 1130011510 | S.IC | BU2099FV-E2 | T | 9.8/100.9 |
| IC401 | 1130011510 | S.IC | BU2099FV-E2 | T | 10.3/39.4 |
| IC402 | 1130011510 | S.IC | BU2099FV-E2 | T | 9.6/59.5 |
| Q355 | 1590001330 | S.TRA | DTA114EUA T106 | T | 191.6/68.1 |
| Q381 | 1590000680 | S.TRA | DTC114EUA T106 | T | 232.0/60.3 |
| Q383 | 1590000680 | S.TRA | DTC114EUA T106 | T | 229.3/51.9 |
| Q384 | 1590000680 | S.TRA | DTC114EUA T106 | T | 226.2/51.9 |
| Q385 | 1590000680 | S.TRA | DTC114EUA T106 | T | 233.1/54.7 |
| Q386 | 1590000430 | S.TRA | DTC144EUA T106 | T | 230.1/54.7 |
| Q387 | 1590000680 | S.TRA | DTC114EUA T106 | T | 228.8/60.2 |
| Q401 | 1530002841 | S.TRA | 2SC4116-Y(TE85RF) | T | 234.5/108.2 |
| Q402 | 1530002060 | S.TRA | 2SC4081 T106 R | B | 224.2/99.3 |
| Q403 | 1590001330 | S.TRA | DTA114EUA T106 | B | 227.7/100.3 |
| Q404 | 1590000430 | S.TRA | DTC144EUA T106 | T | 232.0/108.2 |
| Q855 | 1590001330 | S.TRA | DTA114EUA T106 | T | 192.0/53.0 |
| Q871 | 1590001330 | S.TRA | DTA114EUA T106 | B | 234.6/18.8 |
| Q872 | 1530002060 | S.TRA | 2SC4081 T106 R | B | 231.2/19.5 |
| Q873 | 1530002841 | S.TRA | 2SC4116-Y(TE85RF) | B | 231.2/16.6 |
| Q874 | 1590000430 | S.TRA | DTC144EUA T106 | T | 195.7/57.4 |
| Q900 | 1590001330 | S.TRA | DTA114EUA T106 | B | 217.4/116.1 |
| Q901 | 1530003852 | S.TRA | 2SC5551A-F-TD-E | T | 210.3/113.5 |
| Q902 | 1590001330 | S.TRA | DTA114EUA T106 | T | 200.6/115.1 |
| Q903 | 1530003852 | S.TRA | 2SC5551A-F-TD-E | T | 189.4/113.5 |
| Q950 | 1590001330 | S.TRA | DTA114EUA T106 | B | 215.0/3.2 |
| Q951 | 1530003852 | S.TRA | 2SC5551A-F-TD-E | T | 209.8/17.6 |
| Q952 | 1590001330 | S.TRA | DTA114EUA T106 | B | 199.1/4.0 |
| Q953 | 1530003852 | S.TRA | 2SC5551A-F-TD-E | T | 188.6/17.6 |
| D1 | 1790001251 | S.DIO | MA2S1110GL | T | 184.0/75.2 |
| D21 | 1790001251 | S.DIO | MA2S1110GL | B | 167.1/77.7 |
| D51 | 1790001251 | S.DIO | MA2S1110GL | T | 163.7/68.6 |
| D81 | 1790001251 | S.DIO | MA2S1110GL | B | 141.6/68.2 |
| D111 | 1790001251 | S.DIO | MA2S1110GL | T | 107.4/67.6 |
| D141 | 1790001251 | S.DIO | MA2S1110GL | T | 94.7/70.3 |
| D171 | 1790001251 | S.DIO | MA2S1110GL | B | 81.6/74.3 |
| D201 | 1790001251 | S.DIO | MA2S1110GL | B | 70.2/73.2 |
| D231 | 1790001251 | S.DIO | MA2S1110GL | T | 49.4/69.2 |
| D261 | 1790001251 | S.DIO | MA2S1110GL | B | 35.4/70.1 |
| D291 | 1790001251 | S.DIO | MA2S1110GL | B | 204.0/72.0 |
| D321 | 1790001251 | S.DIO | MA2S1110GL | T | 204.1/97.5 |
| D351 | 1790001251 | S.DIO | MA2S1110GL | T | 189.1/95.0 |
| D352 | 1790001251 | S.DIO | MA2S1110GL | T | 189.1/88.7 |
| D353 | 1790001251 | S.DIO | MA2S1110GL | T | 189.1/82.5 |
| D354 | 1790001251 | S.DIO | MA2S1110GL | T | 189.1/76.3 |
| D355 | 1790001251 | S.DIO | MA2S1110GL | T | 194.0/66.3 |
| D371 | 1790001251 | S.DIO | MA2S1110GL | T | 218.5/70.0 |
| D373 | 1790001251 | S.DIO | MA2S1110GL | B | 239.8/116.1 |
| D391 | 1750000581 | S.DIO | 1SV307(TPH3F) | B | 233.2/50.0 |
| D392 | 1750000581 | S.DIO | 1SV307(TPH3F) | B | 236.0/52.9 |
| D393 | 1750000581 | S.DIO | 1SV307(TPH3F) | B | 235.3/63.7 |
| D401 | 1790001251 | S.DIO | MA2S1110GL | B | 225.6/95.6 |
| D402 | 1790000981 | S.DIO | MA3J7420GL | B | 234.0/113.3 |
| D501 | 1790001251 | S.DIO | MA2S1110GL | B | 184.1/45.6 |
| D531 | 1790001251 | S.DIO | MA2S1110GL | B | 167.7/53.7 |
| D561 | 1790001251 | S.DIO | MA2S1110GL | B | 164.5/42.5 |
| D591 | 1790001251 | S.DIO | MA2S1110GL | B | 144.1/53.4 |
| D621 | 1790001251 | S.DIO | MA2S1110GL | T | 107.6/52.6 |
| D651 | 1790001251 | S.DIO | MA2S1110GL | T | 94.9/49.6 |
| D681 | 1790001251 | S.DIO | MA2S1110GL | B | 81.5/45.7 |
| D711 | 1790001251 | S.DIO | MA2S1110GL | B | 70.0/44.4 |
| D741 | 1790001251 | S.DIO | MA2S1110GL | B | 51.4/50.5 |
| D771 | 1790001251 | S.DIO | MA2S1110GL | B | 36.5/43.8 |
| D801 | 1790001251 | S.DIO | MA2S1110GL | B | 203.8/47.4 |
| D831 | 1790001251 | S.DIO | MA2S1110GL | T | 203.7/22.1 |
| D851 | 1790001251 | S.DIO | MA2S1110GL | T | 189.1/27.9 |
| D852 | 1790001251 | S.DIO | MA2S1110GL | T | 189.1/33.1 |
| D853 | 1790001251 | S.DIO | MA2S1110GL | T | 189.1/39.3 |
| D854 | 1790001251 | S.DIO | MA2S1110GL | T | 189.1/45.5 |
| D855 | 1790001251 | S.DIO | MA2S1110GL | T | 194.0/52.8 |
| D871 | 1790001251 | S.DIO | MA2S1110GL | B | 241.4/18.0 |
| D872 | 1790000981 | S.DIO | MA3J7420GL | B | 247.7/15.6 |
| D873 | 1790001251 | S.DIO | MA2S1110GL | B | 243.1/94.1 |
| D900 | 1790001251 | S.DIO | MA2S1110GL | B | 218.9/100.5 |
| D901 | 1790001251 | S.DIO | MA2S1110GL | T | 207.9/100.7 |
| D902 | 1790001251 | S.DIO | MA2S1110GL | B | 197.0/100.2 |
| D903 | 1790001251 | S.DIO | MA2S1110GL | B | 186.4/100.5 |
| D950 | 1790001251 | S.DIO | MA2S1110GL | B | 212.3/3.9 |
| D951 | 1790001251 | S.DIO | MA2S1110GL | T | 204.4/4.5 |
| D952 | 1790001251 | S.DIO | MA2S1110GL | B | 195.7/4.9 |
| D953 | 1790001251 | S.DIO | MA2S1110GL | B | 182.6/5.3 |
| D954 | 1790001251 | S.DIO | MA2S1110GL | T | 235.4/16.3 |
| L1 | 6200005521 | S.COI | NLV25T-470J | B | 211.7/110.3 |
| L2 | 6200005521 | S.COI | NLV25T-470J | B | 222.2/110.3 |
| L3 | 6200010830 | S.COI | C2520C-3R3G-A | B | 204.7/110.3 |
| L4 | 6200010830 | S.COI | C2520C-3R3G-A | T | 218.7/109.6 |
| L5 | 6200010830 | S.COI | C2520C-3R3G-A | B | 225.7/110.3 |
| L6 | 6200010830 | S.COI | C2520C-3R3G-A | B | 215.2/110.3 |
| L23 | 6140004040 | COI | LR-443 | | |
| L24 | 6140004050 | COI | LR-444 | | |
| L25 | 6140004050 | COI | LR-444 | | |
| L26 | 6140004050 | COI | LR-444 | | |
| L27 | 6140004040 | COI | LR-443 | | |
| L52 | 6200005521 | S.COI | NLV25T-470J | T | 114.9/88.1 |
| L53 | 6140004060 | COI | LR-445 | | |
| L54 | 6140004080 | COI | LR-446 | | |
| L55 | 6140004080 | COI | LR-446 | | |
| L56 | 6140004080 | COI | LR-446 | | |
| L57 | 6140004060 | COI | LR-445 | | |
| L83 | 6140004090 | COI | LR-447 | | |

Eqv.= This component is equivalent to the REF No. component listed above, and may be substituted on parts orders and repairs.

M.=Mounted side (T: Mounted on the Top side, B: Mounted on the Bottom side)
S.=Surface mount

## [BPF UNIT]

| REF NO. | PARTS NO. | DESCRIPTION | | M. | H/V LOCATION |
|---|---|---|---|---|---|
| L84 | 6140004230 | COI | LR-458 | | |
| L85 | 6140004230 | COI | LR-458 | | |
| L86 | 6140004230 | COI | LR-458 | | |
| L87 | 6140004090 | COI | LR-447 | | |
| L112 | 6200005521 | S.COI | NLV25T-470J | B | 114.5/109.1 |
| L113 | 6140004090 | COI | LR-447 | | |
| L114 | 6140004100 | COI | LR-448 | | |
| L115 | 6140004100 | COI | LR-448 | | |
| L116 | 6140004100 | COI | LR-448 | | |
| L117 | 6140004090 | COI | LR-447 | | |
| L141 | 6200005521 | S.COI | NLV25T-470J | B | 106.9/111.5 |
| L142 | 6200005521 | S.COI | NLV25T-470J | B | 100.4/107.7 |
| L143 | 6140004110 | COI | LR-449 | | |
| L144 | 6140004120 | COI | LR-450 | | |
| L145 | 6140004120 | COI | LR-450 | | |
| L146 | 6140004120 | COI | LR-450 | | |
| L147 | 6140004110 | COI | LR-449 | | |
| L171 | 6200005521 | S.COI | NLV25T-470J | B | 85.0/117.0 |
| L172 | 6200005521 | S.COI | NLV25T-470J | B | 81.8/115.5 |
| L173 | 6140004140 | COI | LR-451 | | |
| L174 | 6140004150 | COI | LR-452 | | |
| L175 | 6140004150 | COI | LR-452 | | |
| L176 | 6140004150 | COI | LR-452 | | |
| L177 | 6140004140 | COI | LR-451 | | |
| L201 | 6200007021 | S.COI | NLV25T-270J | T | 22.2/45.0 |
| L203 | 6140004160 | COI | LR-453 | | |
| L204 | 6140004180 | COI | LR-454 | | |
| L205 | 6140004180 | COI | LR-454 | | |
| L206 | 6140004180 | COI | LR-454 | | |
| L207 | 6140004160 | COI | LR-453 | | |
| L231 | 6200005011 | S.COI | NLV25T-100J | B | 44.3/117.0 |
| L232 | 6200005011 | S.COI | NLV25T-100J | B | 44.2/114.3 |
| L233 | 6140004190 | COI | LR-455 | | |
| L234 | 6140004210 | COI | LR-456 | | |
| L235 | 6140004210 | COI | LR-456 | | |
| L236 | 6140004210 | COI | LR-456 | | |
| L237 | 6140004190 | COI | LR-455 | | |
| L261 | 6200009141 | S.COI | NLV25T-6R8J | B | 27.4/111.4 |
| L262 | 6200009141 | S.COI | NLV25T-6R8J | B | 24.9/109.7 |
| L263 | 6140004220 | COI | LR-457 | | |
| L264 | 6140004160 | COI | LR-453 | | |
| L265 | 6140004160 | COI | LR-453 | | |
| L266 | 6140004160 | COI | LR-453 | | |
| L267 | 6140004220 | COI | LR-457 | | |
| L291 | 6200003281 | S.COI | NLV25T-2R2J | B | 222.9/74.2 |
| L292 | 6200003281 | S.COI | NLV25T-2R2J | B | 214.1/75.2 |
| L293 | 6200008090 | S.COI | LQW2BHN68NJ03L | T | 214.7/79.7 |
| L294 | 6200003041 | S.COI | NLV32T-R68J | T | 213.6/82.7 |
| L295 | 6200008090 | S.COI | LQW2BHN68NJ03L | T | 210.1/79.7 |
| L296 | 6200010870 | S.COI | C2520C-R33G-A (0.33U) | T | 210.0/76.6 |
| L321 | 6200003281 | S.COI | NLV25T-2R2J | B | 209.6/93.5 |
| L322 | 6200003281 | S.COI | NLV25T-2R2J | B | 213.3/95.4 |
| L323 | 6200003011 | S.COI | NLV32T-R27J | T | 214.2/91.1 |
| L324 | 6200003001 | S.COI | NLV32T-R22J | T | 209.8/87.2 |
| L325 | 6200003011 | S.COI | NLV32T-R27J | T | 209.6/93.2 |
| L371 | 6140004390 | COI | LR-459 | | |
| L372 | 6140004390 | COI | LR-459 | | |
| L373 | 6140003530 | COI | LR-395 | | |
| L391 | 6200005491 | S.COI | NLV32T-331J | T | 230.2/48.4 |
| L392 | 6200005491 | S.COI | NLV32T-331J | T | 231.7/64.0 |
| L393 | 6200003211 | S.COI | NLV32T-820J | B | 231.8/42.8 |
| L394 | 6200005491 | S.COI | NLV32T-331J | B | 236.3/46.6 |
| L395 | 6200005491 | S.COI | NLV32T-331J | B | 225.6/48.3 |
| L501 | 6200005521 | S.COI | NLV25T-470J | B | 183.7/36.2 |
| L502 | 6200005521 | S.COI | NLV25T-470J | B | 184.6/41.0 |
| L504 | 6200010830 | S.COI | C2520C-3R3G-A | T | 178.7/33.2 |
| L505 | 6200010830 | S.COI | C2520C-3R3G-A | T | 177.8/41.5 |
| L506 | 6200010830 | S.COI | C2520C-3R3G-A | T | 179.0/37.7 |
| L507 | 6200010830 | S.COI | C2520C-3R3G-A | T | 179.2/45.1 |
| L531 | 6200005521 | S.COI | NLV25T-470J | B | 167.5/13.0 |
| L532 | 6200005521 | S.COI | NLV25T-470J | B | 170.5/13.0 |
| L533 | 6140004040 | COI | LR-443 | | |
| L534 | 6140004050 | COI | LR-444 | | |
| L535 | 6140004050 | COI | LR-444 | | |
| L536 | 6140004050 | COI | LR-444 | | |
| L537 | 6140004040 | COI | LR-443 | | |
| L561 | 6200005521 | S.COI | NLV25T-470J | B | 150.0/12.4 |
| L562 | 6200005521 | S.COI | NLV25T-470J | B | 153.9/16.6 |
| L563 | 6140004060 | COI | LR-445 | | |
| L564 | 6140004080 | COI | LR-446 | | |
| L565 | 6140004080 | COI | LR-446 | | |
| L566 | 6140004080 | COI | LR-446 | | |
| L567 | 6140004060 | COI | LR-445 | | |
| L591 | 6200005521 | S.COI | NLV25T-470J | B | 139.9/9.3 |
| L592 | 6200005521 | S.COI | NLV25T-470J | B | 142.7/9.2 |
| L593 | 6140004090 | COI | LR-447 | | |
| L594 | 6140004230 | COI | LR-458 | | |
| L595 | 6140004230 | COI | LR-458 | | |
| L596 | 6140004230 | COI | LR-458 | | |
| L597 | 6140004090 | COI | LR-447 | | |
| L621 | 6200005521 | S.COI | NLV25T-470J | B | 116.8/9.5 |
| L622 | 6200005521 | S.COI | NLV25T-470J | B | 122.4/6.4 |
| L623 | 6140004090 | COI | LR-447 | | |
| L624 | 6140004100 | COI | LR-448 | | |
| L625 | 6140004100 | COI | LR-448 | | |
| L626 | 6140004100 | COI | LR-448 | | |
| L627 | 6140004090 | COI | LR-447 | | |
| L651 | 6200005521 | S.COI | NLV25T-470J | T | 15.6/176.3 |
| L653 | 6140004110 | COI | LR-449 | | |
| L654 | 6140004120 | COI | LR-450 | | |
| L655 | 6140004120 | COI | LR-450 | | |
| L656 | 6140004120 | COI | LR-450 | | |
| L657 | 6140004110 | COI | LR-449 | | |
| L681 | 6200005521 | S.COI | NLV25T-470J | T | 37.4/176.2 |
| L682 | 6200005521 | S.COI | NLV25T-470J | T | 37.8/172.6 |

## [BPF UNIT]

| REF NO. | PARTS NO. | DESCRIPTION | | M. | H/V LOCATION |
|---|---|---|---|---|---|
| L683 | 6140004140 | COI | LR-451 | | |
| L684 | 6140004150 | COI | LR-452 | | |
| L685 | 6140004150 | COI | LR-452 | | |
| L686 | 6140004150 | COI | LR-452 | | |
| L687 | 6140004140 | COI | LR-451 | | |
| L711 | 6200007021 | S.COI | NLV25T-270J | B | 56.5/10.8 |
| L712 | 6200007021 | S.COI | NLV25T-270J | B | 61.2/8.8 |
| L713 | 6140004160 | COI | LR-453 | | |
| L714 | 6140004180 | COI | LR-454 | | |
| L715 | 6140004180 | COI | LR-454 | | |
| L716 | 6140004180 | COI | LR-454 | | |
| L717 | 6140004160 | COI | LR-453 | | |
| L741 | 6200005011 | S.COI | NLV25T-100J | B | 44.2/6.2 |
| L742 | 6200005011 | S.COI | NLV25T-100J | B | 46.3/3.4 |
| L743 | 6140004190 | COI | LR-455 | | |
| L744 | 6140004210 | COI | LR-456 | | |
| L745 | 6140004210 | COI | LR-456 | | |
| L746 | 6140004210 | COI | LR-456 | | |
| L747 | 6140004190 | COI | LR-455 | | |
| L771 | 6200009141 | S.COI | NLV25T-6R8J | B | 23.4/10.7 |
| L772 | 6200009141 | S.COI | NLV25T-6R8J | B | 27.1/9.0 |
| L773 | 6140004220 | COI | LR-457 | | |
| L774 | 6140004160 | COI | LR-453 | | |
| L775 | 6140004160 | COI | LR-453 | | |
| L776 | 6140004160 | COI | LR-453 | | |
| L777 | 6140004220 | COI | LR-457 | | |
| L801 | 6200003281 | S.COI | NLV25T-2R2J | B | 214.4/45.7 |
| L802 | 6200003281 | S.COI | NLV25T-2R2J | B | 211.8/42.4 |
| L805 | 6200008090 | S.COI | LQW2BHN68NJ03L | T | 214.6/41.4 |
| L806 | 6200003041 | S.COI | NLV32T-R68J | T | 211.6/37.0 |
| L807 | 6200008090 | S.COI | LQW2BHN68NJ03L | T | 209.7/40.1 |
| L808 | 6200010870 | S.COI | C2520C-R33G-A (0.33U) | T | 209.8/43.1 |
| L831 | 6200003281 | S.COI | NLV25T-2R2J | B | 211.6/26.7 |
| L832 | 6200003281 | S.COI | NLV25T-2R2J | B | 213.2/23.7 |
| L833 | 6200003011 | S.COI | NLV32T-R27J | T | 214.2/29.7 |
| L834 | 6200003001 | S.COI | NLV32T-R22J | T | 209.7/32.9 |
| L835 | 6200003011 | S.COI | NLV32T-R27J | T | 209.4/27.3 |
| L900 | 6200001831 | S.COI | NLV32T-100J | B | 213.2/113.1 |
| L901 | 6200003950 | S.COI | HF50ACC 322513-T | B | 11.6/20.4 |
| L902 | 6200003950 | S.COI | HF50ACC 322513-T | B | 11.7/16.4 |
| L903 | 6200001831 | S.COI | NLV32T-100J | T | 7.4/27.5 |
| L904 | 6200001831 | S.COI | NLV32T-100J | T | 11.6/27.5 |
| L905 | 6140004380 | COI | LR-498 | | |
| L906 | 6200009690 | S.COI | LQH43CN101K03L | T | 216.9/114.5 |
| L907 | 6200001831 | S.COI | NLV32T-100J | B | 193.1/113.1 |
| L908 | 6140004380 | COI | LR-498 | | |
| L909 | 6200009690 | S.COI | LQH43CN101K03L | T | 196.0/115.1 |
| L950 | 6200001831 | S.COI | NLV32T-100J | B | 211.8/17.0 |
| L951 | 6140004380 | COI | LR-498 | | |
| L952 | 6200009690 | S.COI | LQH43CN101K03L | T | 213.8/3.4 |
| L953 | 6200001831 | S.COI | NLV32T-100J | B | 191.1/17.0 |
| L954 | 6140004380 | COI | LR-498 | | |
| L955 | 6200009690 | S.COI | LQH43CN101K03L | T | 196.0/3.3 |
| | | | | | |
| R1 | 7030003640 | S.RES | ERJ3GEYJ 473 V (47K) | T | 181.4/92.2 |
| R3 | 7030003860 | S.RES | ERJ3GE JPW V | T | 182.1/90.3 |
| R101 | 7030003320 | S.RES | ERJ3GEYJ 101 V (100) | T | 7.2/67.9 |
| R102 | 7030003320 | S.RES | ERJ3GEYJ 101 V (100) | T | 8.0/71.3 |
| R103 | 7030003320 | S.RES | ERJ3GEYJ 101 V (100) | T | 8.8/67.9 |
| R104 | 7030003320 | S.RES | ERJ3GEYJ 101 V (100) | T | 9.4/71.0 |
| R105 | 7030003320 | S.RES | ERJ3GEYJ 101 V (100) | T | 10.7/71.0 |
| R106 | 7030003320 | S.RES | ERJ3GEYJ 101 V (100) | T | 11.3/90.0 |
| R107 | 7030003320 | S.RES | ERJ3GEYJ 101 V (100) | T | 11.6/87.9 |
| R108 | 7030003320 | S.RES | ERJ3GEYJ 101 V (100) | T | 11.2/83.2 |
| R117 | 7030003320 | S.RES | ERJ3GEYJ 101 V (100) | T | 9.9/83.5 |
| R118 | 7030003320 | S.RES | ERJ3GEYJ 101 V (100) | T | 8.6/83.5 |
| R119 | 7030003320 | S.RES | ERJ3GEYJ 101 V (100) | T | 7.4/87.2 |
| R120 | 7030003320 | S.RES | ERJ3GEYJ 101 V (100) | T | 6.7/83.2 |
| R121 | 7030003320 | S.RES | ERJ3GEYJ 101 V (100) | T | 6.9/92.2 |
| R122 | 7030003320 | S.RES | ERJ3GEYJ 101 V (100) | T | 7.1/94.8 |
| R123 | 7030003320 | S.RES | ERJ3GEYJ 101 V (100) | B | 10.0/95.5 |
| R124 | 7030003320 | S.RES | ERJ3GEYJ 101 V (100) | T | 11.0/94.3 |
| R133 | 7030003560 | S.RES | ERJ3GEYJ 103 V (10K) | T | 191.2/55.8 |
| R134 | 7030003320 | S.RES | ERJ3GEYJ 101 V (100) | B | 10.0/98.9 |
| R141 | 7030003360 | S.RES | ERJ3GEYJ 221 V (220) | B | 5.6/14.0 |
| R142 | 7030003360 | S.RES | ERJ3GEYJ 221 V (220) | B | 5.6/15.7 |
| R143 | 7030003360 | S.RES | ERJ3GEYJ 221 V (220) | B | 5.1/19.2 |
| R351 | 7030003340 | S.RES | ERJ3GEYJ 151 V (150) | B | 197.7/90.7 |
| R352 | 7030003300 | S.RES | ERJ3GEYJ 680 V (68) | B | 193.9/87.6 |
| R354 | 7030003280 | S.RES | ERJ3GEYJ 470 V (47) | B | 201.0/84.8 |
| R355 | 7030003320 | S.RES | ERJ3GEYJ 101 V (100) | B | 193.9/81.4 |
| R357 | 7030003240 | S.RES | ERJ3GEYJ 220 V (22) | B | 197.9/71.6 |
| R358 | 7030003350 | S.RES | ERJ3GEYJ 181 V (180) | B | 194.5/70.4 |
| R360 | 7030003320 | S.RES | ERJ3GEYJ 101 V (100) | T | 191.8/66.1 |
| R371 | 7030003320 | S.RES | ERJ3GEYJ 101 V (100) | T | 217.5/71.3 |
| R372 | 7030003320 | S.RES | ERJ3GEYJ 101 V (100) | B | 209.6/62.0 |
| R373 | 7030003320 | S.RES | ERJ3GEYJ 101 V (100) | B | 209.6/59.0 |
| R381 | 7030003520 | S.RES | ERJ3GEYJ 472 V (4.7K) | T | 231.4/51.9 |
| R382 | 7030003360 | S.RES | ERJ3GEYJ 221 V (220) | B | 239.9/112.7 |
| R383 | 7030003680 | S.RES | ERJ3GEYJ 104 V (100K) | T | 232.4/49.1 |
| R384 | 7030003420 | S.RES | ERJ3GEYJ 681 V (680) | B | 236.1/50.0 |
| R385 | 7030003420 | S.RES | ERJ3GEYJ 681 V (680) | B | 231.4/46.7 |
| R386 | 7030003480 | S.RES | ERJ3GEYJ 222 V (2.2K) | B | 237.6/62.7 |
| R387 | 7030003560 | S.RES | ERJ3GEYJ 103 V (10K) | B | 238.8/55.5 |
| R388 | 7540000130 | ABS | 2P-50A-301 | | |
| R389 | 7030003420 | S.RES | ERJ3GEYJ 681 V (680) | T | 235.0/65.4 |
| R390 | 7030003560 | S.RES | ERJ3GEYJ 103 V (10K) | T | 233.0/51.9 |
| R391 | 7030003680 | S.RES | ERJ3GEYJ 104 V (100K) | T | 234.3/51.9 |
| R392 | 7030003420 | S.RES | ERJ3GEYJ 681 V (680) | B | 234.8/50.0 |
| R393 | 7030003420 | S.RES | ERJ3GEYJ 681 V (680) | B | 231.4/48.0 |
| R394 | 7030003420 | S.RES | ERJ3GEYJ 681 V (680) | T | 235.0/64.1 |
| R395 | 7030003420 | S.RES | ERJ3GEYJ 681 V (680) | B | 235.3/56.4 |
| R396 | 7030003420 | S.RES | ERJ3GEYJ 681 V (680) | B | 235.3/55.1 |
| R401 | 7030003360 | S.RES | ERJ3GEYJ 221 V (220) | B | 227.7/96.3 |

Eqv.= This component is equivalent to the REF No. component listed above, and may be substituted on parts orders and repairs.

M.=Mounted side (T: Mounted on the Top side, B: Mounted on the Bottom side)
S.=Surface mount

## [BPF UNIT]

| REF NO. | PARTS NO. | DESCRIPTION | M. | H/V LOCATION |
|---|---|---|---|---|
| R402 | 7030003680 | S.RES ERJ3GEYJ 104 V (100K) | T | 234.6/111.6 |
| R403 | 7030003480 | S.RES ERJ3GEYJ 222 V (2.2K) | T | 232.0/110.3 |
| R404 | 7030003860 | S.RES ERJ3GE JPW V | T | 234.6/110.3 |
| R441 | 7030003360 | S.RES ERJ3GEYJ 221 V (220) | B | 11.0/24.4 |
| R442 | 7030003360 | S.RES ERJ3GEYJ 221 V (220) | B | 8.2/23.4 |
| R451 | 7030003320 | S.RES ERJ3GEYJ 101 V (100) | T | 10.6/32.9 |
| R452 | 7030003320 | S.RES ERJ3GEYJ 101 V (100) | T | 11.9/33.2 |
| R453 | 7030003320 | S.RES ERJ3GEYJ 101 V (100) | T | 13.2/33.2 |
| R454 | 7030003320 | S.RES ERJ3GEYJ 101 V (100) | T | 14.5/33.2 |
| R455 | 7030003320 | S.RES ERJ3GEYJ 101 V (100) | T | 14.5/36.9 |
| R456 | 7030003320 | S.RES ERJ3GEYJ 101 V (100) | T | 11.1/46.9 |
| R457 | 7030003320 | S.RES ERJ3GEYJ 101 V (100) | T | 8.9/46.3 |
| R458 | 7030003320 | S.RES ERJ3GEYJ 101 V (100) | T | 8.9/47.6 |
| R467 | 7030003320 | S.RES ERJ3GEYJ 101 V (100) | T | 10.6/49.6 |
| R468 | 7030003320 | S.RES ERJ3GEYJ 101 V (100) | T | 13.6/50.2 |
| R469 | 7030003320 | S.RES ERJ3GEYJ 101 V (100) | T | 7.6/49.4 |
| R470 | 7030003320 | S.RES ERJ3GEYJ 101 V (100) | T | 6.9/50.7 |
| R471 | 7030003320 | S.RES ERJ3GEYJ 101 V (100) | T | 6.2/52.6 |
| R472 | 7030003320 | S.RES ERJ3GEYJ 101 V (100) | T | 9.2/53.0 |
| R473 | 7030003320 | S.RES ERJ3GEYJ 101 V (100) | T | 10.5/53.7 |
| R474 | 7030003320 | S.RES ERJ3GEYJ 101 V (100) | T | 11.8/54.2 |
| R475 | 7030003320 | S.RES ERJ3GEYJ 101 V (100) | T | 10.7/64.0 |
| R481 | 7030003560 | S.RES ERJ3GEYJ 103 V (10K) | B | 196.9/55.9 |
| R501 | 7030003640 | S.RES ERJ3GEYJ 473 V (47K) | T | 183.0/30.0 |
| R503 | 7030003860 | S.RES ERJ3GE JPW V | T | 182.2/31.9 |
| R851 | 7030003340 | S.RES ERJ3GEYJ 151 V (150) | B | 198.2/32.2 |
| R852 | 7030003300 | S.RES ERJ3GEYJ 680 V (68) | B | 193.5/32.1 |
| R854 | 7030003280 | S.RES ERJ3GEYJ 470 V (47) | B | 200.9/34.7 |
| R855 | 7030003320 | S.RES ERJ3GEYJ 101 V (100) | B | 193.5/38.3 |
| R857 | 7030003240 | S.RES ERJ3GEYJ 220 V (22) | B | 197.9/48.2 |
| R858 | 7030003350 | S.RES ERJ3GEYJ 181 V (180) | B | 193.8/49.7 |
| R860 | 7030003320 | S.RES ERJ3GEYJ 101 V (100) | T | 192.0/51.0 |
| R871 | 7030003360 | S.RES ERJ3GEYJ 221 V (220) | B | 238.0/19.5 |
| R872 | 7030003680 | S.RES ERJ3GEYJ 104 V (100K) | B | 236.5/14.4 |
| R873 | 7030003480 | S.RES ERJ3GEYJ 222 V (2.2K) | B | 239.6/16.0 |
| R874 | 7030003860 | S.RES ERJ3GE JPW V | B | 236.5/16.0 |
| R900 | 7030003280 | S.RES ERJ3GEYJ 470 V (47) | B | 212.8/117.1 |
| R901 | 7030003440 | S.RES ERJ3GEYJ 102 V (1K) | T | 207.2/117.4 |
| R902 | 7030003530 | S.RES ERJ3GEYJ 562 V (5.6K) | T | 210.4/116.7 |
| R903 | 7030003380 | S.RES ERJ3GEYJ 331 V (330) | B | 203.9/113.3 |
| R904 | 7030003220 | S.RES ERJ3GEYJ 150 V (15) | B | 206.3/111.6 |
| R905 | 7030003380 | S.RES ERJ3GEYJ 331 V (330) | B | 203.3/111.8 |
| R906 | 7030003320 | S.RES ERJ3GEYJ 101 V (100) | T | 12.5/92.9 |
| R907 | 7030003320 | S.RES ERJ3GEYJ 101 V (100) | T | 13.8/92.9 |
| R908 | 7030003280 | S.RES ERJ3GEYJ 470 V (47) | B | 194.5/116.4 |
| R909 | 7030003440 | S.RES ERJ3GEYJ 102 V (1K) | T | 185.4/115.9 |
| R910 | 7030003530 | S.RES ERJ3GEYJ 562 V (5.6K) | T | 189.6/116.7 |
| R911 | 7030003320 | S.RES ERJ3GEYJ 101 V (100) | B | 209.4/110.8 |
| R912 | 7030003320 | S.RES ERJ3GEYJ 101 V (100) | B | 187.5/111.2 |
| R913 | 7030004050 | S.RES ERJ3GEYJ 1R0 V (1) | B | 189.8/106.1 |
| R950 | 7030003280 | S.RES ERJ3GEYJ 470 V (47) | B | 210.2/20.0 |
| R951 | 7030003440 | S.RES ERJ3GEYJ 102 V (1K) | T | 207.7/21.4 |
| R952 | 7030003530 | S.RES ERJ3GEYJ 562 V (5.6K) | T | 211.0/20.8 |
| R953 | 7030003380 | S.RES ERJ3GEYJ 331 V (330) | B | 203.4/18.4 |
| R954 | 7030003220 | S.RES ERJ3GEYJ 150 V (15) | B | 205.6/16.7 |
| R955 | 7030003380 | S.RES ERJ3GEYJ 331 V (330) | B | 202.8/16.7 |
| R956 | 7030003320 | S.RES ERJ3GEYJ 101 V (100) | T | 8.3/65.0 |
| R957 | 7030003320 | S.RES ERJ3GEYJ 101 V (100) | B | 11.6/60.5 |
| R958 | 7030003280 | S.RES ERJ3GEYJ 470 V (47) | B | 189.5/19.9 |
| R959 | 7030003440 | S.RES ERJ3GEYJ 102 V (1K) | T | 186.5/21.4 |
| R960 | 7030003530 | S.RES ERJ3GEYJ 562 V (5.6K) | T | 191.5/20.0 |
| R961 | 7030003320 | S.RES ERJ3GEYJ 101 V (100) | B | 208.3/16.4 |
| R962 | 7030003320 | S.RES ERJ3GEYJ 101 V (100) | B | 187.7/16.4 |
| R963 | 7030004050 | S.RES ERJ3GEYJ 1R0 V (1) | B | 181.5/16.6 |
| | | | | |
| C1 | 4030006880 | S.CER C1608 JB 1H 472K-T | B | 183.4/92.3 |
| C2 | 4030006880 | S.CER C1608 JB 1H 472K-T | T | 185.3/91.6 |
| C3 | 4030006880 | S.CER C1608 JB 1H 472K-T | T | 184.1/99.8 |
| C4 | 4030006880 | S.CER C1608 JB 1H 472K-T | B | 183.1/73.9 |
| C5 | 4030006880 | S.CER C1608 JB 1H 472K-T | B | 182.5/66.5 |
| C6 | 4030006880 | S.CER C1608 JB 1H 472K-T | T | 183.9/73.9 |
| C7 | 4030017840 | S.CER C2012 CH 1H 222J-T | T | 182.8/86.5 |
| C8 | 4030017850 | S.CER C2012 CH 1H 272J-T | T | 182.9/84.1 |
| C9 | 4030017820 | S.CER C2012 CH 1H 122J-T | T | 182.9/82.4 |
| C10 | 4030017840 | S.CER C2012 CH 1H 222J-T | T | 182.8/77.6 |
| C21 | 4030006880 | S.CER C1608 JB 1H 472K-T | B | 165.3/112.3 |
| C22 | 4030006880 | S.CER C1608 JB 1H 472K-T | B | 162.3/112.2 |
| C23 | 4030006880 | S.CER C1608 JB 1H 472K-T | B | 166.8/110.5 |
| C24 | 4030006880 | S.CER C1608 JB 1H 472K-T | T | 163.8/81.5 |
| C25 | 4030006880 | S.CER C1608 JB 1H 472K-T | B | 171.5/76.9 |
| C26 | 4030006880 | S.CER C1608 JB 1H 472K-T | B | 168.9/77.7 |
| C27 | 4030017810 | S.CER C1608 CH 1H 102J-T | B | 162.6/104.4 |
| C28 | 4030017810 | S.CER C1608 CH 1H 102J-T | B | 162.6/102.5 |
| C29 | 4030010760 | S.CER C1608 CH 1H 331J-T | B | 168.7/98.0 |
| C30 | 4030007140 | S.CER C1608 CH 1H 121J-T | B | 168.7/96.2 |
| C31 | 4030007160 | S.CER C1608 CH 1H 181J-T | B | 164.2/94.0 |
| C32 | 4030007060 | S.CER C1608 CH 1H 270J-T | B | 166.2/94.0 |
| C33 | 4030010760 | S.CER C1608 CH 1H 331J-T | B | 168.7/93.2 |
| C34 | 4030007090 | S.CER C1608 CH 1H 470J-T | B | 168.8/90.8 |
| C35 | 4030007160 | S.CER C1608 CH 1H 181J-T | B | 164.3/89.4 |
| C36 | 4030007060 | S.CER C1608 CH 1H 270J-T | B | 164.2/91.1 |
| C38 | 4030010760 | S.CER C1608 CH 1H 331J-T | B | 165.7/83.4 |
| C39 | 4030007140 | S.CER C1608 CH 1H 121J-T | B | 165.7/85.5 |
| C40 | 4030017810 | S.CER C1608 CH 1H 102J-T | B | 170.0/74.5 |
| C41 | 4030017810 | S.CER C1608 CH 1H 102J-T | B | 170.0/72.7 |
| C51 | 4030006880 | S.CER C1608 JB 1H 472K-T | T | 153.8/116.1 |
| C52 | 4030006880 | S.CER C1608 JB 1H 472K-T | B | 150.6/112.3 |
| C53 | 4030006880 | S.CER C1608 JB 1H 472K-T | B | 153.8/116.1 |
| C54 | 4030006880 | S.CER C1608 JB 1H 472K-T | B | 160.3/72.0 |
| C55 | 4030006880 | S.CER C1608 JB 1H 472K-T | B | 160.3/65.2 |
| C56 | 4030006880 | S.CER C1608 JB 1H 472K-T | T | 165.1/68.6 |
| C57 | 4030017800 | S.CER C1608 CH 1H 561J-T | B | 143.6/99.4 |
| C58 | 4030010760 | S.CER C1608 CH 1H 331J-T | B | 143.6/97.2 |
| C59 | 4030010760 | S.CER C1608 CH 1H 331J-T | B | 144.2/94.6 |

## [BPF UNIT]

| REF NO. | PARTS NO. | DESCRIPTION | M. | H/V LOCATION |
|---|---|---|---|---|
| C60 | 4030007080 | S.CER C1608 CH 1H 390J-T | B | 144.2/92.3 |
| C61 | 4030007100 | S.CER C1608 CH 1H 560J-T | B | 141.9/90.3 |
| C62 | 4030010760 | S.CER C1608 CH 1H 331J-T | B | 139.5/90.3 |
| C63 | 4030010760 | S.CER C1608 CH 1H 331J-T | B | 143.8/83.0 |
| C64 | 4030007090 | S.CER C1608 CH 1H 470J-T | B | 143.8/85.4 |
| C65 | 4030010760 | S.CER C1608 CH 1H 331J-T | B | 141.2/82.0 |
| C66 | 4030007100 | S.CER C1608 CH 1H 560J-T | B | 138.9/82.0 |
| C67 | 4030010760 | S.CER C1608 CH 1H 331J-T | B | 143.8/78.7 |
| C68 | 4030007080 | S.CER C1608 CH 1H 390J-T | B | 143.8/81.1 |
| C69 | 4030017800 | S.CER C1608 CH 1H 561J-T | B | 144.0/75.2 |
| C70 | 4030010760 | S.CER C1608 CH 1H 331J-T | B | 144.0/77.1 |
| C81 | 4030006880 | S.CER C1608 JB 1H 472K-T | B | 140.0/115.1 |
| C82 | 4030006880 | S.CER C1608 JB 1H 472K-T | B | 138.1/111.8 |
| C83 | 4030006880 | S.CER C1608 JB 1H 472K-T | B | 140.8/117.0 |
| C84 | 4030006880 | S.CER C1608 JB 1H 472K-T | B | 138.5/72.1 |
| C85 | 4030006880 | S.CER C1608 JB 1H 472K-T | B | 145.0/66.6 |
| C86 | 4030006880 | S.CER C1608 JB 1H 472K-T | B | 143.0/68.2 |
| C87 | 4030017800 | S.CER C1608 CH 1H 561J-T | B | 126.8/116.7 |
| C88 | 4030011330 | S.CER C1608 CH 1H 391J-T | B | 126.8/114.8 |
| C89 | 4030007160 | S.CER C1608 CH 1H 181J-T | B | 126.9/104.4 |
| C90 | 4030007070 | S.CER C1608 CH 1H 330J-T | B | 126.9/106.2 |
| C91 | 4030007030 | S.CER C1608 CH 1H 150J-T | B | 130.8/102.2 |
| C92 | 4030007120 | S.CER C1608 CH 1H 820J-T | B | 128.9/102.2 |
| C93 | 4030007140 | S.CER C1608 CH 1H 121J-T | B | 126.7/101.4 |
| C94 | 4030007100 | S.CER C1608 CH 1H 560J-T | B | 126.7/99.6 |
| C95 | 4030007120 | S.CER C1608 CH 1H 820J-T | B | 129.5/92.5 |
| C96 | 4030007030 | S.CER C1608 CH 1H 150J-T | B | 131.4/92.5 |
| C97 | 4030007160 | S.CER C1608 CH 1H 181J-T | B | 126.8/89.7 |
| C98 | 4030007070 | S.CER C1608 CH 1H 330J-T | B | 126.8/88.1 |
| C99 | 4030017800 | S.CER C1608 CH 1H 561J-T | B | 126.8/86.1 |
| C100 | 4030011330 | S.CER C1608 CH 1H 391J-T | B | 126.8/84.3 |
| C111 | 4030006880 | S.CER C1608 JB 1H 472K-T | B | 118.1/115.3 |
| C112 | 4030006880 | S.CER C1608 JB 1H 472K-T | B | 115.3/112.5 |
| C113 | 4030006880 | S.CER C1608 JB 1H 472K-T | B | 118.9/117.7 |
| C114 | 4030006880 | S.CER C1608 JB 1H 472K-T | B | 107.7/69.4 |
| C115 | 4030006880 | S.CER C1608 JB 1H 472K-T | B | 104.3/65.9 |
| C116 | 4030006880 | S.CER C1608 JB 1H 472K-T | T | 108.7/67.5 |
| C117 | 4030010760 | S.CER C1608 CH 1H 331J-T | B | 110.4/109.4 |
| C118 | 4030007150 | S.CER C1608 CH 1H 151J-T | B | 110.4/107.8 |
| C119 | 4030007150 | S.CER C1608 CH 1H 151J-T | B | 110.4/96.7 |
| C120 | 4030007060 | S.CER C1608 CH 1H 270J-T | B | 110.4/98.3 |
| C121 | 4030007060 | S.CER C1608 CH 1H 270J-T | B | 106.9/95.1 |
| C122 | 4030007140 | S.CER C1608 CH 1H 121J-T | B | 105.2/95.1 |
| C123 | 4030007150 | S.CER C1608 CH 1H 151J-T | B | 110.4/94.3 |
| C124 | 4030007010 | S.CER C1608 CH 1H 100D-T | B | 110.4/92.8 |
| C125 | 4030007140 | S.CER C1608 CH 1H 121J-T | B | 109.6/84.5 |
| C126 | 4030007060 | S.CER C1608 CH 1H 270J-T | B | 107.6/84.5 |
| C127 | 4030007150 | S.CER C1608 CH 1H 151J-T | B | 110.4/80.6 |
| C128 | 4030007060 | S.CER C1608 CH 1H 270J-T | B | 110.4/78.7 |
| C129 | 4030010760 | S.CER C1608 CH 1H 331J-T | B | 110.4/73.7 |
| C130 | 4030007150 | S.CER C1608 CH 1H 151J-T | B | 110.4/72.1 |
| C141 | 4030006880 | S.CER C1608 JB 1H 472K-T | B | 105.3/115.3 |
| C142 | 4030006880 | S.CER C1608 JB 1H 472K-T | B | 97.2/108.7 |
| C143 | 4030006880 | S.CER C1608 JB 1H 472K-T | B | 105.6/117.7 |
| C144 | 4030006880 | S.CER C1608 JB 1H 472K-T | B | 91.0/72.9 |
| C145 | 4030006880 | S.CER C1608 JB 1H 472K-T | B | 90.2/65.9 |
| C146 | 4030006880 | S.CER C1608 JB 1H 472K-T | T | 93.4/70.3 |
| C147 | 4030007170 | S.CER C1608 CH 1H 221J-T | B | 92.4/109.9 |
| C148 | 4030007170 | S.CER C1608 CH 1H 221J-T | B | 92.4/108.0 |
| C149 | 4030007130 | S.CER C1608 CH 1H 101J-T | B | 92.5/104.6 |
| C150 | 4030007050 | S.CER C1608 CH 1H 220J-T | B | 92.5/102.6 |
| C151 | 4030007070 | S.CER C1608 CH 1H 330J-T | B | 93.1/100.0 |
| C152 | 4030007080 | S.CER C1608 CH 1H 390J-T | B | 94.8/100.0 |
| C153 | 4030007120 | S.CER C1608 CH 1H 820J-T | B | 92.4/94.8 |
| C154 | 4030007050 | S.CER C1608 CH 1H 220J-T | B | 92.4/93.3 |
| C155 | 4030007080 | S.CER C1608 CH 1H 390J-T | B | 95.5/92.6 |
| C156 | 4030007070 | S.CER C1608 CH 1H 330J-T | B | 97.8/92.6 |
| C157 | 4030007130 | S.CER C1608 CH 1H 101J-T | B | 92.5/90.8 |
| C158 | 4030007050 | S.CER C1608 CH 1H 220J-T | B | 92.5/89.2 |
| C159 | 4030007170 | S.CER C1608 CH 1H 221J-T | B | 92.4/79.9 |
| C160 | 4030007170 | S.CER C1608 CH 1H 221J-T | B | 92.4/77.9 |
| C171 | 4030006880 | S.CER C1608 JB 1H 472K-T | B | 74.0/115.3 |
| C172 | 4030006880 | S.CER C1608 JB 1H 472K-T | B | 71.1/112.5 |
| C173 | 4030006880 | S.CER C1608 JB 1H 472K-T | B | 74.9/117.7 |
| C174 | 4030006880 | S.CER C1608 JB 1H 472K-T | B | 78.9/73.0 |
| C175 | 4030006880 | S.CER C1608 JB 1H 472K-T | B | 78.0/65.8 |
| C176 | 4030006880 | S.CER C1608 JB 1H 472K-T | B | 81.6/75.9 |
| C177 | 4030007170 | S.CER C1608 CH 1H 221J-T | B | 78.3/115.4 |
| C178 | 4030007110 | S.CER C1608 CH 1H 680J-T | B | 78.3/112.9 |
| C179 | 4030007090 | S.CER C1608 CH 1H 470J-T | B | 74.1/104.0 |
| C180 | 4030007090 | S.CER C1608 CH 1H 470J-T | B | 74.1/105.8 |
| C181 | 4030007070 | S.CER C1608 CH 1H 330J-T | B | 73.4/101.5 |
| C182 | 4030007070 | S.CER C1608 CH 1H 330J-T | B | 71.4/101.5 |
| C183 | 4030007120 | S.CER C1608 CH 1H 820J-T | B | 74.1/99.0 |
| C185 | 4030007070 | S.CER C1608 CH 1H 330J-T | B | 73.4/93.6 |
| C186 | 4030007070 | S.CER C1608 CH 1H 330J-T | B | 71.5/93.6 |
| C187 | 4030007090 | S.CER C1608 CH 1H 470J-T | B | 74.1/90.3 |
| C188 | 4030007090 | S.CER C1608 CH 1H 470J-T | B | 74.1/88.2 |
| C189 | 4030007170 | S.CER C1608 CH 1H 221J-T | B | 74.1/86.0 |
| C190 | 4030007110 | S.CER C1608 CH 1H 680J-T | B | 74.1/83.9 |
| C201 | 4030006880 | S.CER C1608 JB 1H 472K-T | B | 61.6/115.2 |
| C202 | 4030006880 | S.CER C1608 JB 1H 472K-T | B | 58.9/112.5 |
| C203 | 4030006880 | S.CER C1608 JB 1H 472K-T | B | 58.2/116.2 |
| C204 | 4030006880 | S.CER C1608 JB 1H 472K-T | B | 66.4/76.7 |
| C205 | 4030006880 | S.CER C1608 JB 1H 472K-T | B | 71.3/80.2 |
| C206 | 4030006880 | S.CER C1608 JB 1H 472K-T | B | 70.2/74.9 |
| C207 | 4030007160 | S.CER C1608 CH 1H 181J-T | B | 57.8/103.7 |
| C208 | 4030007090 | S.CER C1608 CH 1H 470J-T | B | 57.8/102.1 |
| C209 | 4030007090 | S.CER C1608 CH 1H 470J-T | B | 64.8/95.3 |
| C210 | 4030007040 | S.CER C1608 CH 1H 180J-T | B | 63.2/95.3 |
| C211 | 4030007030 | S.CER C1608 CH 1H 150J-T | B | 60.9/94.6 |
| C212 | 4030007050 | S.CER C1608 CH 1H 220J-T | B | 60.9/93.0 |
| C213 | 4030007090 | S.CER C1608 CH 1H 470J-T | B | 57.8/93.0 |
| C214 | 4030006990 | S.CER C1608 CH 1H 080D-T | B | 57.8/94.6 |
| C215 | 4030007050 | S.CER C1608 CH 1H 220J-T | B | 60.1/85.1 |

Eqv.= This component is equivalent to the REF No. component listed above, and may be substituted on parts orders and repairs.

M.=Mounted side (T: Mounted on the Top side, B: Mounted on the Bottom side)
S.=Surface mount

## [BPF UNIT]

| REF NO. | PARTS NO. | DESCRIPTION | M. | H/V LOCATION |
|---|---|---|---|---|
| C216 | 4030007030 | S.CER C1608 CH 1H 150J-T | B | 58.5/85.1 |
| C217 | 4030007090 | S.CER C1608 CH 1H 470J-T | B | 57.8/82.8 |
| C218 | 4030007040 | S.CER C1608 CH 1H 180J-T | B | 57.8/81.2 |
| C219 | 4030007160 | S.CER C1608 CH 1H 181J-T | B | 57.8/79.6 |
| C220 | 4030007090 | S.CER C1608 CH 1H 470J-T | B | 57.8/78.0 |
| C231 | 4030006880 | S.CER C1608 JB 1H 472K-T | B | 39.5/115.3 |
| C232 | 4030006880 | S.CER C1608 JB 1H 472K-T | B | 36.6/112.5 |
| C233 | 4030006880 | S.CER C1608 JB 1H 472K-T | B | 40.4/117.5 |
| C234 | 4030006880 | S.CER C1608 JB 1H 472K-T | B | 46.3/73.5 |
| C235 | 4030006880 | S.CER C1608 JB 1H 472K-T | B | 49.1/69.2 |
| C236 | 4030006880 | S.CER C1608 JB 1H 472K-T | B | 50.5/69.2 |
| C237 | 4030007140 | S.CER C1608 CH 1H 121J-T | B | 41.3/109.9 |
| C238 | 4030007040 | S.CER C1608 CH 1H 180J-T | B | 41.3/108.3 |
| C239 | 4030007070 | S.CER C1608 CH 1H 330J-T | B | 41.3/103.8 |
| C240 | 4030007040 | S.CER C1608 CH 1H 180J-T | B | 41.3/102.2 |
| C241 | 4030007010 | S.CER C1608 CH 1H 100D-T | B | 40.5/99.9 |
| C242 | 4030007070 | S.CER C1608 CH 1H 330J-T | B | 38.9/99.9 |
| C243 | 4030007090 | S.CER C1608 CH 1H 470J-T | B | 41.3/94.8 |
| C245 | 4030007070 | S.CER C1608 CH 1H 330J-T | B | 40.5/91.3 |
| C246 | 4030007010 | S.CER C1608 CH 1H 100D-T | B | 38.9/91.3 |
| C247 | 4030007070 | S.CER C1608 CH 1H 330J-T | B | 41.3/89.0 |
| C248 | 4030007040 | S.CER C1608 CH 1H 180J-T | B | 41.3/87.4 |
| C249 | 4030007140 | S.CER C1608 CH 1H 121J-T | B | 41.3/85.8 |
| C250 | 4030007040 | S.CER C1608 CH 1H 180J-T | B | 41.3/84.2 |
| C261 | 4030006880 | S.CER C1608 JB 1H 472K-T | B | 27.0/115.2 |
| C262 | 4030006880 | S.CER C1608 JB 1H 472K-T | B | 24.4/112.5 |
| C263 | 4030006880 | S.CER C1608 JB 1H 472K-T | B | 29.7/111.6 |
| C264 | 4030006880 | S.CER C1608 JB 1H 472K-T | T | 36.6/70.9 |
| C265 | 4030006880 | S.CER C1608 JB 1H 472K-T | T | 36.7/68.0 |
| C266 | 4030006880 | S.CER C1608 JB 1H 472K-T | B | 36.7/70.1 |
| C267 | 4030007130 | S.CER C1608 CH 1H 101J-T | B | 23.3/103.6 |
| C268 | 4030007030 | S.CER C1608 CH 1H 150J-T | B | 23.3/102.0 |
| C269 | 4030007050 | S.CER C1608 CH 1H 220J-T | B | 30.3/95.3 |
| C270 | 4030007020 | S.CER C1608 CH 1H 120J-T | B | 28.7/95.3 |
| C271 | 4030007050 | S.CER C1608 CH 1H 220J-T | B | 26.4/94.6 |
| C273 | 4030007050 | S.CER C1608 CH 1H 220J-T | B | 23.3/94.6 |
| C274 | 4030006980 | S.CER C1608 CH 1H 070D-T | B | 23.3/93.0 |
| C275 | 4030007050 | S.CER C1608 CH 1H 220J-T | B | 24.0/85.1 |
| C277 | 4030007050 | S.CER C1608 CH 1H 220J-T | B | 23.3/81.2 |
| C278 | 4030007020 | S.CER C1608 CH 1H 120J-T | B | 23.3/82.8 |
| C279 | 4030007130 | S.CER C1608 CH 1H 101J-T | B | 23.3/73.6 |
| C280 | 4030007030 | S.CER C1608 CH 1H 150J-T | B | 23.4/77.9 |
| C291 | 4030006880 | S.CER C1608 JB 1H 472K-T | B | 219.0/73.3 |
| C292 | 4030006880 | S.CER C1608 JB 1H 472K-T | B | 214.4/77.5 |
| C293 | 4030006880 | S.CER C1608 JB 1H 472K-T | B | 222.8/76.7 |
| C294 | 4030006880 | S.CER C1608 JB 1H 472K-T | B | 209.7/73.0 |
| C295 | 4030006880 | S.CER C1608 JB 1H 472K-T | B | 207.6/77.6 |
| C296 | 4030006880 | S.CER C1608 JB 1H 472K-T | B | 204.0/73.6 |
| C297 | 4030007150 | S.CER C1608 CH 1H 151J-T | T | 213.1/80.0 |
| C302 | 4030007030 | S.CER C1608 CH 1H 150J-T | T | 210.2/82.8 |
| C303 | 4030007130 | S.CER C1608 CH 1H 101J-T | T | 211.8/79.9 |
| C304 | 4030007040 | S.CER C1608 CH 1H 180J-T | T | 208.4/79.9 |
| C321 | 4030006880 | S.CER C1608 JB 1H 472K-T | T | 218.8/97.4 |
| C322 | 4030006880 | S.CER C1608 JB 1H 472K-T | T | 218.8/98.7 |
| C323 | 4030006880 | S.CER C1608 JB 1H 472K-T | B | 213.0/91.0 |
| C324 | 4030006880 | S.CER C1608 JB 1H 472K-T | B | 209.3/90.7 |
| C325 | 4030006880 | S.CER C1608 JB 1H 472K-T | T | 206.7/98.8 |
| C326 | 4030006880 | S.CER C1608 JB 1H 472K-T | T | 204.1/98.8 |
| C327 | 4030007100 | S.CER C1608 CH 1H 560J-T | T | 210.8/90.4 |
| C329 | 4030007110 | S.CER C1608 CH 1H 680J-T | T | 208.2/90.4 |
| C331 | 4030007100 | S.CER C1608 CH 1H 560J-T | T | 208.9/96.7 |
| C353 | 4030006880 | S.CER C1608 JB 1H 472K-T | B | 189.1/91.3 |
| C354 | 4030006880 | S.CER C1608 JB 1H 472K-T | B | 189.5/94.6 |
| C355 | 4030006880 | S.CER C1608 JB 1H 472K-T | T | 189.1/92.4 |
| C356 | 4030006880 | S.CER C1608 JB 1H 472K-T | B | 189.6/86.4 |
| C357 | 4030006880 | S.CER C1608 JB 1H 472K-T | T | 189.1/86.2 |
| C358 | 4030006880 | S.CER C1608 JB 1H 472K-T | B | 189.1/89.2 |
| C359 | 4030006880 | S.CER C1608 JB 1H 472K-T | T | 189.1/80.0 |
| C360 | 4030006880 | S.CER C1608 JB 1H 472K-T | B | 189.6/80.2 |
| C361 | 4030006880 | S.CER C1608 JB 1H 472K-T | B | 189.6/83.0 |
| C362 | 4030006880 | S.CER C1608 JB 1H 472K-T | T | 189.1/73.8 |
| C363 | 4030006880 | S.CER C1608 JB 1H 472K-T | B | 189.6/74.0 |
| C364 | 4030006880 | S.CER C1608 JB 1H 472K-T | B | 189.6/76.8 |
| C365 | 4030006880 | S.CER C1608 JB 1H 472K-T | T | 194.0/68.9 |
| C371 | 4030006880 | S.CER C1608 JB 1H 472K-T | T | 216.0/70.0 |
| C388 | 4030006880 | S.CER C1608 JB 1H 472K-T | B | 239.9/114.3 |
| C389 | 4030010210 | S.CER C3216 JB 1C 105M-T | B | 247.3/111.2 |
| C390 | 4030011600 | S.CER C1608 JB 1E 104K-T | T | 226.2/49.9 |
| C391 | 4030011600 | S.CER C1608 JB 1E 104K-T | B | 237.6/53.2 |
| C392 | 4030011600 | S.CER C1608 JB 1E 104K-T | T | 228.9/62.5 |
| C393 | 4030008860 | S.CER C1608 JB 1H 153K-T | B | 233.2/45.5 |
| C394 | 4030010210 | S.CER C3216 JB 1C 105M-T | B | 235.1/59.6 |
| C395 | 4030008860 | S.CER C1608 JB 1H 153K-T | B | 233.2/40.1 |
| C396 | 4030011600 | S.CER C1608 JB 1E 104K-T | B | 235.5/43.8 |
| C397 | 4550007500 | S.TAN F931D106MBABMA | B | 227.0/44.0 |
| Eqv. | 4550006470 | S.TAN TEESVB2 1D 106M8R | | |
| C398 | 4030011600 | S.CER C1608 JB 1E 104K-T | T | 5.4/102.8 |
| C399 | 4030011600 | S.CER C1608 JB 1E 104K-T | T | 5.3/77.8 |
| C401 | 4030006880 | S.CER C1608 JB 1H 472K-T | B | 223.9/95.5 |
| C402 | 4030010210 | S.CER C3216 JB 1C 105M-T | B | 234.1/107.2 |
| C403 | 4030009520 | S.CER C1608 CH 1H 020B-T | B | 234.0/109.3 |
| C404 | 4030007050 | S.CER C1608 CH 1H 220J-T | B | 234.0/110.9 |
| C405 | 4030010760 | S.CER C1608 CH 1H 331J-T | B | 236.2/113.4 |
| C498 | 4030011600 | S.CER C1608 JB 1E 104K-T | T | 5.3/60.4 |
| C499 | 4030011600 | S.CER C1608 JB 1E 104K-T | T | 6.2/39.7 |
| C501 | 4030006880 | S.CER C1608 JB 1H 472K-T | B | 184.9/22.0 |
| C502 | 4030006880 | S.CER C1608 JB 1H 472K-T | B | 181.6/22.0 |
| C503 | 4030006880 | S.CER C1608 JB 1H 472K-T | B | 183.9/31.7 |
| C504 | 4030006880 | S.CER C1608 JB 1H 472K-T | B | 183.7/54.7 |
| C505 | 4030006880 | S.CER C1608 JB 1H 472K-T | T | 185.3/47.1 |
| C506 | 4030006880 | S.CER C1608 JB 1H 472K-T | B | 184.1/47.2 |
| C507 | 4030017840 | S.CER C2012 CH 1H 222J-T | T | 183.0/35.4 |
| C508 | 4030017850 | S.CER C2012 CH 1H 272J-T | T | 182.9/37.7 |
| C509 | 4030017820 | S.CER C2012 CH 1H 122J-T | T | 182.9/39.5 |
| C510 | 4030017840 | S.CER C2012 CH 1H 222J-T | T | 182.9/44.3 |

## [BPF UNIT]

| REF NO. | PARTS NO. | DESCRIPTION | M. | H/V LOCATION |
|---|---|---|---|---|
| C531 | 4030006880 | S.CER C1608 JB 1H 472K-T | B | 165.7/5.6 |
| C532 | 4030006880 | S.CER C1608 JB 1H 472K-T | B | 165.2/2.3 |
| C533 | 4030006880 | S.CER C1608 JB 1H 472K-T | B | 164.5/9.0 |
| C534 | 4030006880 | S.CER C1608 JB 1H 472K-T | B | 164.0/54.7 |
| C535 | 4030006880 | S.CER C1608 JB 1H 472K-T | B | 167.7/49.6 |
| C536 | 4030006880 | S.CER C1608 JB 1H 472K-T | B | 169.4/53.7 |
| C537 | 4030017810 | S.CER C1608 CH 1H 102J-T | B | 168.7/20.1 |
| C538 | 4030017810 | S.CER C1608 CH 1H 102J-T | B | 168.7/22.0 |
| C539 | 4030010760 | S.CER C1608 CH 1H 331J-T | B | 168.4/24.5 |
| C540 | 4030007140 | S.CER C1608 CH 1H 121J-T | B | 168.4/26.7 |
| C541 | 4030007160 | S.CER C1608 CH 1H 181J-T | B | 165.4/27.7 |
| C542 | 4030007060 | S.CER C1608 CH 1H 270J-T | B | 162.6/27.7 |
| C543 | 4030010760 | S.CER C1608 CH 1H 331J-T | B | 168.4/28.8 |
| C544 | 4030007090 | S.CER C1608 CH 1H 470J-T | B | 168.4/30.7 |
| C545 | 4030007160 | S.CER C1608 CH 1H 181J-T | B | 162.9/34.2 |
| C546 | 4030007060 | S.CER C1608 CH 1H 270J-T | B | 164.9/34.1 |
| C547 | 4030010760 | S.CER C1608 CH 1H 331J-T | B | 168.1/35.1 |
| C548 | 4030007140 | S.CER C1608 CH 1H 121J-T | B | 168.1/36.7 |
| C549 | 4030017810 | S.CER C1608 CH 1H 102J-T | B | 170.4/43.4 |
| C550 | 4030017810 | S.CER C1608 CH 1H 102J-T | B | 170.4/45.9 |
| C561 | 4030006880 | S.CER C1608 JB 1H 472K-T | B | 153.0/8.0 |
| C562 | 4030006880 | S.CER C1608 JB 1H 472K-T | B | 153.0/11.9 |
| C563 | 4030006880 | S.CER C1608 JB 1H 472K-T | B | 152.0/10.0 |
| C564 | 4030006880 | S.CER C1608 JB 1H 472K-T | T | 161.4/46.4 |
| C565 | 4030006880 | S.CER C1608 JB 1H 472K-T | B | 162.2/38.9 |
| C566 | 4030006880 | S.CER C1608 JB 1H 472K-T | T | 165.5/42.4 |
| C567 | 4030017800 | S.CER C1608 CH 1H 561J-T | B | 148.0/17.4 |
| C568 | 4030010760 | S.CER C1608 CH 1H 331J-T | B | 148.6/15.2 |
| C569 | 4030010760 | S.CER C1608 CH 1H 331J-T | B | 144.7/25.8 |
| C570 | 4030007080 | S.CER C1608 CH 1H 390J-T | B | 144.7/27.4 |
| C571 | 4030007100 | S.CER C1608 CH 1H 560J-T | B | 141.7/28.2 |
| C572 | 4030010760 | S.CER C1608 CH 1H 331J-T | B | 139.8/28.2 |
| C573 | 4030010760 | S.CER C1608 CH 1H 331J-T | B | 144.3/34.2 |
| C574 | 4030007090 | S.CER C1608 CH 1H 470J-T | B | 144.3/35.8 |
| C575 | 4030010760 | S.CER C1608 CH 1H 331J-T | B | 141.5/38.7 |
| C576 | 4030007100 | S.CER C1608 CH 1H 560J-T | B | 139.8/38.7 |
| C577 | 4030010760 | S.CER C1608 CH 1H 331J-T | B | 144.4/43.3 |
| C578 | 4030007080 | S.CER C1608 CH 1H 390J-T | B | 144.4/40.9 |
| C579 | 4030017800 | S.CER C1608 CH 1H 561J-T | B | 149.7/45.2 |
| C580 | 4030010760 | S.CER C1608 CH 1H 331J-T | B | 147.9/45.2 |
| C591 | 4030006880 | S.CER C1608 JB 1H 472K-T | B | 140.3/5.1 |
| C592 | 4030006880 | S.CER C1608 JB 1H 472K-T | B | 142.2/5.1 |
| C593 | 4030006880 | S.CER C1608 JB 1H 472K-T | B | 133.1/8.6 |
| C594 | 4030006880 | S.CER C1608 JB 1H 472K-T | B | 140.4/54.3 |
| C595 | 4030006880 | S.CER C1608 JB 1H 472K-T | B | 148.6/52.7 |
| C596 | 4030006880 | S.CER C1608 JB 1H 472K-T | B | 146.0/53.4 |
| C597 | 4030017800 | S.CER C1608 CH 1H 561J-T | B | 126.8/3.2 |
| C598 | 4030011330 | S.CER C1608 CH 1H 391J-T | B | 126.8/5.5 |
| C599 | 4030007160 | S.CER C1608 CH 1H 181J-T | B | 126.8/15.1 |
| C600 | 4030007070 | S.CER C1608 CH 1H 330J-T | B | 126.8/17.3 |
| C601 | 4030007030 | S.CER C1608 CH 1H 150J-T | B | 129.7/18.2 |
| C602 | 4030007120 | S.CER C1608 CH 1H 820J-T | B | 131.7/18.2 |
| C603 | 4030007140 | S.CER C1608 CH 1H 121J-T | B | 126.8/20.6 |
| C604 | 4030007100 | S.CER C1608 CH 1H 560J-T | B | 126.8/18.9 |
| C605 | 4030007120 | S.CER C1608 CH 1H 820J-T | B | 131.5/26.9 |
| C606 | 4030007030 | S.CER C1608 CH 1H 150J-T | B | 129.7/26.9 |
| C607 | 4030007160 | S.CER C1608 CH 1H 181J-T | B | 127.4/29.1 |
| C608 | 4030007070 | S.CER C1608 CH 1H 330J-T | B | 127.4/31.4 |
| C609 | 4030017800 | S.CER C1608 CH 1H 561J-T | B | 127.4/33.3 |
| C610 | 4030011330 | S.CER C1608 CH 1H 391J-T | B | 127.4/35.6 |
| C621 | 4030006880 | S.CER C1608 JB 1H 472K-T | B | 118.5/4.8 |
| C622 | 4030006880 | S.CER C1608 JB 1H 472K-T | B | 121.3/4.1 |
| C623 | 4030006880 | S.CER C1608 JB 1H 472K-T | B | 113.9/8.3 |
| C624 | 4030006880 | S.CER C1608 JB 1H 472K-T | T | 110.3/54.1 |
| C625 | 4030006880 | S.CER C1608 JB 1H 472K-T | B | 107.5/51.5 |
| C626 | 4030006880 | S.CER C1608 JB 1H 472K-T | T | 109.0/52.6 |
| C627 | 4030010760 | S.CER C1608 CH 1H 331J-T | B | 109.3/17.9 |
| C628 | 4030007150 | S.CER C1608 CH 1H 151J-T | B | 109.3/19.8 |
| C629 | 4030007150 | S.CER C1608 CH 1H 151J-T | B | 109.3/21.7 |
| C630 | 4030007060 | S.CER C1608 CH 1H 270J-T | B | 109.3/23.7 |
| C631 | 4030007060 | S.CER C1608 CH 1H 270J-T | B | 105.3/25.9 |
| C632 | 4030007140 | S.CER C1608 CH 1H 121J-T | B | 107.0/25.9 |
| C633 | 4030007150 | S.CER C1608 CH 1H 151J-T | B | 109.3/34.0 |
| C634 | 4030007010 | S.CER C1608 CH 1H 100D-T | B | 109.3/31.8 |
| C635 | 4030007140 | S.CER C1608 CH 1H 121J-T | B | 108.6/37.9 |
| C636 | 4030007060 | S.CER C1608 CH 1H 270J-T | B | 106.0/37.9 |
| C637 | 4030007150 | S.CER C1608 CH 1H 151J-T | B | 109.3/40.4 |
| C638 | 4030007060 | S.CER C1608 CH 1H 270J-T | B | 109.3/42.3 |
| C639 | 4030010760 | S.CER C1608 CH 1H 331J-T | B | 110.3/46.5 |
| C640 | 4030007150 | S.CER C1608 CH 1H 151J-T | B | 110.3/48.5 |
| C651 | 4030006880 | S.CER C1608 JB 1H 472K-T | B | 105.2/7.9 |
| C652 | 4030006880 | S.CER C1608 JB 1H 472K-T | B | 105.2/4.1 |
| C653 | 4030006880 | S.CER C1608 JB 1H 472K-T | B | 103.1/10.2 |
| C654 | 4030006880 | S.CER C1608 JB 1H 472K-T | T | 90.5/54.2 |
| C655 | 4030006880 | S.CER C1608 JB 1H 472K-T | B | 92.2/46.9 |
| C656 | 4030006880 | S.CER C1608 JB 1H 472K-T | T | 93.5/49.6 |
| C657 | 4030007170 | S.CER C1608 CH 1H 221J-T | B | 92.3/6.1 |
| C658 | 4030007170 | S.CER C1608 CH 1H 221J-T | B | 92.3/4.5 |
| C659 | 4030007130 | S.CER C1608 CH 1H 101J-T | B | 92.5/14.9 |
| C660 | 4030007050 | S.CER C1608 CH 1H 220J-T | B | 92.5/17.0 |
| C661 | 4030007070 | S.CER C1608 CH 1H 330J-T | B | 95.3/19.6 |
| C662 | 4030007080 | S.CER C1608 CH 1H 390J-T | B | 93.3/19.6 |
| C663 | 4030007120 | S.CER C1608 CH 1H 820J-T | B | 92.6/27.6 |
| C664 | 4030007050 | S.CER C1608 CH 1H 220J-T | B | 92.6/25.4 |
| C665 | 4030007080 | S.CER C1608 CH 1H 390J-T | B | 95.8/28.4 |
| C666 | 4030007070 | S.CER C1608 CH 1H 330J-T | B | 97.6/28.4 |
| C667 | 4030007130 | S.CER C1608 CH 1H 101J-T | B | 92.3/30.0 |
| C668 | 4030007050 | S.CER C1608 CH 1H 220J-T | B | 92.3/31.8 |
| C669 | 4030007170 | S.CER C1608 CH 1H 221J-T | B | 92.3/33.6 |
| C670 | 4030007170 | S.CER C1608 CH 1H 221J-T | B | 92.3/35.7 |
| C681 | 4030006880 | S.CER C1608 JB 1H 472K-T | B | 74.4/5.2 |
| C682 | 4030006880 | S.CER C1608 JB 1H 472K-T | B | 77.1/3.2 |
| C683 | 4030006880 | S.CER C1608 JB 1H 472K-T | B | 71.6/8.1 |
| C684 | 4030006880 | S.CER C1608 JB 1H 472K-T | T | 79.0/54.2 |
| C685 | 4030006880 | S.CER C1608 JB 1H 472K-T | B | 79.1/46.9 |

Eqv.= This component is equivalent to the REF No. component listed above, and may be substituted on parts orders and repairs.

M.=Mounted side (T: Mounted on the Top side, B: Mounted on the Bottom side)
S.=Surface mount

## [BPF UNIT]

| REF NO. | PARTS NO. | DESCRIPTION | M. | H/V LOCATION |
|---|---|---|---|---|
| C686 | 4030006880 | S.CER C1608 JB 1H 472K-T | B | 81.6/44.1 |
| C687 | 4030007170 | S.CER C1608 CH 1H 221J-T | B | 75.6/11.0 |
| C688 | 4030007110 | S.CER C1608 CH 1H 680J-T | B | 75.6/13.4 |
| C689 | 4030007090 | S.CER C1608 CH 1H 470J-T | B | 70.9/15.3 |
| C690 | 4030007090 | S.CER C1608 CH 1H 470J-T | B | 73.0/15.3 |
| C691 | 4030007070 | S.CER C1608 CH 1H 330J-T | B | 71.0/18.8 |
| C692 | 4030007070 | S.CER C1608 CH 1H 330J-T | B | 73.1/18.8 |
| C693 | 4030007120 | S.CER C1608 CH 1H 820J-T | B | 75.8/21.2 |
| C695 | 4030007070 | S.CER C1608 CH 1H 330J-T | B | 72.7/27.1 |
| C696 | 4030007070 | S.CER C1608 CH 1H 330J-T | B | 71.0/27.1 |
| C697 | 4030007090 | S.CER C1608 CH 1H 470J-T | B | 75.6/29.6 |
| C698 | 4030007090 | S.CER C1608 CH 1H 470J-T | B | 75.6/31.7 |
| C699 | 4030007170 | S.CER C1608 CH 1H 221J-T | B | 75.7/35.9 |
| C700 | 4030007110 | S.CER C1608 CH 1H 680J-T | B | 75.6/34.0 |
| C711 | 4030006880 | S.CER C1608 JB 1H 472K-T | B | 62.0/5.3 |
| C712 | 4030006880 | S.CER C1608 JB 1H 472K-T | B | 63.1/7.9 |
| C713 | 4030006880 | S.CER C1608 JB 1H 472K-T | B | 58.7/8.4 |
| C714 | 4030006880 | S.CER C1608 JB 1H 472K-T | T | 68.2/54.2 |
| C715 | 4030006880 | S.CER C1608 JB 1H 472K-T | B | 68.5/42.8 |
| C716 | 4030006880 | S.CER C1608 JB 1H 472K-T | B | 70.1/46.3 |
| C717 | 4030007160 | S.CER C1608 CH 1H 181J-T | B | 57.7/20.2 |
| C718 | 4030007090 | S.CER C1608 CH 1H 470J-T | B | 57.7/17.6 |
| C719 | 4030007090 | S.CER C1608 CH 1H 470J-T | B | 57.5/23.2 |
| C720 | 4030007040 | S.CER C1608 CH 1H 180J-T | B | 57.5/25.3 |
| C721 | 4030007030 | S.CER C1608 CH 1H 150J-T | B | 61.1/27.1 |
| C722 | 4030007050 | S.CER C1608 CH 1H 220J-T | B | 63.2/27.1 |
| C723 | 4030007090 | S.CER C1608 CH 1H 470J-T | B | 57.7/33.8 |
| C724 | 4030006990 | S.CER C1608 CH 1H 080D-T | B | 57.7/31.6 |
| C725 | 4030007050 | S.CER C1608 CH 1H 220J-T | B | 63.3/37.6 |
| C726 | 4030007030 | S.CER C1608 CH 1H 150J-T | B | 61.3/37.6 |
| C727 | 4030007090 | S.CER C1608 CH 1H 470J-T | B | 57.8/38.4 |
| C728 | 4030007040 | S.CER C1608 CH 1H 180J-T | B | 57.8/40.6 |
| C729 | 4030007160 | S.CER C1608 CH 1H 181J-T | B | 57.8/46.3 |
| C730 | 4030007090 | S.CER C1608 CH 1H 470J-T | B | 57.8/48.7 |
| C741 | 4030006880 | S.CER C1608 JB 1H 472K-T | B | 40.8/5.5 |
| C742 | 4030006880 | S.CER C1608 JB 1H 472K-T | B | 42.8/3.5 |
| C743 | 4030006880 | S.CER C1608 JB 1H 472K-T | B | 37.0/8.1 |
| C744 | 4030006880 | S.CER C1608 JB 1H 472K-T | T | 46.3/54.2 |
| C745 | 4030006880 | S.CER C1608 JB 1H 472K-T | T | 46.3/46.6 |
| C746 | 4030006880 | S.CER C1608 JB 1H 472K-T | B | 49.5/50.5 |
| C747 | 4030007140 | S.CER C1608 CH 1H 121J-T | B | 41.3/13.3 |
| C748 | 4030007040 | S.CER C1608 CH 1H 180J-T | B | 41.3/10.8 |
| C749 | 4030007070 | S.CER C1608 CH 1H 330J-T | B | 41.0/18.4 |
| C750 | 4030007040 | S.CER C1608 CH 1H 180J-T | B | 41.1/16.5 |
| C751 | 4030007010 | S.CER C1608 CH 1H 100D-T | B | 35.3/17.1 |
| C752 | 4030007070 | S.CER C1608 CH 1H 330J-T | B | 37.5/17.1 |
| C753 | 4030007090 | S.CER C1608 CH 1H 470J-T | B | 41.1/20.4 |
| C755 | 4030007070 | S.CER C1608 CH 1H 330J-T | B | 35.5/25.6 |
| C756 | 4030007010 | S.CER C1608 CH 1H 100D-T | B | 37.5/25.6 |
| C757 | 4030007070 | S.CER C1608 CH 1H 330J-T | B | 41.1/27.6 |
| C758 | 4030007040 | S.CER C1608 CH 1H 180J-T | B | 41.1/29.5 |
| C759 | 4030007140 | S.CER C1608 CH 1H 121J-T | B | 41.3/32.6 |
| C760 | 4030007040 | S.CER C1608 CH 1H 180J-T | B | 41.3/35.0 |
| C771 | 4030006880 | S.CER C1608 JB 1H 472K-T | B | 27.6/5.6 |
| C772 | 4030006880 | S.CER C1608 JB 1H 472K-T | B | 29.2/8.6 |
| C773 | 4030006880 | S.CER C1608 JB 1H 472K-T | B | 23.6/8.3 |
| C774 | 4030006880 | S.CER C1608 JB 1H 472K-T | T | 35.9/54.4 |
| C775 | 4030006880 | S.CER C1608 JB 1H 472K-T | B | 34.2/44.6 |
| C776 | 4030006880 | S.CER C1608 JB 1H 472K-T | B | 36.4/46.1 |
| C777 | 4030007130 | S.CER C1608 CH 1H 101J-T | B | 24.2/20.0 |
| C778 | 4030007030 | S.CER C1608 CH 1H 150J-T | B | 24.2/17.9 |
| C779 | 4030007050 | S.CER C1608 CH 1H 220J-T | B | 24.0/23.7 |
| C780 | 4030007020 | S.CER C1608 CH 1H 120J-T | B | 24.0/25.6 |
| C781 | 4030007050 | S.CER C1608 CH 1H 220J-T | B | 27.6/26.5 |
| C783 | 4030007050 | S.CER C1608 CH 1H 220J-T | B | 24.2/32.4 |
| C784 | 4030006980 | S.CER C1608 CH 1H 070D-T | B | 24.2/34.4 |
| C785 | 4030007050 | S.CER C1608 CH 1H 220J-T | B | 27.8/37.7 |
| C787 | 4030007050 | S.CER C1608 CH 1H 220J-T | B | 24.5/38.5 |
| C788 | 4030007020 | S.CER C1608 CH 1H 120J-T | B | 24.5/40.8 |
| C789 | 4030007130 | S.CER C1608 CH 1H 101J-T | B | 24.1/46.8 |
| C790 | 4030007030 | S.CER C1608 CH 1H 150J-T | B | 24.1/49.1 |
| C801 | 4030006880 | S.CER C1608 JB 1H 472K-T | B | 218.8/46.3 |
| C802 | 4030006880 | S.CER C1608 JB 1H 472K-T | B | 223.0/44.4 |
| C803 | 4030006880 | S.CER C1608 JB 1H 472K-T | B | 211.6/44.7 |
| C804 | 4030006880 | S.CER C1608 JB 1H 472K-T | B | 208.8/27.5 |
| C805 | 4030006880 | S.CER C1608 JB 1H 472K-T | B | 208.3/43.7 |
| C806 | 4030006880 | S.CER C1608 JB 1H 472K-T | B | 203.8/46.1 |
| C813 | 4030007150 | S.CER C1608 CH 1H 151J-T | T | 212.7/41.2 |
| C816 | 4030007030 | S.CER C1608 CH 1H 150J-T | T | 213.8/39.1 |
| C820 | 4030007130 | S.CER C1608 CH 1H 101J-T | T | 211.4/39.8 |
| C821 | 4030007040 | S.CER C1608 CH 1H 180J-T | T | 208.1/39.8 |
| C831 | 4030006880 | S.CER C1608 JB 1H 472K-T | T | 218.9/22.1 |
| C832 | 4030006880 | S.CER C1608 JB 1H 472K-T | T | 218.9/20.8 |
| C833 | 4030006880 | S.CER C1608 JB 1H 472K-T | B | 214.5/27.5 |
| C834 | 4030006880 | S.CER C1608 JB 1H 472K-T | B | 209.8/46.9 |
| C835 | 4030006880 | S.CER C1608 JB 1H 472K-T | T | 201.0/20.7 |
| C836 | 4030006880 | S.CER C1608 JB 1H 472K-T | T | 203.7/20.7 |
| C837 | 4030007100 | S.CER C1608 CH 1H 560J-T | T | 212.0/30.0 |
| C839 | 4030007110 | S.CER C1608 CH 1H 680J-T | T | 207.9/30.0 |
| C841 | 4030007100 | S.CER C1608 CH 1H 560J-T | T | 208.7/25.1 |
| C853 | 4030006880 | S.CER C1608 JB 1H 472K-T | B | 188.8/25.1 |
| C854 | 4030006880 | S.CER C1608 JB 1H 472K-T | B | 189.6/27.6 |
| C855 | 4030006880 | S.CER C1608 JB 1H 472K-T | T | 189.1/25.3 |
| C856 | 4030006880 | S.CER C1608 JB 1H 472K-T | B | 189.6/30.5 |
| C857 | 4030006880 | S.CER C1608 JB 1H 472K-T | T | 189.1/30.5 |
| C858 | 4030006880 | S.CER C1608 JB 1H 472K-T | B | 189.6/33.8 |
| C859 | 4030006880 | S.CER C1608 JB 1H 472K-T | T | 189.1/36.7 |
| C860 | 4030006880 | S.CER C1608 JB 1H 472K-T | B | 189.6/37.2 |
| C861 | 4030006880 | S.CER C1608 JB 1H 472K-T | B | 189.6/40.0 |
| C862 | 4030006880 | S.CER C1608 JB 1H 472K-T | T | 189.1/42.9 |
| C863 | 4030006880 | S.CER C1608 JB 1H 472K-T | B | 189.6/42.9 |
| C864 | 4030006880 | S.CER C1608 JB 1H 472K-T | B | 189.6/45.8 |
| C865 | 4030006880 | S.CER C1608 JB 1H 472K-T | T | 194.0/50.2 |
| C876 | 4030006880 | S.CER C1608 JB 1H 472K-T | B | 241.3/19.5 |
| C878 | 4030010760 | S.CER C1608 CH 1H 331J-T | B | 245.1/17.9 |

## [BPF UNIT]

| REF NO. | PARTS NO. | DESCRIPTION | M. | H/V LOCATION |
|---|---|---|---|---|
| C879 | 4030007050 | S.CER C1608 CH 1H 220J-T | B | 245.1/19.5 |
| C880 | 4030009520 | S.CER C1608 CH 1H 020B-T | B | 247.9/19.5 |
| C881 | 4030010210 | S.CER C3216 JB 1C 105M-T | B | 244.0/34.0 |
| C900 | 4030006880 | S.CER C1608 JB 1H 472K-T | B | 215.6/99.6 |
| C901 | 4030005110 | S.CER C2012 JB 1E 473K-T | T | 15.1/26.8 |
| C902 | 4510008520 | S.ELE EEE1CA470SP | T | 12.3/21.7 |
| C903 | 4030005110 | S.CER C2012 JB 1E 473K-T | B | 12.3/12.9 |
| C904 | 4510009150 | S.ELE EEE1EA470WP | T | 12.3/13.4 |
| C905 | 4030006880 | S.CER C1608 JB 1H 472K-T | B | 244.8/94.1 |
| C906 | 4030006880 | S.CER C1608 JB 1H 472K-T | B | 244.8/91.3 |
| C907 | 4030006900 | S.CER C1608 JB 1H 103K-T | B | 213.9/106.3 |
| C908 | 4030011600 | S.CER C1608 JB 1E 104K-T | B | 212.8/115.6 |
| C909 | 4030006880 | S.CER C1608 JB 1H 472K-T | B | 218.8/113.6 |
| C910 | 4030006900 | S.CER C1608 JB 1H 103K-T | B | 215.5/117.9 |
| C911 | 4030006900 | S.CER C1608 JB 1H 103K-T | B | 210.7/106.3 |
| C912 | 4030006880 | S.CER C1608 JB 1H 472K-T | B | 201.9/99.6 |
| C914 | 4030006880 | S.CER C1608 JB 1H 472K-T | B | 194.7/99.4 |
| C915 | 4030006900 | S.CER C1608 JB 1H 103K-T | B | 192.6/110.6 |
| C916 | 4030006880 | S.CER C1608 JB 1H 472K-T | T | 200.3/118.3 |
| C917 | 4030006900 | S.CER C1608 JB 1H 103K-T | T | 197.8/117.6 |
| C918 | 4030006900 | S.CER C1608 JB 1H 103K-T | B | 187.3/106.3 |
| C919 | 4030006880 | S.CER C1608 JB 1H 472K-T | B | 180.0/100.0 |
| C921 | 4030006880 | S.CER C1608 JB 1H 472K-T | T | 201.6/118.3 |
| C922 | 4030011600 | S.CER C1608 JB 1E 104K-T | T | 208.5/117.4 |
| C923 | 4030011600 | S.CER C1608 JB 1E 104K-T | T | 212.3/117.4 |
| C924 | 4030011600 | S.CER C1608 JB 1E 104K-T | B | 192.9/116.4 |
| C925 | 4030011600 | S.CER C1608 JB 1E 104K-T | T | 187.7/117.4 |
| C926 | 4030011600 | S.CER C1608 JB 1E 104K-T | T | 191.6/117.5 |
| C927 | 4030006960 | S.CER C1608 CH 1H 050C-T | B | 209.4/113.7 |
| C928 | 4030006960 | S.CER C1608 CH 1H 050C-T | B | 187.5/114.2 |
| C950 | 4030006880 | S.CER C1608 JB 1H 472K-T | B | 206.3/4.6 |
| C951 | 4030006900 | S.CER C1608 JB 1H 103K-T | B | 215.7/17.8 |
| C952 | 4030011600 | S.CER C1608 JB 1E 104K-T | B | 211.9/20.0 |
| C953 | 4030006880 | S.CER C1608 JB 1H 472K-T | B | 205.3/2.8 |
| C954 | 4030006900 | S.CER C1608 JB 1H 103K-T | B | 218.6/2.5 |
| C955 | 4030006900 | S.CER C1608 JB 1H 103K-T | B | 208.6/11.4 |
| C956 | 4030006880 | S.CER C1608 JB 1H 472K-T | T | 203.5/2.3 |
| C958 | 4030006880 | S.CER C1608 JB 1H 472K-T | B | 190.0/4.9 |
| C959 | 4030006900 | S.CER C1608 JB 1H 103K-T | B | 195.2/16.5 |
| C960 | 4030006880 | S.CER C1608 JB 1H 472K-T | B | 196.3/2.3 |
| C961 | 4030006900 | S.CER C1608 JB 1H 103K-T | B | 202.2/4.0 |
| C962 | 4030006900 | S.CER C1608 JB 1H 103K-T | B | 184.1/16.6 |
| C963 | 4030006880 | S.CER C1608 JB 1H 472K-T | B | 181.0/3.9 |
| C965 | 4030006880 | S.CER C1608 JB 1H 472K-T | T | 208.4/3.9 |
| C967 | 4030011600 | S.CER C1608 JB 1E 104K-T | T | 209.0/21.4 |
| C968 | 4030011600 | S.CER C1608 JB 1E 104K-T | T | 213.0/21.4 |
| C969 | 4030011600 | S.CER C1608 JB 1E 104K-T | B | 191.6/19.9 |
| C970 | 4030011600 | S.CER C1608 JB 1E 104K-T | T | 187.9/21.4 |
| C971 | 4030011600 | S.CER C1608 JB 1E 104K-T | T | 193.0/19.8 |
| C972 | 4030006960 | S.CER C1608 CH 1H 050C-T | B | 208.3/19.3 |
| C973 | 4030006960 | S.CER C1608 CH 1H 050C-T | B | 187.7/19.3 |
| C974 | 4030006880 | S.CER C1608 JB 1H 472K-T | B | 235.8/11.5 |
| | | | | |
| RL1 | 6330001750 | REL FTR-B4CA012Z | | |
| RL2 | 6330001750 | REL FTR-B4CA012Z | | |
| RL21 | 6330001750 | REL FTR-B4CA012Z | | |
| RL22 | 6330001750 | REL FTR-B4CA012Z | | |
| RL51 | 6330001750 | REL FTR-B4CA012Z | | |
| RL52 | 6330001750 | REL FTR-B4CA012Z | | |
| RL81 | 6330001750 | REL FTR-B4CA012Z | | |
| RL82 | 6330001750 | REL FTR-B4CA012Z | | |
| RL111 | 6330001750 | REL FTR-B4CA012Z | | |
| RL112 | 6330001750 | REL FTR-B4CA012Z | | |
| RL141 | 6330001750 | REL FTR-B4CA012Z | | |
| RL142 | 6330001750 | REL FTR-B4CA012Z | | |
| RL171 | 6330001750 | REL FTR-B4CA012Z | | |
| RL172 | 6330001750 | REL FTR-B4CA012Z | | |
| RL201 | 6330001750 | REL FTR-B4CA012Z | | |
| RL202 | 6330001750 | REL FTR-B4CA012Z | | |
| RL231 | 6330001750 | REL FTR-B4CA012Z | | |
| RL232 | 6330001750 | REL FTR-B4CA012Z | | |
| RL261 | 6330001750 | REL FTR-B4CA012Z | | |
| RL262 | 6330001750 | REL FTR-B4CA012Z | | |
| RL291 | 6330001750 | REL FTR-B4CA012Z | | |
| RL292 | 6330001750 | REL FTR-B4CA012Z | | |
| RL321 | 6330001750 | REL FTR-B4CA012Z | | |
| RL322 | 6330001750 | REL FTR-B4CA012Z | | |
| RL351 | 6330001750 | REL FTR-B4CA012Z | | |
| RL352 | 6330001750 | REL FTR-B4CA012Z | | |
| RL353 | 6330001750 | REL FTR-B4CA012Z | | |
| RL354 | 6330001750 | REL FTR-B4CA012Z | | |
| RL355 | 6330001750 | REL FTR-B4CA012Z | | |
| RL371 | 6330001750 | REL FTR-B4CA012Z | | |
| RL381 | 6330001770 | REL SIP-1A-12Y | | |
| RL401 | 6330001770 | REL SIP-1A-12Y | | |
| RL402 | 6330001750 | REL FTR-B4CA012Z | | |
| RL501 | 6330001750 | REL FTR-B4CA012Z | | |
| RL502 | 6330001750 | REL FTR-B4CA012Z | | |
| RL531 | 6330001750 | REL FTR-B4CA012Z | | |
| RL532 | 6330001750 | REL FTR-B4CA012Z | | |
| RL561 | 6330001750 | REL FTR-B4CA012Z | | |
| RL562 | 6330001750 | REL FTR-B4CA012Z | | |
| RL591 | 6330001750 | REL FTR-B4CA012Z | | |
| RL592 | 6330001750 | REL FTR-B4CA012Z | | |
| RL621 | 6330001750 | REL FTR-B4CA012Z | | |
| RL622 | 6330001750 | REL FTR-B4CA012Z | | |
| RL651 | 6330001750 | REL FTR-B4CA012Z | | |
| RL652 | 6330001750 | REL FTR-B4CA012Z | | |
| RL681 | 6330001750 | REL FTR-B4CA012Z | | |
| RL682 | 6330001750 | REL FTR-B4CA012Z | | |
| RL711 | 6330001750 | REL FTR-B4CA012Z | | |
| RL712 | 6330001750 | REL FTR-B4CA012Z | | |
| RL741 | 6330001750 | REL FTR-B4CA012Z | | |
| RL742 | 6330001750 | REL FTR-B4CA012Z | | |

Eqv.= This component is equivalent to the REF No. component listed above, and may be substituted on parts orders and repairs.

M.=Mounted side (T: Mounted on the Top side, B: Mounted on the Bottom side)
S.=Surface mount

## [BPF UNIT]

| REF NO. | PARTS NO. | DESCRIPTION | | | M. | H/V LOCATION |
|---|---|---|---|---|---|---|
| RL771 | 6330001750 | REL | FTR-B4CA012Z | | | |
| RL772 | 6330001750 | REL | FTR-B4CA012Z | | | |
| RL801 | 6330001750 | REL | FTR-B4CA012Z | | | |
| RL802 | 6330001750 | REL | FTR-B4CA012Z | | | |
| RL831 | 6330001750 | REL | FTR-B4CA012Z | | | |
| RL832 | 6330001750 | REL | FTR-B4CA012Z | | | |
| RL851 | 6330001750 | REL | FTR-B4CA012Z | | | |
| RL852 | 6330001750 | REL | FTR-B4CA012Z | | | |
| RL853 | 6330001750 | REL | FTR-B4CA012Z | | | |
| RL854 | 6330001750 | REL | FTR-B4CA012Z | | | |
| RL855 | 6330001750 | REL | FTR-B4CA012Z | | | |
| RL871 | 6330001770 | REL | SIP-1A-12Y | | | |
| RL900 | 6330001750 | REL | FTR-B4CA012Z | | | |
| RL901 | 6330001750 | REL | FTR-B4CA012Z | | | |
| RL902 | 6330001750 | REL | FTR-B4CA012Z | | | |
| RL903 | 6330001750 | REL | FTR-B4CA012Z | | | |
| RL950 | 6330001750 | REL | FTR-B4CA012Z | | | |
| RL951 | 6330001750 | REL | FTR-B4CA012Z | | | |
| RL952 | 6330001750 | REL | FTR-B4CA012Z | | | |
| RL953 | 6330001750 | REL | FTR-B4CA012Z | | | |
| RL954 | 6330001750 | REL | FTR-B4CA012Z | | | |
| J1 | 6510020520 | S.CON | 52808-1291 | [USA] | T | 6.0/17.0 |
| | 6510020521 | S.CON | 52808-1271(1290) | [EUR] | | |
| | 6510020521 | S.CON | 52808-1271(1290) | [UK] | | |
| J101 | 6510028210 | CON | SJ050010 (TMP-J01X-V6) | | | |
| J102 | 6510028210 | CON | SJ050010 (TMP-J01X-V6) | | | |
| J103 | 6510023751 | CON | 01K1971-20 | | | |
| J104 | 6510023751 | CON | 01K1971-20 | | | |
| J105 | 6510023751 | CON | 01K1971-20 | | | |
| J106 | 6510028210 | CON | SJ050010 (TMP-J01X-V6) | | | |
| J107 | 6510028210 | CON | SJ050010 (TMP-J01X-V6) | | | |
| J108 | 6510028210 | CON | SJ050010 (TMP-J01X-V6) | | | |
| J504 | 6510023751 | CON | 01K1971-20 | | | |
| J505 | 6510023751 | CON | 01K1971-20 | | | |
| J506 | 6510028210 | CON | SJ050010 (TMP-J01X-V6) | | | |
| J601 | 6510028210 | CON | SJ050010 (TMP-J01X-V6) | | | |
| J602 | 6510028210 | CON | SJ050010 (TMP-J01X-V6) | | | |
| EP900 | 6910012350 | S.BEA | MMZ1608Y 102BT | | B | 218.9/98.9 |
| EP901 | 6910012350 | S.BEA | MMZ1608Y 102BT | | B | 204.2/100.4 |
| EP902 | 6910012350 | S.BEA | MMZ1608Y 102BT | | B | 197.2/98.7 |
| EP903 | 6910012350 | S.BEA | MMZ1608Y 102BT | | B | 189.7/100.1 |
| EP950 | 6910012350 | S.BEA | MMZ1608Y 102BT | | B | 208.8/3.5 |
| EP951 | 6910012350 | S.BEA | MMZ1608Y 102BT | | T | 205.4/3.2 |
| EP952 | 6910012350 | S.BEA | MMZ1608Y 102BT | | B | 193.3/3.0 |
| EP953 | 6910012350 | S.BEA | MMZ1608Y 102BT | | B | 184.6/3.8 |

## [MAIN UNIT]

| REF NO. | PARTS NO. | DESCRIPTION | | M. | H/V LOCATION |
|---|---|---|---|---|---|
| IC1 | 1110003870 | S.IC | NJM2058M-TE1-#ZZZB | T | 226.0/83.5 |
| IC2 | 1110001901 | S.IC | UPC4570G2-E1-A | T | 187.0/68.8 |
| IC3 | 1130005641 | S.IC | TC4W53F(TE12LF) | T | 191.1/75.2 |
| IC4 | 1110006300 | S.IC | NJM2172V-TE1-#ZZZB | T | 186.6/85.7 |
| IC5 | 1130005641 | S.IC | TC4W53F(TE12LF) | T | 184.3/75.2 |
| IC50 | 1190001930 | S.IC | PS7122AL-1A-E3 | B | 114.4/109.1 |
| IC60 | 1110003870 | S.IC | NJM2058M-TE1-#ZZZB | B | 116.1/87.4 |
| IC61 | 1110003870 | S.IC | NJM2058M-TE1-#ZZZB | B | 129.6/94.8 |
| IC100 | 1130005641 | S.IC | TC4W53F(TE12LF) | T | 211.8/91.0 |
| IC101 | 1130005641 | S.IC | TC4W53F(TE12LF) | T | 205.0/91.0 |
| IC102 | 1110001901 | S.IC | UPC4570G2-E1-A | T | 209.7/68.5 |
| IC104 | 1110001901 | S.IC | UPC4570G2-E1-A | T | 209.8/43.4 |
| IC105 | 1110006300 | S.IC | NJM2172V-TE1-#ZZZB | T | 220.4/58.4 |
| IC140 | 1110006141 | IC | LA4485-E | | |
| IC180 | 1110006300 | S.IC | NJM2172V-TE1-#ZZZB | T | 187.0/57.6 |
| IC181 | 1130005641 | S.IC | TC4W53F(TE12LF) | T | 186.9/40.3 |
| IC182 | 1110006160 | S.IC | TPA6111A2DGN | T | 186.8/35.8 |
| IC191 | 1130005641 | S.IC | TC4W53F(TE12LF) | T | 193.3/30.0 |
| IC192 | 1130005641 | S.IC | TC4W53F(TE12LF) | T | 180.7/30.2 |
| IC201 | 1130005641 | S.IC | TC4W53F(TE12LF) | T | 147.7/71.6 |
| IC210 | 1110006300 | S.IC | NJM2172V-TE1-#ZZZB | T | 160.5/90.1 |
| IC230 | 1110001901 | S.IC | UPC4570G2-E1-A | T | 68.3/22.2 |
| IC250 | 1130011530 | S.IC | CD74HC4094M96 | T | 137.4/32.2 |
| IC251 | 1160000132 | S.IC | TD62783AFG(OSEL) | T | 125.7/34.0 |
| IC260 | 1130011530 | S.IC | CD74HC4094M96 | T | 137.4/46.6 |
| IC261 | 1160000132 | S.IC | TD62783AFG(OSEL) | T | 125.7/48.4 |
| IC290 | 1130011530 | S.IC | CD74HC4094M96 | T | 149.4/35.7 |
| IC291 | 1160000132 | S.IC | TD62783AFG(OSEL) | T | 161.1/34.0 |
| IC310 | 1130011530 | S.IC | CD74HC4094M96 | T | 149.4/50.1 |
| IC311 | 1160000132 | S.IC | TD62783AFG(OSEL) | T | 161.1/48.4 |
| IC330 | 1130012000 | S.IC | M62352AGP C60Q | T | 150.4/61.0 |
| IC331 | 1130012000 | S.IC | M62352AGP C60Q | T | 161.1/61.1 |
| IC450 | 1180002650 | S.REG | SI-3012KS-TL | B | 212.6/31.3 |
| IC451 | 1180002650 | S.REG | SI-3012KS-TL | B | 160.0/15.2 |
| IC452 | 1180002650 | S.REG | SI-3012KS-TL | B | 93.6/51.5 |
| IC460 | 1130005641 | S.IC | TC4W53F(TE12LF) | T | 147.7/80.1 |
| IC490 | 1130005641 | S.IC | TC4W53F(TE12LF) | B | 163.4/61.6 |
| IC491 | 1110003870 | S.IC | NJM2058M-TE1-#ZZZB | B | 236.2/21.9 |
| IC495 | 1130011990 | S.IC | SN74LVC1G08DCKR | T | 14.6/122.5 |
| IC501 | 1110006100 | S.IC | NJM5534MD-TE1-#ZZZB | T | 22.6/66.4 |
| IC502 | 1110006100 | S.IC | NJM5534MD-TE1-#ZZZB | T | 22.6/78.5 |
| IC503 | 1110005461 | S.IC | TA4107F(TE12LF) | T | 23.2/91.9 |
| IC550 | 1180001771 | S.IC | TA79L05F(TE12LF) | T | 125.5/103.1 |
| IC820 | 1110006131 | S.IC | UPC4094G2-E1-A | T | 83.5/59.3 |
| IC821 | 1110006300 | S.IC | NJM2172V-TE1-#ZZZB | T | 160.5/74.8 |
| Q1 | 1590001050 | S.TRA | DTC114TUA T106 | B | 217.0/105.3 |
| Q2 | 1590001050 | S.TRA | DTC114TUA T106 | B | 174.9/102.8 |
| Q3 | 1530002060 | S.TRA | 2SC4081 T106 R | B | 161.8/96.7 |
| Q4 | 1530002060 | S.TRA | 2SC4081 T106 R | B | 172.7/98.0 |
| Q5 | 1590001330 | S.TRA | DTA114EUA T106 | B | 167.1/92.0 |
| Q6 | 1530004210 | S.TRA | DSC7004S0L | B | 166.4/102.1 |
| Q7 | 1530002060 | S.TRA | 2SC4081 T106 R | B | 147.8/110.4 |
| Q8 | 1530002060 | S.TRA | 2SC4081 T106 R | T | 222.2/99.7 |
| Q9 | 1530002060 | S.TRA | 2SC4081 T106 R | T | 179.3/101.0 |
| Q50 | 1590001050 | S.TRA | DTC114TUA T106 | B | 119.0/96.6 |
| Q51 | 1590001050 | S.TRA | DTC114TUA T106 | B | 118.6/100.4 |
| Q52 | 1530002060 | S.TRA | 2SC4081 T106 R | T | 83.5/107.6 |
| Q60 | 1590002710 | S.TRA | UMH11NTN | T | 118.7/87.6 |
| Q61 | 1590002150 | S.TRA | DTC144TE TL | T | 117.8/80.2 |
| Q62 | 1510000510 | S.TRA | 2SA1576A T106R | T | 123.1/93.8 |
| Q63 | 1590001050 | S.TRA | DTC114TUA T106 | T | 120.3/80.0 |
| Q64 | 1590004050 | S.TRA | LDTA144EET1G <SLVJ> | T | 120.3/82.3 |
| Q100 | 1590004920 | S.FET | 2SJ145 D | T | 214.2/79.1 |
| Q101 | 1590004920 | S.FET | 2SJ145 D | T | 204.6/79.1 |
| Q131 | 1560001790 | S.FET | LN2306LT1G <SLVJ> | T | 228.6/70.9 |
| Q132 | 1560001790 | S.FET | LN2306LT1G <SLVJ> | T | 233.4/47.7 |
| Q140 | 1540000471 | S.TRA | 2SD1801S-TL-E | T | 241.8/37.3 |
| Q141 | 1590000680 | S.TRA | DTC114EUA T106 | B | 247.8/92.4 |
| Q142 | 1590000680 | S.TRA | DTC114EUA T106 | B | 239.9/92.4 |
| Q143 | 1590001050 | S.TRA | DTC114TUA T106 | T | 255.3/55.4 |
| Q351 | 1560001260 | S.FET | 2SK3018 T106 | T | 129.9/85.1 |
| Q352 | 1530002060 | S.TRA | 2SC4081 T106 R | T | 132.7/85.1 |
| Q474 | 1510000510 | S.TRA | 2SA1576A T106R | T | 132.4/77.2 |
| Q476 | 1590001050 | S.TRA | DTC114TUA T106 | T | 129.4/77.1 |
| Q490 | 1590000680 | S.TRA | DTC114EUA T106 | B | 232.2/4.5 |
| Q491 | 1520000460 | S.TRA | 2SB1132 T100 R | B | 224.3/4.3 |
| Q501 | 1580000751 | S.FET | 3SK294(TE85LF) | B | 26.9/91.8 |
| Q502 | 1590000680 | S.TRA | DTC114EUA T106 | T | 47.1/79.4 |
| Q503 | 1590002710 | S.TRA | UMH11NTN | T | 47.3/75.9 |
| Q504 | 1560000561 | S.FET | 2SK882-GR(TE85LF) | B | 49.3/91.2 |
| Q506 | 1560000561 | S.FET | 2SK882-GR(TE85LF) | B | 102.7/82.6 |
| Q507 | 1530003151 | S.TRA | 2SC4673D-TD-E | T | 103.9/65.5 |
| Q508 | 1530003842 | S.TRA | 2SC5501A-4-TR-E | T | 58.8/68.9 |
| Q801 | 1530003852 | S.TRA | 2SC5551A-F-TD-E | T | 43.1/18.2 |
| Q802 | 1520000860 | S.TRA | 2SB1302S-TD-E | B | 89.9/83.7 |
| Q803 | 1590000680 | S.TRA | DTC114EUA T106 | B | 83.7/84.8 |
| Q804 | 1590002710 | S.TRA | UMH11NTN | T | 33.9/20.3 |
| Q805 | 1590000680 | S.TRA | DTC114EUA T106 | T | 30.9/21.6 |
| Q806 | 1530002060 | S.TRA | 2SC4081 T106 R | T | 35.5/73.8 |
| Q808 | 1590001330 | S.TRA | DTA114EUA T106 | T | 45.6/70.2 |
| Q809 | 1590000680 | S.TRA | DTC114EUA T106 | T | 48.7/70.2 |
| Q810 | 1530002060 | S.TRA | 2SC4081 T106 R | T | 231.4/34.2 |
| D1 | 1750000550 | S.DIO | 1SS355 TE-17 | B | 162.9/104.2 |
| D2 | 1750000550 | S.DIO | 1SS355 TE-17 | B | 170.6/104.2 |
| D3 | 1790001750 | S.DIO | DSM3MA4 | B | 65.5/122.7 |
| D4 | 1790001750 | S.DIO | DSM3MA4 | B | 65.5/113.6 |
| D50 | 1750000550 | S.DIO | 1SS355 TE-17 | B | 114.5/100.6 |
| D51 | 1790001670 | S.DIO | RB706F-40T106 | T | 90.8/112.8 |
| D52 | 1750000550 | S.DIO | 1SS355 TE-17 | T | 88.4/112.8 |
| D60 | 1750000550 | S.DIO | 1SS355 TE-17 | B | 126.8/86.8 |
| D61 | 1750000550 | S.DIO | 1SS355 TE-17 | B | 126.6/83.4 |

Eqv.= This component is equivalent to the REF No. component listed above, and may be substituted on parts orders and repairs.

M.=Mounted side (T: Mounted on the Top side, B: Mounted on the Bottom side)
S.=Surface mount

## [MAIN UNIT]

| REF NO. | PARTS NO. | DESCRIPTION | M. | H/V LOCATION |
|---|---|---|---|---|
| D62 | 1750000550 | S.DIO 1SS355 TE-17 | B | 120.6/77.6 |
| D63 | 1750000550 | S.DIO 1SS355 TE-17 | B | 116.5/93.6 |
| D64 | 1790001241 | S.DIO MA2S7280GL | B | 108.1/78.3 |
| D65 | 1750000550 | S.DIO 1SS355 TE-17 | B | 123.1/100.1 |
| D66 | 1750000550 | S.DIO 1SS355 TE-17 | B | 134.3/89.4 |
| D67 | 1730002341 | S.ZEN MAZ8047GML | B | 122.8/95.8 |
| D140 | 1750000550 | S.DIO 1SS355 TE-17 | B | 247.8/95.1 |
| D141 | 1750000550 | S.DIO 1SS355 TE-17 | B | 239.9/95.1 |
| D241 | 1730002281 | S.ZEN MAZ8091GML | T | 231.2/32.0 |
| D351 | 1790001251 | S.DIO MA2S1110GL | T | 129.8/83.2 |
| D450 | 1710000840 | S.DIO 1SR154-400 TE25 | B | 218.9/28.0 |
| D451 | 1710000840 | S.DIO 1SR154-400 TE25 | B | 153.4/16.0 |
| D452 | 1710000840 | S.DIO 1SR154-400 TE25 | B | 93.6/58.0 |
| D490 | 1790000620 | S.DIO MA77(TX) | B | 237.5/5.4 |
| D501 | 1790000620 | S.DIO MA77(TX) | B | 34.3/94.1 |
| D502 | 1790000620 | S.DIO MA77(TX) | B | 34.3/91.8 |
| D503 | 1790000620 | S.DIO MA77(TX) | B | 46.6/91.4 |
| D504 | 1790000620 | S.DIO MA77(TX) | B | 46.7/85.3 |
| D505 | 1750000431 | S.DIO HSB88WSTR-E | T | 70.2/90.8 |
| D506 | 1750000431 | S.DIO HSB88WSTR-E | T | 84.3/69.4 |
| D601 | 1790000620 | S.DIO MA77(TX) | B | 34.7/54.0 |
| D602 | 1790000620 | S.DIO MA77(TX) | B | 34.7/33.0 |
| D603 | 1790000620 | S.DIO MA77(TX) | B | 45.5/54.0 |
| D604 | 1790000620 | S.DIO MA77(TX) | B | 45.5/33.0 |
| D605 | 1790000620 | S.DIO MA77(TX) | B | 56.3/54.0 |
| D606 | 1790000620 | S.DIO MA77(TX) | B | 56.3/33.0 |
| D607 | 1790000620 | S.DIO MA77(TX) | B | 67.1/54.0 |
| D608 | 1790000620 | S.DIO MA77(TX) | B | 67.1/33.0 |
| D609 | 1790000620 | S.DIO MA77(TX) | B | 78.0/54.0 |
| D610 | 1790000620 | S.DIO MA77(TX) | B | 78.0/33.0 |
| D611 | 1790000620 | S.DIO MA77(TX) | T | 40.8/54.0 |
| D612 | 1790000620 | S.DIO MA77(TX) | T | 40.8/33.0 |
| D613 | 1790000620 | S.DIO MA77(TX) | T | 48.8/54.0 |
| D614 | 1790000620 | S.DIO MA77(TX) | T | 49.8/33.0 |
| D615 | 1790000620 | S.DIO MA77(TX) | T | 58.9/54.0 |
| D616 | 1790000620 | S.DIO MA77(TX) | T | 58.8/33.0 |
| D617 | 1790000620 | S.DIO MA77(TX) | T | 67.8/54.0 |
| D618 | 1790000620 | S.DIO MA77(TX) | T | 67.8/33.0 |
| D619 | 1790000620 | S.DIO MA77(TX) | T | 76.8/54.0 |
| D620 | 1790000620 | S.DIO MA77(TX) | T | 76.8/33.0 |
| D801 | 1790000620 | S.DIO MA77(TX) | T | 36.5/29.9 |
| D802 | 1750000581 | S.DIO 1SV307(TPH3F) | T | 34.7/29.9 |
| D806 | 1790000620 | S.DIO MA77(TX) | B | 84.2/76.6 |
| D820 | 1750000581 | S.DIO 1SV307(TPH3F) | T | 86.0/33.0 |
| | | | | |
| FI501 | 2020001070 | CER CFWLA455KDFA-B0 (CFWS455D) | | |
| FI502 | 2020001510 | CER CFWLA455KJFA-B0 (CFWS455IT) | | |
| FI503 | 2010002580 | S.FIL DSF753SB 64.455 MHz (FL-348) | T | 93.4/90.8 |
| | | | | |
| L1 | 6200003261 | S.COI NLV32T-101J | T | 186.7/100.6 |
| L2 | 6200003261 | S.COI NLV32T-101J | B | 183.8/77.2 |
| L3 | 6200003950 | S.COI HF50ACC 322513-T | T | 179.2/88.5 |
| L4 | 6200003261 | S.COI NLV32T-101J | T | 179.2/80.3 |
| L5 | 6200003261 | S.COI NLV32T-101J | T | 178.2/84.3 |
| L6 | 6200003261 | S.COI NLV32T-101J | T | 178.1/76.3 |
| L7 | 6200003950 | S.COI HF50ACC 322513-T | T | 208.2/109.6 |
| L8 | 6200003261 | S.COI NLV32T-101J | B | 200.4/110.3 |
| L9 | 6200003950 | S.COI HF50ACC 322513-T | B | 193.4/110.0 |
| L10 | 6200003261 | S.COI NLV32T-101J | B | 196.9/110.3 |
| L11 | 6200003261 | S.COI NLV32T-101J | B | 169.7/110.3 |
| L12 | 6200003261 | S.COI NLV32T-101J | B | 180.2/110.3 |
| L13 | 6200003950 | S.COI HF50ACC 322513-T | B | 162.7/110.3 |
| L14 | 6200003261 | S.COI NLV32T-101J | T | 176.7/109.7 |
| L15 | 6200003261 | S.COI NLV32T-101J | B | 183.7/110.3 |
| L16 | 6200003261 | S.COI NLV32T-101J | B | 173.2/110.3 |
| L17 | 6200003950 | S.COI HF50ACC 322513-T | T | 166.2/109.2 |
| L18 | 6200003261 | S.COI NLV32T-101J | B | 158.4/110.3 |
| L19 | 6200003950 | S.COI HF50ACC 322513-T | B | 151.4/110.0 |
| L20 | 6200003261 | S.COI NLV32T-101J | B | 154.9/110.3 |
| L21 | 6200003950 | S.COI HF50ACC 322513-T | B | 166.0/107.5 |
| L22 | 6200003950 | S.COI HF50ACC 322513-T | B | 163.0/107.5 |
| L50 | 6200003261 | S.COI NLV32T-101J | B | 139.6/122.6 |
| L51 | 6200003590 | S.COI EXCCL3225U1 | B | 154.3/111.3 |
| L52 | 6200003261 | S.COI NLV32T-101J | B | 151.3/107.3 |
| L54 | 6200003261 | S.COI NLV32T-101J | T | 50.8/64.3 |
| L55 | 6200003261 | S.COI NLV32T-101J | B | 119.3/33.6 |
| L56 | 6200003590 | S.COI EXCCL3225U1 | T | 116.2/44.6 |
| L140 | 6200003261 | S.COI NLV32T-101J | T | 219.7/48.1 |
| L141 | 2040000490 | COI EXC-ELDR25C | | |
| L142 | 2040000490 | COI EXC-ELDR25C | | |
| L143 | 2040000490 | COI EXC-ELDR25C | | |
| L180 | 6200003261 | S.COI NLV32T-101J | T | 186.9/44.6 |
| L181 | 6200003261 | S.COI NLV32T-101J | T | 181.2/40.1 |
| L201 | 6200003261 | S.COI NLV32T-101J | B | 61.9/112.1 |
| L210 | 6200003261 | S.COI NLV32T-101J | T | 156.1/85.2 |
| L250 | 6200003590 | S.COI EXCCL3225U1 | T | 134.6/55.7 |
| L290 | 6200003590 | S.COI EXCCL3225U1 | T | 152.0/28.2 |
| L330 | 6200001831 | S.COI NLV32T-100J | B | 161.4/68.9 |
| L331 | 6200001831 | S.COI NLV32T-100J | B | 164.8/68.9 |
| L340 | 6200003950 | S.COI HF50ACC 322513-T | B | 201.7/96.1 |
| L341 | 6200003950 | S.COI HF50ACC 322513-T | B | 195.5/96.1 |
| L360 | 6200003950 | S.COI HF50ACC 322513-T | B | 149.7/96.1 |
| L361 | 6200003950 | S.COI HF50ACC 322513-T | B | 143.5/96.1 |
| L380 | 6200003950 | S.COI HF50ACC 322513-T | B | 28.5/41.9 |
| L381 | 6200003950 | S.COI HF50ACC 322513-T | B | 28.5/48.1 |
| L400 | 6200003950 | S.COI HF50ACC 322513-T | T | 238.3/10.9 |
| L401 | 6200003950 | S.COI HF50ACC 322513-T | B | 234.1/11.3 |
| L402 | 6200003950 | S.COI HF50ACC 322513-T | B | 237.3/11.3 |
| L405 | 6200003950 | S.COI HF50ACC 322513-T | T | 40.3/11.3 |
| L406 | 6200003950 | S.COI HF50ACC 322513-T | T | 34.3/11.3 |
| L407 | 6200003950 | S.COI HF50ACC 322513-T | T | 37.3/11.3 |
| L410 | 6200003590 | S.COI EXCCL3225U1 | T | 11.0/41.0 |
| L411 | 6200003950 | S.COI HF50ACC 322513-T | B | 11.0/39.6 |

## [MAIN UNIT]

| REF NO. | PARTS NO. | DESCRIPTION | M. | H/V LOCATION |
|---|---|---|---|---|
| L412 | 6200003590 | S.COI EXCCL3225U1 | T | 11.0/38.0 |
| L413 | 6200003950 | S.COI HF50ACC 322513-T | B | 11.0/36.4 |
| L418 | 6200003950 | S.COI HF50ACC 322513-T | B | 11.1/97.2 |
| L435 | 6200003950 | S.COI HF50ACC 322513-T | B | 6.7/76.7 |
| L440 | 6200003950 | S.COI HF50ACC 322513-T | T | 164.1/12.7 |
| L441 | 6200003950 | S.COI HF50ACC 322513-T | T | 161.1/12.7 |
| L450 | 6200003590 | S.COI EXCCL3225U1 | B | 251.2/16.8 |
| L451 | 6170000150 | COI LW-16 | | |
| L452 | 6200003590 | S.COI EXCCL3225U1 | T | 250.2/25.4 |
| L453 | 6200003590 | S.COI EXCCL3225U1 | T | 250.2/28.4 |
| L454 | 6200009790 | S.COI BLM31PG121SN1 | B | 250.6/30.2 |
| L455 | 6200009790 | S.COI BLM31PG121SN1 | B | 250.6/32.5 |
| L456 | 6200003590 | S.COI EXCCL3225U1 | T | 250.4/39.6 |
| L480 | 6200003950 | S.COI HF50ACC 322513-T | B | 220.6/24.0 |
| L481 | 6200003950 | S.COI HF50ACC 322513-T | B | 149.8/17.1 |
| L482 | 6200003950 | S.COI HF50ACC 322513-T | B | 94.1/61.2 |
| L495 | 6200003191 | S.COI NLV32T-470J | B | 24.2/118.0 |
| L496 | 6200003191 | S.COI NLV32T-470J | B | 9.2/117.4 |
| L501 | 6200003261 | S.COI NLV32T-101J | T | 24.4/101.3 |
| L502 | 6200003261 | S.COI NLV32T-101J | T | 21.4/97.1 |
| L503 | 6200003261 | S.COI NLV32T-101J | T | 24.4/97.1 |
| L504 | 6200003520 | S.COI ELJFB 102K-F | T | 30.6/92.2 |
| L505 | 6150005420 | COI LS-554 | | |
| L507 | 6140003530 | COI LR-395 | | |
| L508 | 6140003210 | S.COI LR-358 | T | 75.9/90.8 |
| L509 | 6140003770 | S.COI LR-414 4KBL (STP-01435) | T | 85.2/90.8 |
| L510 | 6140003770 | S.COI LR-414 4KBL (STP-01435) | T | 101.6/90.8 |
| L511 | 6200003031 | S.COI NLV32T-R47J | B | 101.9/85.8 |
| L512 | 6150004280 | COI LS-484B (C-14927) | | |
| L513 | 6140002551 | S.COI #617DB-1919=P3 | T | 90.6/69.4 |
| L514 | 6140002551 | S.COI #617DB-1919=P3 | T | 78.0/69.4 |
| L515 | 6200003001 | S.COI NLV32T-R22J | T | 111.3/65.7 |
| L516 | 6200003021 | S.COI NLV32T-R33J | T | 102.8/71.4 |
| L517 | 6200001831 | S.COI NLV32T-100J | T | 99.4/73.5 |
| L518 | 6200010720 | S.COI C2520C-56NG-A | T | 71.2/69.1 |
| L519 | 6200010860 | S.COI C2520C-R10G-A (0.1U) | T | 67.6/70.3 |
| L521 | 6140003900 | COI LR-489 | | |
| L522 | 6140003890 | COI LR-488 | | |
| L523 | 6200010381 | S.COI ELJRE R15JFA | B | 90.6/76.8 |
| L524 | 6180002971 | S.COI NLV32T-068J | B | 102.6/63.5 |
| L525 | 6180002971 | S.COI NLV32T-068J | B | 100.7/67.3 |
| L526 | 6180002971 | S.COI NLV32T-068J | B | 97.0/67.2 |
| L527 | 6200010660 | S.COI C2520C-R15G-A (0.15U) | T | 64.0/71.7 |
| L528 | 6200003261 | S.COI NLV32T-101J | T | 33.6/96.3 |
| L529 | 6200010381 | S.COI ELJRE R15JFA | B | 93.2/78.1 |
| L601 | 6200003101 | S.COI NLV32T-3R9J | B | 38.2/53.1 |
| L602 | 6200003131 | S.COI NLV32T-120J | B | 34.7/49.6 |
| L603 | 6200003131 | S.COI NLV32T-120J | B | 38.9/43.2 |
| L604 | 6200003131 | S.COI NLV32T-120J | B | 34.7/37.4 |
| L605 | 6200003101 | S.COI NLV32T-3R9J | B | 38.2/33.8 |
| L606 | 6200002961 | S.COI NLV32T-4R7J | B | 49.0/53.1 |
| L607 | 6200001851 | S.COI NLV32T-5R6J | B | 45.5/49.6 |
| L608 | 6200001851 | S.COI NLV32T-5R6J | B | 49.7/43.5 |
| L609 | 6200001851 | S.COI NLV32T-5R6J | B | 45.5/37.4 |
| L610 | 6200002961 | S.COI NLV32T-4R7J | B | 49.0/33.8 |
| L611 | 6200002991 | S.COI NLV32T-2R2J | B | 59.8/53.1 |
| L612 | 6200003111 | S.COI NLV32T-6R8J | B | 56.3/49.6 |
| L613 | 6200003111 | S.COI NLV32T-6R8J | B | 60.5/43.5 |
| L614 | 6200003111 | S.COI NLV32T-6R8J | B | 56.3/37.4 |
| L615 | 6200002991 | S.COI NLV32T-2R2J | B | 59.8/33.8 |
| L616 | 6200002991 | S.COI NLV32T-2R2J | B | 70.7/53.1 |
| L617 | 6200003321 | S.COI NLV32T-3R3J | B | 67.1/49.6 |
| L618 | 6200003321 | S.COI NLV32T-3R3J | B | 71.3/43.5 |
| L619 | 6200003321 | S.COI NLV32T-3R3J | B | 67.1/37.4 |
| L620 | 6200002991 | S.COI NLV32T-2R2J | B | 70.6/33.8 |
| L621 | 6200003061 | S.COI NLV32T-1R2J | B | 81.5/53.1 |
| L622 | 6200003091 | S.COI NLV32T-2R7J | B | 78.0/49.6 |
| L623 | 6200003091 | S.COI NLV32T-2R7J | B | 82.2/43.5 |
| L624 | 6200003091 | S.COI NLV32T-2R7J | B | 78.0/37.4 |
| L625 | 6200003061 | S.COI NLV32T-1R2J | B | 81.5/33.8 |
| L626 | 6200003331 | S.COI NLV32T-1R0J | T | 37.8/50.0 |
| L627 | 6200003081 | S.COI NLV32T-1R8J | T | 40.8/50.0 |
| L628 | 6200003081 | S.COI NLV32T-1R8J | T | 40.2/43.5 |
| L629 | 6200003081 | S.COI NLV32T-1R8J | T | 40.8/36.9 |
| L630 | 6200003331 | S.COI NLV32T-1R0J | T | 37.8/36.9 |
| L631 | 6200003041 | S.COI NLV32T-R68J | T | 46.8/50.0 |
| L632 | 6200003071 | S.COI NLV32T-1R5J | T | 49.8/50.0 |
| L633 | 6200003071 | S.COI NLV32T-1R5J | T | 49.2/43.5 |
| L634 | 6200003071 | S.COI NLV32T-1R5J | T | 49.8/36.9 |
| L635 | 6200003041 | S.COI NLV32T-R68J | T | 46.8/36.9 |
| L636 | 6200002981 | S.COI NLV32T-R56J | T | 55.8/50.0 |
| L637 | 6200003051 | S.COI NLV32T-R82J | T | 58.9/50.0 |
| L638 | 6200003051 | S.COI NLV32T-R82J | T | 58.2/43.5 |
| L639 | 6200003051 | S.COI NLV32T-R82J | T | 58.8/36.9 |
| L640 | 6200002981 | S.COI NLV32T-R56J | T | 55.8/36.9 |
| L641 | 6200003021 | S.COI NLV32T-R33J | T | 64.8/50.0 |
| L642 | 6200003041 | S.COI NLV32T-R68J | T | 67.8/50.0 |
| L643 | 6200003041 | S.COI NLV32T-R68J | T | 67.2/43.5 |
| L644 | 6200003041 | S.COI NLV32T-R68J | T | 67.8/36.9 |
| L645 | 6200003021 | S.COI NLV32T-R33J | T | 64.8/36.9 |
| L646 | 6200005491 | S.COI NLV32T-331J | T | 79.8/50.0 |
| L647 | 6200007810 | S.COI LQH31HN95NK03L | T | 73.2/51.3 |
| L648 | 6200009810 | S.COI LQH31HNR61J03L | T | 76.8/50.0 |
| L649 | 6200009810 | S.COI LQH31HNR61J03L | T | 75.5/43.7 |
| L650 | 6200009810 | S.COI LQH31HNR61J03L | T | 76.8/36.9 |
| L651 | 6200007810 | S.COI LQH31HN95NK03L | B | 105.5/13.0 |
| L801 | 6200005491 | S.COI NLV32T-331J | B | 67.0/123.5 |
| L803 | 6140003970 | COI LR-494 | | |
| L804 | 6200003241 | S.COI NLV32T-221J | B | 49.2/26.0 |
| L820 | 6200003161 | S.COI NLV32T-270J | T | 86.6/48.4 |
| L821 | 6200003191 | S.COI NLV32T-470J | T | 85.8/44.9 |
| L822 | 6200003201 | S.COI NLV32T-560J | T | 86.6/39.8 |
| | | | | |
| R1 | 7030003550 | S.RES ERJ3GEYJ 822 V (8.2K) | B | 214.8/107.3 |

Eqv.= This component is equivalent to the REF No. component listed above, and may be substituted on parts orders and repairs.

M.=Mounted side (T: Mounted on the Top side, B: Mounted on the Bottom side)
S.=Surface mount

## [MAIN UNIT]

| REF NO. | PARTS NO. | DESCRIPTION | M. | H/V LOCATION |
|---|---|---|---|---|
| R2 | 7030003550 | S.RES ERJ3GEYJ 822 V (8.2K) | B | 174.1/104.9 |
| R3 | 7030003520 | S.RES ERJ3GEYJ 472 V (4.7K) | B | 161.1/103.9 |
| R4 | 7030003620 | S.RES ERJ3GEYJ 333 V (33K) | B | 161.1/101.1 |
| R5 | 7030003580 | S.RES ERJ3GEYJ 153 V (15K) | B | 161.9/99.1 |
| R6 | 7030003520 | S.RES ERJ3GEYJ 472 V (4.7K) | B | 161.8/93.8 |
| R7 | 7030003520 | S.RES ERJ3GEYJ 472 V (4.7K) | B | 172.2/104.2 |
| R8 | 7030003620 | S.RES ERJ3GEYJ 333 V (33K) | B | 170.6/101.2 |
| R9 | 7030003580 | S.RES ERJ3GEYJ 153 V (15K) | B | 172.8/100.4 |
| R10 | 7030003520 | S.RES ERJ3GEYJ 472 V (4.7K) | B | 172.7/95.1 |
| R11 | 7030009891 | S.RES ERA3YED 151V (150) | B | 167.1/94.5 |
| R12 | 7030003560 | S.RES ERJ3GEYJ 103 V (10K) | B | 167.1/96.3 |
| R13 | 7030003480 | S.RES ERJ3GEYJ 222 V (2.2K) | B | 148.7/106.9 |
| R14 | 7030003560 | S.RES ERJ3GEYJ 103 V (10K) | B | 146.9/106.9 |
| R15 | 7030003640 | S.RES ERJ3GEYJ 473 V (47K) | B | 145.1/110.4 |
| R16 | 7030003680 | S.RES ERJ3GEYJ 104 V (100K) | T | 224.8/77.8 |
| R17 | 7030003680 | S.RES ERJ3GEYJ 104 V (100K) | T | 223.4/77.8 |
| R18 | 7030003400 | S.RES ERJ3GEYJ 471 V (470) | T | 222.1/77.8 |
| R19 | 7030003680 | S.RES ERJ3GEYJ 104 V (100K) | T | 227.2/77.8 |
| R20 | 7030003680 | S.RES ERJ3GEYJ 104 V (100K) | T | 228.6/77.8 |
| R21 | 7030003400 | S.RES ERJ3GEYJ 471 V (470) | T | 230.0/77.8 |
| R22 | 7030003560 | S.RES ERJ3GEYJ 103 V (10K) | T | 180.8/69.7 |
| R23 | 7030003560 | S.RES ERJ3GEYJ 103 V (10K) | T | 181.6/67.8 |
| R24 | 7030003560 | S.RES ERJ3GEYJ 103 V (10K) | T | 182.3/69.7 |
| R25 | 7030003440 | S.RES ERJ3GEYJ 102 V (1K) | T | 181.6/71.6 |
| R26 | 7030003560 | S.RES ERJ3GEYJ 103 V (10K) | T | 193.3/69.7 |
| R27 | 7030003560 | S.RES ERJ3GEYJ 103 V (10K) | T | 192.5/67.8 |
| R28 | 7030003560 | S.RES ERJ3GEYJ 103 V (10K) | T | 191.8/69.7 |
| R29 | 7030003440 | S.RES ERJ3GEYJ 102 V (1K) | T | 192.5/71.6 |
| R30 | 7030003320 | S.RES ERJ3GEYJ 101 V (100) | T | 192.5/66.5 |
| R31 | 7030003560 | S.RES ERJ3GEYJ 103 V (10K) | T | 193.8/88.0 |
| R32 | 7030003560 | S.RES ERJ3GEYJ 103 V (10K) | T | 193.8/86.7 |
| R33 | 7030003560 | S.RES ERJ3GEYJ 103 V (10K) | B | 188.8/83.7 |
| R34 | 7030003440 | S.RES ERJ3GEYJ 102 V (1K) | T | 222.3/96.5 |
| R35 | 7030003580 | S.RES ERJ3GEYJ 153 V (15K) | T | 222.3/97.8 |
| R36 | 7030003580 | S.RES ERJ3GEYJ 153 V (15K) | T | 225.1/99.0 |
| R37 | 7030003320 | S.RES ERJ3GEYJ 101 V (100) | T | 219.7/97.8 |
| R38 | 7030003390 | S.RES ERJ3GEYJ 391 V (390) | T | 225.1/100.3 |
| R39 | 7030003440 | S.RES ERJ3GEYJ 102 V (1K) | T | 179.3/97.8 |
| R40 | 7030003580 | S.RES ERJ3GEYJ 153 V (15K) | T | 179.3/99.1 |
| R41 | 7030003580 | S.RES ERJ3GEYJ 153 V (15K) | T | 182.3/100.3 |
| R42 | 7030003320 | S.RES ERJ3GEYJ 101 V (100) | T | 176.5/99.1 |
| R43 | 7030003390 | S.RES ERJ3GEYJ 391 V (390) | T | 182.3/101.6 |
| R44 | 7030003320 | S.RES ERJ3GEYJ 101 V (100) | T | 181.6/66.5 |
| R47 | 7030003560 | S.RES ERJ3GEYJ 103 V (10K) | B | 185.5/83.7 |
| R49 | 7540000270 | S.ABS ERZVF2M201 | B | 110.1/123.5 |
| R50 | 7310003820 | TRI EVN-D2AA03 B14 | | |
| R51 | 7030003560 | S.RES ERJ3GEYJ 103 V (10K) | B | 152.0/123.2 |
| R52 | 7030003200 | S.RES ERJ3GEYJ 100 V (10) | B | 109.6/98.6 |
| R53 | 7030003390 | S.RES ERJ3GEYJ 391 V (390) | B | 118.6/102.4 |
| R54 | 7030003480 | S.RES ERJ3GEYJ 222 V (2.2K) | T | 89.9/109.6 |
| R55 | 7030003480 | S.RES ERJ3GEYJ 222 V (2.2K) | T | 91.3/109.6 |
| R56 | 7030003520 | S.RES ERJ3GEYJ 472 V (4.7K) | T | 88.4/109.6 |
| R57 | 7030003620 | S.RES ERJ3GEYJ 333 V (33K) | T | 86.1/109.9 |
| R58 | 7030003580 | S.RES ERJ3GEYJ 153 V (15K) | T | 83.5/109.9 |
| R59 | 7030003520 | S.RES ERJ3GEYJ 472 V (4.7K) | T | 85.4/107.6 |
| R60 | 7510001511 | S.THE NTCG16 4LH 223JT | B | 125.0/86.8 |
| R61 | 7030003660 | S.RES ERJ3GEYJ 683 V (68K) | B | 123.2/86.8 |
| R62 | 7030003480 | S.RES ERJ3GEYJ 222 V (2.2K) | B | 121.4/86.8 |
| R63 | 7030003680 | S.RES ERJ3GEYJ 104 V (100K) | B | 124.0/82.5 |
| R64 | 7030003560 | S.RES ERJ3GEYJ 103 V (10K) | B | 124.0/84.3 |
| R65 | 7030003720 | S.RES ERJ3GEYJ 224 V (220K) | B | 121.4/83.5 |
| R66 | 7030003320 | S.RES ERJ3GEYJ 101 V (100) | B | 121.4/80.2 |
| R67 | 7030005681 | S.RES ERA3YKD 473V (47K) | B | 105.3/90.5 |
| R68 | 7030008121 | S.RES ERA3YED 682V (6.8K) | B | 110.0/87.9 |
| R69 | 7310005370 | S.TRI EVM3VBQ2 470 | T | 108.9/90.0 |
| R70 | 7030008121 | S.RES ERA3YED 682V (6.8K) | B | 108.9/90.5 |
| R71 | 7030005681 | S.RES ERA3YKD 473V (47K) | B | 107.1/90.5 |
| R72 | 7030003740 | S.RES ERJ3GEYJ 334 V (330K) | B | 110.7/90.5 |
| R73 | 7030003520 | S.RES ERJ3GEYJ 472 V (4.7K) | T | 109.0/78.0 |
| R74 | 7030003720 | S.RES ERJ3GEYJ 224 V (220K) | B | 121.4/92.0 |
| R75 | 7030003600 | S.RES ERJ3GEYJ 223 V (22K) | T | 108.0/86.3 |
| R76 | 7030003620 | S.RES ERJ3GEYJ 333 V (33K) | T | 110.6/86.3 |
| R77 | 7030003720 | S.RES ERJ3GEYJ 224 V (220K) | B | 110.7/85.6 |
| R78 | 7030003680 | S.RES ERJ3GEYJ 104 V (100K) | T | 118.1/90.5 |
| R79 | 7310005430 | S.TRI EVM3VBE5 220K (220K) | T | 114.5/90.0 |
| R80 | 7030003680 | S.RES ERJ3GEYJ 104 V (100K) | T | 118.7/84.6 |
| R81 | 7310005430 | S.TRI EVM3VBE5 220K (220K) | T | 114.5/85.1 |
| R82 | 7310005420 | S.TRI EVM3VB15 100K (100K) | T | 114.5/80.2 |
| R83 | 7030003680 | S.RES ERJ3GEYJ 104 V (100K) | B | 116.6/79.2 |
| R84 | 7030003720 | S.RES ERJ3GEYJ 224 V (220K) | B | 116.6/81.0 |
| R85 | 7030009920 | S.RES ERJ3GEYJ 335 V (3.3M) | B | 113.3/81.0 |
| R86 | 7030003380 | S.RES ERJ3GEYJ 331 V (330) | B | 110.7/80.2 |
| R87 | 7030003320 | S.RES ERJ3GEYJ 101 V (100) | T | 116.1/77.8 |
| R88 | 7030003440 | S.RES ERJ3GEYJ 102 V (1K) | T | 123.0/95.8 |
| R89 | 7030003440 | S.RES ERJ3GEYJ 102 V (1K) | T | 125.6/93.2 |
| R90 | 7030003800 | S.RES ERJ3GEYJ 105 V (1M) | B | 129.6/85.8 |
| R91 | 7030003660 | S.RES ERJ3GEYJ 683 V (68K) | B | 129.6/88.6 |
| R92 | 7030003380 | S.RES ERJ3GEYJ 331 V (330) | B | 119.5/93.4 |
| R93 | 7310005390 | S.TRI EVM3VBQ3 4.7K (4.7K) | T | 108.9/80.4 |
| R94 | 7030003320 | S.RES ERJ3GEYJ 101 V (100) | B | 136.8/95.0 |
| R95 | 7030003840 | S.RES ERJ3GEYJ 225 V (2.2M) | B | 129.7/100.1 |
| R96 | 7030009920 | S.RES ERJ3GEYJ 335 V (3.3M) | B | 126.4/103.7 |
| R97 | 7030011040 | S.RES ERJ3GEYJ 685 V (6.8M) | B | 126.4/100.1 |
| R98 | 7030003320 | S.RES ERJ3GEYJ 101 V (100) | T | 122.8/90.9 |
| R99 | 7030000380 | S.RES MCR10EZHJ 1 K (102) | B | 126.2/89.4 |
| R100 | 7030003440 | S.RES ERJ3GEYJ 102 V (1K) | T | 216.4/79.1 |
| R101 | 7030003520 | S.RES ERJ3GEYJ 472 V (4.7K) | T | 210.7/79.1 |
| R102 | 7030003680 | S.RES ERJ3GEYJ 104 V (100K) | T | 212.0/79.1 |
| R103 | 7030003560 | S.RES ERJ3GEYJ 103 V (10K) | T | 215.7/77.0 |
| R104 | 7030003560 | S.RES ERJ3GEYJ 103 V (10K) | T | 214.3/70.0 |
| R105 | 7030003440 | S.RES ERJ3GEYJ 102 V (1K) | T | 206.8/79.1 |
| R106 | 7030003520 | S.RES ERJ3GEYJ 472 V (4.7K) | T | 201.1/79.1 |
| R107 | 7030003680 | S.RES ERJ3GEYJ 104 V (100K) | T | 202.4/79.1 |
| R108 | 7030003560 | S.RES ERJ3GEYJ 103 V (10K) | T | 206.1/77.0 |
| R109 | 7030003560 | S.RES ERJ3GEYJ 103 V (10K) | T | 205.1/70.0 |

## [MAIN UNIT]

| REF NO. | PARTS NO. | DESCRIPTION | M. | H/V LOCATION |
|---|---|---|---|---|
| R110 | 7030003560 | S.RES ERJ3GEYJ 103 V (10K) | T | 216.5/91.0 |
| R111 | 7030003560 | S.RES ERJ3GEYJ 103 V (10K) | T | 215.2/91.0 |
| R113 | 7030003440 | S.RES ERJ3GEYJ 102 V (1K) | T | 215.6/70.0 |
| R114 | 7030003560 | S.RES ERJ3GEYJ 103 V (10K) | T | 214.3/67.3 |
| R115 | 7030003440 | S.RES ERJ3GEYJ 102 V (1K) | T | 203.8/70.0 |
| R116 | 7030003560 | S.RES ERJ3GEYJ 103 V (10K) | T | 205.1/67.3 |
| R117 | 7030003620 | S.RES ERJ3GEYJ 333 V (33K) | T | 124.7/75.0 |
| R118 | 7030003680 | S.RES ERJ3GEYJ 104 V (100K) | T | 126.0/75.0 |
| R119 | 7030003560 | S.RES ERJ3GEYJ 103 V (10K) | B | 217.0/60.1 |
| R120 | 7030003560 | S.RES ERJ3GEYJ 103 V (10K) | B | 217.0/56.7 |
| R121 | 7030003610 | S.RES ERJ3GEYJ 273 V (27K) | T | 191.0/90.9 |
| R122 | 7030003610 | S.RES ERJ3GEYJ 273 V (27K) | T | 191.4/87.0 |
| R123 | 7030003520 | S.RES ERJ3GEYJ 472 V (4.7K) | T | 214.6/46.3 |
| R124 | 7030003520 | S.RES ERJ3GEYJ 472 V (4.7K) | T | 205.3/47.2 |
| R125 | 7030003320 | S.RES ERJ3GEYJ 101 V (100) | T | 213.6/48.8 |
| R126 | 7030003470 | S.RES ERJ3GEYJ 182 V (1.8K) | T | 167.3/61.4 |
| R127 | 7030003470 | S.RES ERJ3GEYJ 182 V (1.8K) | T | 167.3/62.8 |
| R128 | 7030003470 | S.RES ERJ3GEYJ 182 V (1.8K) | T | 167.3/64.1 |
| R129 | 7030003470 | S.RES ERJ3GEYJ 182 V (1.8K) | T | 167.3/65.4 |
| R130 | 7030003480 | S.RES ERJ3GEYJ 222 V (2.2K) | B | 219.8/57.7 |
| R131 | 7030003480 | S.RES ERJ3GEYJ 222 V (2.2K) | B | 219.6/59.3 |
| R132 | 7030000380 | S.RES MCR10EZHJ 1 K (102) | B | 123.5/92.6 |
| R133 | 7030003520 | S.RES ERJ3GEYJ 472 V (4.7K) | T | 230.6/61.6 |
| R134 | 7030003440 | S.RES ERJ3GEYJ 102 V (1K) | T | 232.2/65.3 |
| R135 | 7030003520 | S.RES ERJ3GEYJ 472 V (4.7K) | T | 232.0/53.0 |
| R136 | 7030003440 | S.RES ERJ3GEYJ 102 V (1K) | T | 232.0/51.7 |
| R137 | 7030003480 | S.RES ERJ3GEYJ 222 V (2.2K) | T | 232.2/64.0 |
| R138 | 7030003320 | S.RES ERJ3GEYJ 101 V (100) | B | 204.5/64.9 |
| R139 | 7030003640 | S.RES ERJ3GEYJ 473 V (47K) | T | 226.2/71.0 |
| R140 | 7030003640 | S.RES ERJ3GEYJ 473 V (47K) | T | 230.4/46.7 |
| R141 | 7030003560 | S.RES ERJ3GEYJ 103 V (10K) | B | 256.3/59.4 |
| R142 | 7030003640 | S.RES ERJ3GEYJ 473 V (47K) | B | 254.5/59.4 |
| R143 | 7030004040 | S.RES ERJ3GEYJ 4R7 V (4.7) | B | 252.5/98.6 |
| R144 | 7030004040 | S.RES ERJ3GEYJ 4R7 V (4.7) | B | 244.1/109.8 |
| R145 | 7030003440 | S.RES ERJ3GEYJ 102 V (1K) | T | 234.8/76.9 |
| R146 | 7510001511 | S.THE NTCG16 4LH 223JT | T | 232.2/76.9 |
| R147 | 7030003750 | S.RES ERJ3GEYJ 394 V (390K) | T | 233.7/75.6 |
| R149 | 7030003360 | S.RES ERJ3GEYJ 221 V (220) | B | 252.2/92.4 |
| R150 | 7030003360 | S.RES ERJ3GEYJ 221 V (220) | B | 243.8/92.4 |
| R151 | 7030003290 | S.RES ERJ3GEYJ 560 V (56) | T | 243.8/33.1 |
| R152 | 7030003320 | S.RES ERJ3GEYJ 101 V (100) | B | 215.1/71.9 |
| R154 | 7030003320 | S.RES ERJ3GEYJ 101 V (100) | T | 206.3/37.3 |
| R155 | 7030003640 | S.RES ERJ3GEYJ 473 V (47K) | T | 215.3/42.8 |
| R156 | 7030003640 | S.RES ERJ3GEYJ 473 V (47K) | T | 204.6/39.9 |
| R157 | 7030003480 | S.RES ERJ3GEYJ 222 V (2.2K) | T | 214.9/82.1 |
| R158 | 7030003480 | S.RES ERJ3GEYJ 222 V (2.2K) | T | 206.0/82.6 |
| R159 | 7030003440 | S.RES ERJ3GEYJ 102 V (1K) | T | 214.3/64.6 |
| R160 | 7030003440 | S.RES ERJ3GEYJ 102 V (1K) | T | 226.7/92.1 |
| R161 | 7030003480 | S.RES ERJ3GEYJ 222 V (2.2K) | T | 228.0/92.1 |
| R162 | 7030003680 | S.RES ERJ3GEYJ 104 V (100K) | T | 226.7/89.3 |
| R163 | 7030003570 | S.RES ERJ3GEYJ 123 V (12K) | T | 228.0/89.3 |
| R164 | 7030003680 | S.RES ERJ3GEYJ 104 V (100K) | T | 229.3/89.3 |
| R165 | 7030003680 | S.RES ERJ3GEYJ 104 V (100K) | T | 230.6/89.3 |
| R166 | 7030003400 | S.RES ERJ3GEYJ 471 V (470) | T | 231.9/89.3 |
| R167 | 7030003440 | S.RES ERJ3GEYJ 102 V (1K) | T | 225.4/92.1 |
| R168 | 7030003480 | S.RES ERJ3GEYJ 222 V (2.2K) | T | 224.1/92.1 |
| R169 | 7030003680 | S.RES ERJ3GEYJ 104 V (100K) | T | 225.4/89.3 |
| R170 | 7030003570 | S.RES ERJ3GEYJ 123 V (12K) | T | 224.1/89.3 |
| R171 | 7030003680 | S.RES ERJ3GEYJ 104 V (100K) | T | 222.8/89.3 |
| R172 | 7030003680 | S.RES ERJ3GEYJ 104 V (100K) | T | 221.5/89.3 |
| R173 | 7030003400 | S.RES ERJ3GEYJ 471 V (470) | T | 220.2/89.3 |
| R174 | 7030003440 | S.RES ERJ3GEYJ 102 V (1K) | T | 205.1/64.5 |
| R175 | 7030003860 | S.RES ERJ3GE JPW V | B | 192.6/39.5 |
| R176 | 7030003450 | S.RES ERJ3GEYJ 122 V (1.2K) | T | 107.9/82.8 |
| R180 | 7030003560 | S.RES ERJ3GEYJ 103 V (10K) | B | 190.2/57.0 |
| R181 | 7030003560 | S.RES ERJ3GEYJ 103 V (10K) | B | 191.8/57.0 |
| R183 | 7030003470 | S.RES ERJ3GEYJ 182 V (1.8K) | T | 167.3/60.1 |
| R184 | 7030003470 | S.RES ERJ3GEYJ 182 V (1.8K) | T | 167.3/58.8 |
| R185 | 7030003470 | S.RES ERJ3GEYJ 182 V (1.8K) | T | 167.3/57.5 |
| R186 | 7030003470 | S.RES ERJ3GEYJ 182 V (1.8K) | T | 167.3/56.2 |
| R187 | 7030003480 | S.RES ERJ3GEYJ 222 V (2.2K) | T | 180.9/57.9 |
| R188 | 7030003480 | S.RES ERJ3GEYJ 222 V (2.2K) | T | 180.9/56.6 |
| R189 | 7030003560 | S.RES ERJ3GEYJ 103 V (10K) | B | 188.9/43.4 |
| R190 | 7030003560 | S.RES ERJ3GEYJ 103 V (10K) | B | 188.9/40.6 |
| R191 | 7030003440 | S.RES ERJ3GEYJ 102 V (1K) | T | 194.1/35.7 |
| R192 | 7030003610 | S.RES ERJ3GEYJ 273 V (27K) | T | 192.0/34.9 |
| R193 | 7030003440 | S.RES ERJ3GEYJ 102 V (1K) | T | 178.4/41.4 |
| R194 | 7030003610 | S.RES ERJ3GEYJ 273 V (27K) | T | 181.7/35.5 |
| R195 | 7030003440 | S.RES ERJ3GEYJ 102 V (1K) | T | 191.3/44.9 |
| R196 | 7030003440 | S.RES ERJ3GEYJ 102 V (1K) | T | 183.4/48.1 |
| R197 | 7030003320 | S.RES ERJ3GEYJ 101 V (100) | T | 125.6/94.5 |
| R198 | 7030003640 | S.RES ERJ3GEYJ 473 V (47K) | T | 120.2/90.9 |
| R199 | 7030003520 | S.RES ERJ3GEYJ 472 V (4.7K) | T | 121.7/89.0 |
| R200 | 7030003560 | S.RES ERJ3GEYJ 103 V (10K) | B | 166.9/76.5 |
| R201 | 7030003560 | S.RES ERJ3GEYJ 103 V (10K) | T | 161.2/71.4 |
| R202 | 7030003520 | S.RES ERJ3GEYJ 472 V (4.7K) | T | 167.5/72.8 |
| R203 | 7030003720 | S.RES ERJ3GEYJ 224 V (220K) | T | 166.2/73.5 |
| R204 | 7030003320 | S.RES ERJ3GEYJ 101 V (100) | T | 142.2/67.8 |
| R205 | 7030003320 | S.RES ERJ3GEYJ 101 V (100) | B | 148.3/70.0 |
| R208 | 7030003440 | S.RES ERJ3GEYJ 102 V (1K) | T | 147.2/75.9 |
| R211 | 7030003560 | S.RES ERJ3GEYJ 103 V (10K) | T | 162.7/93.7 |
| R212 | 7030003520 | S.RES ERJ3GEYJ 472 V (4.7K) | T | 165.1/91.5 |
| R213 | 7030003440 | S.RES ERJ3GEYJ 102 V (1K) | T | 165.1/94.1 |
| R214 | 7030003600 | S.RES ERJ3GEYJ 223 V (22K) | B | 152.9/84.5 |
| R216 | 7030003620 | S.RES ERJ3GEYJ 333 V (33K) | B | 152.9/82.7 |
| R218 | 7030003580 | S.RES ERJ3GEYJ 153 V (15K) | T | 138.3/85.3 |
| R221 | 7030003560 | S.RES ERJ3GEYJ 103 V (10K) | T | 158.5/93.7 |
| R222 | 7030003520 | S.RES ERJ3GEYJ 472 V (4.7K) | T | 155.9/91.5 |
| R223 | 7030003440 | S.RES ERJ3GEYJ 102 V (1K) | T | 155.9/94.1 |
| R224 | 7030003600 | S.RES ERJ3GEYJ 223 V (22K) | B | 152.9/89.3 |
| R226 | 7030003620 | S.RES ERJ3GEYJ 333 V (33K) | B | 152.9/87.5 |
| R228 | 7030003580 | S.RES ERJ3GEYJ 153 V (15K) | T | 138.3/90.2 |
| R230 | 7030003320 | S.RES ERJ3GEYJ 101 V (100) | T | 66.5/5.7 |
| R231 | 7030003320 | S.RES ERJ3GEYJ 101 V (100) | T | 74.0/23.9 |
| R232 | 7030003680 | S.RES ERJ3GEYJ 104 V (100K) | T | 74.3/20.4 |

Eqv.= This component is equivalent to the REF No. component listed above, and may be substituted on parts orders and repairs.

M.=Mounted side (T: Mounted on the Top side, B: Mounted on the Bottom side)
S.=Surface mount

## [MAIN UNIT]

| REF NO. | PARTS NO. | DESCRIPTION | M. | H/V LOCATION |
|---|---|---|---|---|
| R233 | 7030003560 | S.RES ERJ3GEYJ 103 V (10K) | T | 76.5/22.0 |
| R234 | 7030003320 | S.RES ERJ3GEYJ 101 V (100) | T | 73.3/17.2 |
| R235 | 7030003860 | S.RES ERJ3GE JPW V | T | 155.9/58.5 |
| R240 | 7030003420 | S.RES ERJ3GEYJ 681 V (680) | T | 177.1/58.1 |
| R241 | 7030003360 | S.RES ERJ3GEYJ 221 V (220) | T | 233.5/35.3 |
| R242 | 7030003440 | S.RES ERJ3GEYJ 102 V (1K) | T | 233.4/32.7 |
| R243 | 7030003440 | S.RES ERJ3GEYJ 102 V (1K) | T | 213.8/40.2 |
| R244 | 7030003440 | S.RES ERJ3GEYJ 102 V (1K) | T | 217.2/43.6 |
| R245 | 7030003540 | S.RES ERJ3GEYJ 682 V (6.8K) | T | 215.3/44.3 |
| R246 | 7030003440 | S.RES ERJ3GEYJ 102 V (1K) | T | 205.3/41.8 |
| R247 | 7030003440 | S.RES ERJ3GEYJ 102 V (1K) | T | 204.0/44.6 |
| R248 | 7030003540 | S.RES ERJ3GEYJ 682 V (6.8K) | T | 205.3/44.6 |
| R249 | 7030003560 | S.RES ERJ3GEYJ 103 V (10K) | T | 163.3/70.9 |
| R250 | 7030003200 | S.RES ERJ3GEYJ 100 V (10) | B | 117.1/28.7 |
| R251 | 7030003200 | S.RES ERJ3GEYJ 100 V (10) | B | 117.8/30.1 |
| R252 | 7030003200 | S.RES ERJ3GEYJ 100 V (10) | B | 117.1/31.5 |
| R253 | 7030003200 | S.RES ERJ3GEYJ 100 V (10) | B | 117.8/32.9 |
| R254 | 7030003200 | S.RES ERJ3GEYJ 100 V (10) | B | 117.1/34.3 |
| R255 | 7030003200 | S.RES ERJ3GEYJ 100 V (10) | B | 117.8/35.7 |
| R256 | 7030003200 | S.RES ERJ3GEYJ 100 V (10) | B | 117.1/37.1 |
| R257 | 7030003200 | S.RES ERJ3GEYJ 100 V (10) | B | 117.8/38.5 |
| R258 | 7030003560 | S.RES ERJ3GEYJ 103 V (10K) | B | 120.4/28.7 |
| R259 | 7030003560 | S.RES ERJ3GEYJ 103 V (10K) | B | 121.2/30.1 |
| R260 | 7030003560 | S.RES ERJ3GEYJ 103 V (10K) | B | 120.4/31.5 |
| R261 | 7030003560 | S.RES ERJ3GEYJ 103 V (10K) | B | 121.2/32.9 |
| R262 | 7030003560 | S.RES ERJ3GEYJ 103 V (10K) | B | 120.4/34.3 |
| R263 | 7030003560 | S.RES ERJ3GEYJ 103 V (10K) | B | 121.2/35.7 |
| R264 | 7030003560 | S.RES ERJ3GEYJ 103 V (10K) | B | 120.4/37.1 |
| R265 | 7030003560 | S.RES ERJ3GEYJ 103 V (10K) | B | 121.2/38.5 |
| R270 | 7030003200 | S.RES ERJ3GEYJ 100 V (10) | B | 120.6/42.8 |
| R271 | 7030003200 | S.RES ERJ3GEYJ 100 V (10) | B | 121.3/44.2 |
| R272 | 7030003200 | S.RES ERJ3GEYJ 100 V (10) | B | 120.6/45.6 |
| R273 | 7030003200 | S.RES ERJ3GEYJ 100 V (10) | B | 121.3/47.0 |
| R274 | 7030003200 | S.RES ERJ3GEYJ 100 V (10) | B | 120.6/48.4 |
| R275 | 7030003200 | S.RES ERJ3GEYJ 100 V (10) | B | 121.3/49.8 |
| R276 | 7030003200 | S.RES ERJ3GEYJ 100 V (10) | B | 120.6/51.2 |
| R277 | 7030003200 | S.RES ERJ3GEYJ 100 V (10) | B | 124.2/54.7 |
| R278 | 7030003560 | S.RES ERJ3GEYJ 103 V (10K) | B | 124.3/42.8 |
| R279 | 7030003560 | S.RES ERJ3GEYJ 103 V (10K) | B | 125.0/44.2 |
| R280 | 7030003560 | S.RES ERJ3GEYJ 103 V (10K) | B | 124.3/45.6 |
| R281 | 7030003560 | S.RES ERJ3GEYJ 103 V (10K) | B | 125.0/47.0 |
| R282 | 7030003560 | S.RES ERJ3GEYJ 103 V (10K) | B | 124.3/48.4 |
| R283 | 7030003560 | S.RES ERJ3GEYJ 103 V (10K) | B | 125.0/49.8 |
| R284 | 7030003560 | S.RES ERJ3GEYJ 103 V (10K) | B | 124.3/51.2 |
| R285 | 7030003560 | S.RES ERJ3GEYJ 103 V (10K) | B | 125.0/52.6 |
| R290 | 7030003200 | S.RES ERJ3GEYJ 100 V (10) | B | 164.1/41.5 |
| R291 | 7030003200 | S.RES ERJ3GEYJ 100 V (10) | B | 164.1/39.7 |
| R292 | 7030003200 | S.RES ERJ3GEYJ 100 V (10) | B | 164.1/37.9 |
| R293 | 7030003200 | S.RES ERJ3GEYJ 100 V (10) | B | 164.1/36.1 |
| R294 | 7030003200 | S.RES ERJ3GEYJ 100 V (10) | B | 164.1/34.3 |
| R295 | 7030003200 | S.RES ERJ3GEYJ 100 V (10) | B | 164.1/32.5 |
| R296 | 7030003200 | S.RES ERJ3GEYJ 100 V (10) | B | 164.1/30.7 |
| R298 | 7030003560 | S.RES ERJ3GEYJ 103 V (10K) | B | 160.8/41.5 |
| R299 | 7030003560 | S.RES ERJ3GEYJ 103 V (10K) | B | 160.8/39.7 |
| R300 | 7030003560 | S.RES ERJ3GEYJ 103 V (10K) | B | 160.8/37.9 |
| R301 | 7030003560 | S.RES ERJ3GEYJ 103 V (10K) | B | 160.8/36.1 |
| R302 | 7030003560 | S.RES ERJ3GEYJ 103 V (10K) | B | 160.8/34.3 |
| R303 | 7030003560 | S.RES ERJ3GEYJ 103 V (10K) | B | 160.8/32.5 |
| R304 | 7030003560 | S.RES ERJ3GEYJ 103 V (10K) | B | 160.8/30.7 |
| R310 | 7030003200 | S.RES ERJ3GEYJ 100 V (10) | B | 166.1/55.9 |
| R311 | 7030003200 | S.RES ERJ3GEYJ 100 V (10) | B | 163.6/54.1 |
| R312 | 7030003200 | S.RES ERJ3GEYJ 100 V (10) | B | 164.1/52.3 |
| R313 | 7030003200 | S.RES ERJ3GEYJ 100 V (10) | B | 164.1/50.5 |
| R314 | 7030003200 | S.RES ERJ3GEYJ 100 V (10) | B | 164.1/48.7 |
| R315 | 7030003200 | S.RES ERJ3GEYJ 100 V (10) | B | 164.1/46.9 |
| R316 | 7030003200 | S.RES ERJ3GEYJ 100 V (10) | B | 164.1/45.1 |
| R317 | 7030003200 | S.RES ERJ3GEYJ 100 V (10) | B | 164.1/43.3 |
| R318 | 7030003560 | S.RES ERJ3GEYJ 103 V (10K) | B | 162.1/55.9 |
| R319 | 7030003560 | S.RES ERJ3GEYJ 103 V (10K) | B | 160.3/54.1 |
| R320 | 7030003560 | S.RES ERJ3GEYJ 103 V (10K) | B | 160.8/52.3 |
| R321 | 7030003560 | S.RES ERJ3GEYJ 103 V (10K) | B | 160.8/50.5 |
| R322 | 7030003560 | S.RES ERJ3GEYJ 103 V (10K) | B | 160.8/48.7 |
| R323 | 7030003560 | S.RES ERJ3GEYJ 103 V (10K) | B | 160.8/46.9 |
| R324 | 7030003560 | S.RES ERJ3GEYJ 103 V (10K) | B | 160.8/45.1 |
| R325 | 7030003560 | S.RES ERJ3GEYJ 103 V (10K) | B | 160.8/43.3 |
| R330 | 7030009891 | S.RES ERA3YED 151V (150) | T | 155.0/65.5 |
| R331 | 7030009851 | S.RES ERA3YED 271V (270) | T | 152.4/65.5 |
| R341 | 7030003520 | S.RES ERJ3GEYJ 472 V (4.7K) | B | 199.9/27.5 |
| R342 | 7030004050 | S.RES ERJ3GEYJ 1R0 V (1) | T | 214.6/28.5 |
| R351 | 7030003680 | S.RES ERJ3GEYJ 104 V (100K) | T | 129.6/81.7 |
| R352 | 7030003640 | S.RES ERJ3GEYJ 473 V (47K) | T | 132.5/83.2 |
| R353 | 7030003560 | S.RES ERJ3GEYJ 103 V (10K) | T | 134.8/83.7 |
| R361 | 7030003520 | S.RES ERJ3GEYJ 472 V (4.7K) | B | 144.8/26.2 |
| R362 | 7030004050 | S.RES ERJ3GEYJ 1R0 V (1) | T | 157.8/16.6 |
| R381 | 7030004050 | S.RES ERJ3GEYJ 1R0 V (1) | T | 93.7/50.7 |
| R397 | 7030003410 | S.RES ERJ3GEYJ 561 V (560) | B | 108.3/36.7 |
| R398 | 7030007860 | S.RES ERJ3GEYJ 8R2V (8.2) | B | 110.2/38.7 |
| R399 | 7030003410 | S.RES ERJ3GEYJ 561 V (560) | B | 108.3/39.6 |
| R400 | 7030003360 | S.RES ERJ3GEYJ 221 V (220) | T | 228.3/9.9 |
| R401 | 7030003360 | S.RES ERJ3GEYJ 221 V (220) | B | 227.3/9.9 |
| R402 | 7030003360 | S.RES ERJ3GEYJ 221 V (220) | T | 226.3/9.9 |
| R403 | 7030003360 | S.RES ERJ3GEYJ 221 V (220) | T | 28.3/9.9 |
| R404 | 7030003360 | S.RES ERJ3GEYJ 221 V (220) | T | 27.0/9.9 |
| R405 | 7030003360 | S.RES ERJ3GEYJ 221 V (220) | T | 25.7/9.9 |
| R410 | 7030003320 | S.RES ERJ3GEYJ 101 V (100) | T | 9.9/56.0 |
| R413 | 7030003320 | S.RES ERJ3GEYJ 101 V (100) | B | 9.9/53.0 |
| R414 | 7030003320 | S.RES ERJ3GEYJ 101 V (100) | T | 9.9/52.0 |
| R415 | 7030003320 | S.RES ERJ3GEYJ 101 V (100) | B | 9.9/51.0 |
| R416 | 7030003320 | S.RES ERJ3GEYJ 101 V (100) | T | 9.9/50.0 |
| R417 | 7030003320 | S.RES ERJ3GEYJ 101 V (100) | B | 9.9/47.0 |
| R418 | 7030003320 | S.RES ERJ3GEYJ 101 V (100) | T | 9.9/46.0 |
| R419 | 7030003320 | S.RES ERJ3GEYJ 101 V (100) | B | 9.9/45.0 |
| R420 | 7030003320 | S.RES ERJ3GEYJ 101 V (100) | T | 9.9/44.0 |
| R421 | 7030003320 | S.RES ERJ3GEYJ 101 V (100) | B | 9.9/43.0 |
| R422 | 7030003320 | S.RES ERJ3GEYJ 101 V (100) | T | 9.9/32.0 |

## [MAIN UNIT]

| REF NO. | PARTS NO. | DESCRIPTION | M. | H/V LOCATION |
|---|---|---|---|---|
| R423 | 7030003320 | S.RES ERJ3GEYJ 101 V (100) | T | 9.9/30.0 |
| R424 | 7030003320 | S.RES ERJ3GEYJ 101 V (100) | B | 9.9/29.0 |
| R450 | 7030003600 | S.RES ERJ3GEYJ 223 V (22K) | B | 205.8/28.0 |
| R451 | 7030003600 | S.RES ERJ3GEYJ 223 V (22K) | B | 166.9/18.4 |
| R452 | 7030003600 | S.RES ERJ3GEYJ 223 V (22K) | B | 94.3/43.7 |
| R460 | 7030003560 | S.RES ERJ3GEYJ 103 V (10K) | B | 144.4/79.4 |
| R461 | 7030003560 | S.RES ERJ3GEYJ 103 V (10K) | B | 144.2/73.6 |
| R462 | 7030003580 | S.RES ERJ3GEYJ 153 V (15K) | T | 79.1/23.3 |
| R463 | 7030003560 | S.RES ERJ3GEYJ 103 V (10K) | T | 158.6/71.4 |
| R466 | 7030003440 | S.RES ERJ3GEYJ 102 V (1K) | T | 73.7/22.2 |
| R467 | 7030003320 | S.RES ERJ3GEYJ 101 V (100) | B | 148.3/73.6 |
| R468 | 7030003620 | S.RES ERJ3GEYJ 333 V (33K) | T | 142.2/77.4 |
| R469 | 7030003520 | S.RES ERJ3GEYJ 472 V (4.7K) | T | 143.0/75.7 |
| R470 | 7030003620 | S.RES ERJ3GEYJ 333 V (33K) | T | 165.9/78.4 |
| R471 | 7030003440 | S.RES ERJ3GEYJ 102 V (1K) | T | 152.2/67.8 |
| R472 | 7030003640 | S.RES ERJ3GEYJ 473 V (47K) | T | 165.9/77.1 |
| R474 | 7030003600 | S.RES ERJ3GEYJ 223 V (22K) | T | 132.5/75.3 |
| R476 | 7030003760 | S.RES ERJ3GEYJ 474 V (470K) | T | 126.5/77.5 |
| R479 | 7030003550 | S.RES ERJ3GEYJ 822 V (8.2K) | B | 170.5/73.6 |
| R481 | 7030003860 | S.RES ERJ3GE JPW V | B | 170.5/70.8 |
| R482 | 7030000010 | S.RES MCR10EZHJ JPW (000) | B | 108.8/46.0 |
| R483 | 7030000010 | S.RES MCR10EZHJ JPW (000) | B | 206.6/18.3 |
| R484 | 7030000010 | S.RES MCR10EZHJ JPW (000) | B | 151.6/27.6 |
| R485 | 7030003860 | S.RES ERJ3GE JPW V | T | 9.9/48.0 |
| R486 | 7030003860 | S.RES ERJ3GE JPW V | B | 9.9/49.0 |
| R487 | 7030000010 | S.RES MCR10EZHJ JPW (000) | T | 9.9/58.1 |
| R488 | 7030003860 | S.RES ERJ3GE JPW V | B | 111.4/76.2 |
| R489 | 7030003500 | S.RES ERJ3GEYJ 332 V (3.3K) | B | 229.0/6.0 |
| R490 | 7030003440 | S.RES ERJ3GEYJ 102 V (1K) | B | 159.4/63.3 |
| R491 | 7030003560 | S.RES ERJ3GEYJ 103 V (10K) | B | 157.7/59.6 |
| R492 | 7030003560 | S.RES ERJ3GEYJ 103 V (10K) | B | 159.5/59.6 |
| R493 | 7030003410 | S.RES ERJ3GEYJ 561 V (560) | T | 130.7/103.0 |
| R494 | 7030005331 | S.RES ERA3YED 562V (5.6K) | T | 218.5/78.6 |
| R495 | 7030010480 | S.RES ERJ1TYJ 181U (180) | T | 212.4/2.4 |
| R496 | 7030005331 | S.RES ERA3YED 562V (5.6K) | T | 218.5/77.3 |
| R497 | 7030007911 | S.RES ERA3YKD 563V (56K) | B | 228.6/16.1 |
| R498 | 7030005631 | S.RES ERA3YKD 154V (150K) | B | 228.6/20.3 |
| R499 | 7030005631 | S.RES ERA3YKD 154V (150K) | B | 230.4/20.3 |
| R501 | 7030003440 | S.RES ERJ3GEYJ 102 V (1K) | T | 20.7/58.3 |
| R502 | 7030003560 | S.RES ERJ3GEYJ 103 V (10K) | T | 19.2/60.9 |
| R503 | 7030003440 | S.RES ERJ3GEYJ 102 V (1K) | T | 22.2/58.3 |
| R504 | 7030003440 | S.RES ERJ3GEYJ 102 V (1K) | T | 23.7/60.9 |
| R505 | 7030003320 | S.RES ERJ3GEYJ 101 V (100) | T | 26.0/61.7 |
| R506 | 7030003320 | S.RES ERJ3GEYJ 101 V (100) | T | 16.1/70.6 |
| R507 | 7030003440 | S.RES ERJ3GEYJ 102 V (1K) | T | 22.2/72.4 |
| R508 | 7030003440 | S.RES ERJ3GEYJ 102 V (1K) | T | 23.7/72.4 |
| R509 | 7030003320 | S.RES ERJ3GEYJ 101 V (100) | T | 26.7/72.4 |
| R510 | 7030003320 | S.RES ERJ3GEYJ 101 V (100) | T | 19.2/81.2 |
| R511 | 7030003320 | S.RES ERJ3GEYJ 101 V (100) | T | 21.4/87.5 |
| R512 | 7030003650 | S.RES ERJ3GEYJ 563 V (56K) | B | 228.2/3.1 |
| R513 | 7030003860 | S.RES ERJ3GE JPW V | T | 103.9/68.7 |
| R514 | 7030003440 | S.RES ERJ3GEYJ 102 V (1K) | T | 19.2/96.4 |
| R515 | 7030003410 | S.RES ERJ3GEYJ 561 V (560) | T | 26.6/96.4 |
| R516 | 7030003440 | S.RES ERJ3GEYJ 102 V (1K) | T | 25.3/84.6 |
| R517 | 7030003520 | S.RES ERJ3GEYJ 472 V (4.7K) | T | 23.2/84.6 |
| R518 | 7030003400 | S.RES ERJ3GEYJ 471 V (470) | B | 20.1/91.9 |
| R519 | 7030003560 | S.RES ERJ3GEYJ 103 V (10K) | B | 20.1/89.0 |
| R520 | 7030003630 | S.RES ERJ3GEYJ 393 V (39K) | B | 24.3/91.9 |
| R521 | 7030003600 | S.RES ERJ3GEYJ 223 V (22K) | B | 24.3/87.7 |
| R522 | 7030003200 | S.RES ERJ3GEYJ 100 V (10) | B | 230.4/24.8 |
| R523 | 7030003360 | S.RES ERJ3GEYJ 221 V (220) | B | 27.9/87.7 |
| R524 | 7030003560 | S.RES ERJ3GEYJ 103 V (10K) | B | 27.1/93.9 |
| R525 | 7030003480 | S.RES ERJ3GEYJ 222 V (2.2K) | B | 31.3/91.9 |
| R526 | 7030003440 | S.RES ERJ3GEYJ 102 V (1K) | B | 31.3/98.2 |
| R527 | 7030003560 | S.RES ERJ3GEYJ 103 V (10K) | B | 31.3/94.9 |
| R528 | 7030003560 | S.RES ERJ3GEYJ 103 V (10K) | B | 34.3/96.2 |
| R529 | 7030003560 | S.RES ERJ3GEYJ 103 V (10K) | B | 34.3/89.7 |
| R530 | 7030003560 | S.RES ERJ3GEYJ 103 V (10K) | B | 48.1/95.1 |
| R531 | 7030003560 | S.RES ERJ3GEYJ 103 V (10K) | B | 48.1/82.0 |
| R532 | 7030003440 | S.RES ERJ3GEYJ 102 V (1K) | B | 40.9/91.4 |
| R533 | 7030003560 | S.RES ERJ3GEYJ 103 V (10K) | B | 44.5/91.4 |
| R534 | 7030003560 | S.RES ERJ3GEYJ 103 V (10K) | T | 49.1/79.5 |
| R535 | 7030003440 | S.RES ERJ3GEYJ 102 V (1K) | B | 49.9/82.0 |
| R536 | 7030003490 | S.RES ERJ3GEYJ 272 V (2.7K) | B | 48.7/85.7 |
| R537 | 7030003320 | S.RES ERJ3GEYJ 101 V (100) | T | 53.5/84.4 |
| R538 | 7310005400 | S.TRI EVM3VBE4 22K (22K) | T | 49.4/90.7 |
| R539 | 7030003400 | S.RES ERJ3GEYJ 471 V (470) | B | 51.7/95.1 |
| R540 | 7030003220 | S.RES ERJ3GEYJ 150 V (15) | B | 66.4/96.1 |
| R541 | 7030003380 | S.RES ERJ3GEYJ 331 V (330) | B | 64.3/96.9 |
| R543 | 7030003380 | S.RES ERJ3GEYJ 331 V (330) | B | 64.3/95.3 |
| R544 | 7030005671 | S.RES ERA3YKD 393V (39K) | B | 229.4/17.7 |
| R545 | 7030004030 | S.RES ERJ3GEYJ 5R6 V (5.6) | B | 59.9/93.8 |
| R546 | 7030003430 | S.RES ERJ3GEYJ 821 V (820) | B | 58.7/90.7 |
| R547 | 7030003430 | S.RES ERJ3GEYJ 821 V (820) | B | 61.1/90.7 |
| R548 | 7030004030 | S.RES ERJ3GEYJ 5R6 V (5.6) | B | 80.6/93.8 |
| R549 | 7030003560 | S.RES ERJ3GEYJ 103 V (10K) | T | 129.5/104.6 |
| R550 | 7030003560 | S.RES ERJ3GEYJ 103 V (10K) | T | 132.8/106.5 |
| R551 | 7030003680 | S.RES ERJ3GEYJ 104 V (100K) | T | 188.5/106.1 |
| R552 | 7030004040 | S.RES ERJ3GEYJ 4R7 V (4.7) | B | 101.6/88.7 |
| R553 | 7030009891 | S.RES ERA3YED 151V (150) | B | 108.3/85.2 |
| R554 | 7030003440 | S.RES ERJ3GEYJ 102 V (1K) | B | 105.6/85.2 |
| R555 | 7510001491 | S.THE NTCG16 3NH 681JT | B | 103.8/78.0 |
| R556 | 7030003480 | S.RES ERJ3GEYJ 222 V (2.2K) | B | 103.8/80.6 |
| R557 | 7030005331 | S.RES ERA3YED 562V (5.6K) | B | 229.5/23.0 |
| R558 | 7030003320 | S.RES ERJ3GEYJ 101 V (100) | B | 102.9/74.8 |
| R559 | 7030003680 | S.RES ERJ3GEYJ 104 V (100K) | T | 132.8/105.2 |
| R560 | 7030003680 | S.RES ERJ3GEYJ 104 V (100K) | T | 188.5/103.4 |
| R561 | 7030003680 | S.RES ERJ3GEYJ 104 V (100K) | T | 133.6/102.4 |
| R562 | 7030003320 | S.RES ERJ3GEYJ 101 V (100) | B | 77.5/69.5 |
| R563 | 7030003300 | S.RES ERJ3GEYJ 680 V (68) | T | 110.0/62.7 |
| R564 | 7030003620 | S.RES ERJ3GEYJ 333 V (33K) | T | 107.1/64.2 |
| R565 | 7030003640 | S.RES ERJ3GEYJ 473 V (47K) | B | 234.6/4.6 |
| R566 | 7030003330 | S.RES ERJ3GEYJ 121 V (120) | T | 102.8/74.1 |
| R567 | 7030003230 | S.RES ERJ3GEYJ 180 V (18) | B | 91.4/67.6 |
| R568 | 7030009851 | S.RES ERA3YED 271V (270) | B | 93.4/66.8 |

Eqv.= This component is equivalent to the REF No. component listed above, and may be substituted on parts orders and repairs.

M.=Mounted side (T: Mounted on the Top side, B: Mounted on the Bottom side)
S.=Surface mount

## [MAIN UNIT]

| REF NO. | PARTS NO. | DESCRIPTION | M. | H/V LOCATION |
|---|---|---|---|---|
| R569 | 7030009851 | S.RES ERA3YED 271V (270) | B | 89.3/66.8 |
| R570 | 7030003520 | S.RES ERJ3GEYJ 472 V (4.7K) | T | 59.9/60.7 |
| R571 | 7030003560 | S.RES ERJ3GEYJ 103 V (10K) | B | 64.5/59.2 |
| R572 | 7030004040 | S.RES ERJ3GEYJ 4R7 V (4.7) | T | 61.5/68.2 |
| R573 | 7030003400 | S.RES ERJ3GEYJ 471 V (470) | B | 68.2/59.2 |
| R574 | 7030003280 | S.RES ERJ3GEYJ 470 V (47) | T | 69.8/63.8 |
| R575 | 7030009851 | S.RES ERA3YED 271V (270) | B | 56.7/59.3 |
| R576 | 7030003230 | S.RES ERJ3GEYJ 180 V (18) | B | 54.6/58.5 |
| R577 | 7030009851 | S.RES ERA3YED 271V (270) | B | 56.7/57.7 |
| R578 | 7030003230 | S.RES ERJ3GEYJ 180 V (18) | B | 61.6/72.0 |
| R579 | 7030009851 | S.RES ERA3YED 271V (270) | B | 58.0/72.9 |
| R580 | 7030009851 | S.RES ERA3YED 271V (270) | B | 58.0/71.1 |
| R581 | 7030003430 | S.RES ERJ3GEYJ 821 V (820) | B | 92.6/73.0 |
| R582 | 7030004030 | S.RES ERJ3GEYJ 5R6 V (5.6) | B | 91.8/70.9 |
| R583 | 7030003430 | S.RES ERJ3GEYJ 821 V (820) | B | 94.2/70.8 |
| R584 | 7510001671 | S.THR NTCG16 4BH 103JT | T | 218.5/79.9 |
| R585 | 7030003600 | S.RES ERJ3GEYJ 223 V (22K) | B | 25.0/89.8 |
| R587 | 7030003200 | S.RES ERJ3GEYJ 100 V (10) | B | 61.5/68.1 |
| R589 | 7030003400 | S.RES ERJ3GEYJ 471 V (470) | B | 64.6/63.8 |
| R590 | 7030003430 | S.RES ERJ3GEYJ 821 V (820) | B | 79.8/91.7 |
| R591 | 7030003430 | S.RES ERJ3GEYJ 821 V (820) | B | 81.5/91.7 |
| R592 | 7030000300 | S.RES MCR10EZHJ 220 (221) | B | 59.4/61.9 |
| R601 | 7030000260 | S.RES MCR10EZHJ 100 (101) | B | 42.7/43.5 |
| R602 | 7030000260 | S.RES MCR10EZHJ 100 (101) | B | 53.5/43.5 |
| R603 | 7030000260 | S.RES MCR10EZHJ 100 (101) | B | 64.3/43.5 |
| R604 | 7030000260 | S.RES MCR10EZHJ 100 (101) | B | 75.2/43.5 |
| R605 | 7030000260 | S.RES MCR10EZHJ 100 (101) | B | 86.0/43.5 |
| R606 | 7030000260 | S.RES MCR10EZHJ 100 (101) | T | 34.3/43.5 |
| R607 | 7030000260 | S.RES MCR10EZHJ 100 (101) | T | 43.3/43.5 |
| R608 | 7030000260 | S.RES MCR10EZHJ 100 (101) | T | 52.3/43.5 |
| R609 | 7030000260 | S.RES MCR10EZHJ 100 (101) | T | 61.3/43.5 |
| R610 | 7030003400 | S.RES ERJ3GEYJ 471 V (470) | T | 79.8/54.0 |
| R611 | 7030000260 | S.RES MCR10EZHJ 100 (101) | T | 70.3/43.5 |
| R612 | 7030009851 | S.RES ERA3YED 271V (270) | T | 44.1/54.1 |
| R613 | 7030003230 | S.RES ERJ3GEYJ 180 V (18) | T | 46.2/53.4 |
| R614 | 7030009851 | S.RES ERA3YED 271V (270) | T | 44.1/52.8 |
| R801 | 7030003380 | S.RES ERJ3GEYJ 331 V (330) | T | 37.2/26.2 |
| R802 | 7030009891 | S.RES ERA3YED 151V (150) | B | 37.2/18.7 |
| R803 | 7030003440 | S.RES ERJ3GEYJ 102 V (1K) | B | 49.7/21.0 |
| R804 | 7030003490 | S.RES ERJ3GEYJ 272 V (2.7K) | B | 47.8/21.7 |
| R805 | 7030003300 | S.RES ERJ3GEYJ 680 V (68) | T | 57.6/18.7 |
| R806 | 7030003320 | S.RES ERJ3GEYJ 101 V (100) | T | 56.2/18.7 |
| R807 | 7030003320 | S.RES ERJ3GEYJ 101 V (100) | T | 56.9/16.5 |
| R808 | 7030003640 | S.RES ERJ3GEYJ 473 V (47K) | B | 89.9/87.6 |
| R809 | 7030003460 | S.RES ERJ3GEYJ 152 V (1.5K) | B | 84.7/87.6 |
| R810 | 7030003680 | S.RES ERJ3GEYJ 104 V (100K) | T | 34.0/22.3 |
| R811 | 7030003560 | S.RES ERJ3GEYJ 103 V (10K) | T | 30.9/19.6 |
| R812 | 7030009851 | S.RES ERA3YED 271V (270) | T | 34.0/27.5 |
| R813 | 7030003230 | S.RES ERJ3GEYJ 180 V (18) | T | 34.0/26.2 |
| R814 | 7030009851 | S.RES ERA3YED 271V (270) | T | 34.0/24.9 |
| R815 | 7030003320 | S.RES ERJ3GEYJ 101 V (100) | T | 31.9/25.5 |
| R816 | 7030003680 | S.RES ERJ3GEYJ 104 V (100K) | T | 31.2/23.6 |
| R817 | 7030003860 | S.RES ERJ3GE JPW V | T | 52.7/23.9 |
| R818 | 7030003320 | S.RES ERJ3GEYJ 101 V (100) | B | 41.7/21.0 |
| R820 | 7030003440 | S.RES ERJ3GEYJ 102 V (1K) | T | 77.7/62.8 |
| R821 | 7030003320 | S.RES ERJ3GEYJ 101 V (100) | T | 88.2/61.0 |
| R822 | 7030003620 | S.RES ERJ3GEYJ 333 V (33K) | T | 88.2/58.0 |
| R823 | 7030003280 | S.RES ERJ3GEYJ 470 V (47) | T | 83.3/51.5 |
| R824 | 7030003320 | S.RES ERJ3GEYJ 101 V (100) | T | 77.1/58.7 |
| R825 | 7030003320 | S.RES ERJ3GEYJ 101 V (100) | T | 82.3/33.8 |
| R826 | 7030003230 | S.RES ERJ3GEYJ 180 V (18) | T | 87.2/36.2 |
| R827 | 7030009851 | S.RES ERA3YED 271V (270) | T | 85.2/37.0 |
| R828 | 7030009851 | S.RES ERA3YED 271V (270) | T | 85.2/35.5 |
| R829 | 7030003400 | S.RES ERJ3GEYJ 471 V (470) | T | 86.6/55.1 |
| R830 | 7030003330 | S.RES ERJ3GEYJ 121 V (120) | T | 86.0/53.3 |
| R831 | 7030003600 | S.RES ERJ3GEYJ 223 V (22K) | T | 83.3/54.6 |
| R832 | 7030003290 | S.RES ERJ3GEYJ 560 V (56) | B | 87.3/71.1 |
| R833 | 7030003480 | S.RES ERJ3GEYJ 222 V (2.2K) | B | 89.4/71.8 |
| R834 | 7030003440 | S.RES ERJ3GEYJ 102 V (1K) | B | 85.3/79.2 |
| R835 | 7030003440 | S.RES ERJ3GEYJ 102 V (1K) | B | 83.1/74.2 |
| R836 | 7030003500 | S.RES ERJ3GEYJ 332 V (3.3K) | B | 83.2/79.1 |
| R837 | 7030003480 | S.RES ERJ3GEYJ 222 V (2.2K) | T | 29.8/81.6 |
| R838 | 7030003510 | S.RES ERJ3GEYJ 392 V (3.9K) | T | 33.6/73.8 |
| R839 | 7030003480 | S.RES ERJ3GEYJ 222 V (2.2K) | T | 38.1/73.4 |
| R840 | 7030003400 | S.RES ERJ3GEYJ 471 V (470) | T | 38.1/72.1 |
| R841 | 7030003300 | S.RES ERJ3GEYJ 680 V (68) | T | 35.3/71.6 |
| R851 | 7030009861 | S.RES ERA3YED 471V (470) | T | 110.0/87.6 |
| R852 | 7030003560 | S.RES ERJ3GEYJ 103 V (10K) | T | 37.9/69.8 |
| R900 | 7030003320 | S.RES ERJ3GEYJ 101 V (100) | T | 126.3/5.8 |
| R901 | 7030003320 | S.RES ERJ3GEYJ 101 V (100) | B | 125.3/5.8 |
| R902 | 7030003320 | S.RES ERJ3GEYJ 101 V (100) | T | 124.3/5.8 |
| R903 | 7030003320 | S.RES ERJ3GEYJ 101 V (100) | B | 123.3/5.8 |
| R904 | 7030003320 | S.RES ERJ3GEYJ 101 V (100) | T | 122.3/5.8 |
| R906 | 7030003320 | S.RES ERJ3GEYJ 101 V (100) | T | 120.3/5.8 |
| R908 | 7030003320 | S.RES ERJ3GEYJ 101 V (100) | T | 118.3/5.8 |
| R909 | 7030003320 | S.RES ERJ3GEYJ 101 V (100) | B | 117.3/5.8 |
| R910 | 7030003320 | S.RES ERJ3GEYJ 101 V (100) | T | 116.3/5.8 |
| R911 | 7030003320 | S.RES ERJ3GEYJ 101 V (100) | B | 115.3/5.8 |
| R912 | 7030003320 | S.RES ERJ3GEYJ 101 V (100) | T | 114.3/5.8 |
| R913 | 7030003320 | S.RES ERJ3GEYJ 101 V (100) | B | 113.3/5.8 |
| R914 | 7030003320 | S.RES ERJ3GEYJ 101 V (100) | T | 112.3/5.8 |
| R915 | 7030003320 | S.RES ERJ3GEYJ 101 V (100) | B | 111.3/5.8 |
| R916 | 7030003320 | S.RES ERJ3GEYJ 101 V (100) | T | 110.3/5.8 |
| R917 | 7030003320 | S.RES ERJ3GEYJ 101 V (100) | B | 109.3/5.8 |
| R918 | 7030003320 | S.RES ERJ3GEYJ 101 V (100) | T | 13.8/119.5 |
| R920 | 7030003320 | S.RES ERJ3GEYJ 101 V (100) | T | 125.8/15.4 |
| R921 | 7030003320 | S.RES ERJ3GEYJ 101 V (100) | B | 124.8/15.5 |
| R922 | 7030003320 | S.RES ERJ3GEYJ 101 V (100) | T | 123.8/15.4 |
| R923 | 7030003320 | S.RES ERJ3GEYJ 101 V (100) | B | 122.8/15.5 |
| R924 | 7030003320 | S.RES ERJ3GEYJ 101 V (100) | T | 121.8/15.4 |
| R925 | 7030003320 | S.RES ERJ3GEYJ 101 V (100) | B | 120.8/15.5 |
| R926 | 7030003320 | S.RES ERJ3GEYJ 101 V (100) | T | 119.8/15.4 |
| R927 | 7030003320 | S.RES ERJ3GEYJ 101 V (100) | B | 118.8/15.5 |
| R928 | 7030003320 | S.RES ERJ3GEYJ 101 V (100) | T | 117.8/15.4 |
| R929 | 7030003320 | S.RES ERJ3GEYJ 101 V (100) | B | 116.8/15.5 |

## [MAIN UNIT]

| REF NO. | PARTS NO. | DESCRIPTION | M. | H/V LOCATION |
|---|---|---|---|---|
| R930 | 7030003320 | S.RES ERJ3GEYJ 101 V (100) | T | 115.8/15.4 |
| R932 | 7030003320 | S.RES ERJ3GEYJ 101 V (100) | T | 113.8/15.4 |
| R933 | 7030003320 | S.RES ERJ3GEYJ 101 V (100) | B | 112.8/15.4 |
| R934 | 7030003320 | S.RES ERJ3GEYJ 101 V (100) | T | 111.8/15.4 |
| R936 | 7030003320 | S.RES ERJ3GEYJ 101 V (100) | T | 109.8/15.4 |
| R937 | 7030003320 | S.RES ERJ3GEYJ 101 V (100) | B | 108.8/15.4 |
| R938 | 7030003320 | S.RES ERJ3GEYJ 101 V (100) | T | 12.5/119.5 |
| R940 | 7030003320 | S.RES ERJ3GEYJ 101 V (100) | T | 94.4/5.8 |
| R941 | 7030003320 | S.RES ERJ3GEYJ 101 V (100) | B | 93.4/5.8 |
| R942 | 7030003320 | S.RES ERJ3GEYJ 101 V (100) | T | 92.4/5.8 |
| R943 | 7030003320 | S.RES ERJ3GEYJ 101 V (100) | B | 91.4/5.8 |
| R944 | 7030003320 | S.RES ERJ3GEYJ 101 V (100) | T | 90.4/5.8 |
| R945 | 7030003320 | S.RES ERJ3GEYJ 101 V (100) | B | 89.4/5.8 |
| R946 | 7030003320 | S.RES ERJ3GEYJ 101 V (100) | T | 88.4/5.8 |
| R947 | 7030003320 | S.RES ERJ3GEYJ 101 V (100) | B | 87.4/5.8 |
| R948 | 7030003320 | S.RES ERJ3GEYJ 101 V (100) | T | 86.4/5.8 |
| R949 | 7030003320 | S.RES ERJ3GEYJ 101 V (100) | B | 85.4/5.8 |
| R950 | 7030003320 | S.RES ERJ3GEYJ 101 V (100) | T | 84.4/5.8 |
| R951 | 7030003320 | S.RES ERJ3GEYJ 101 V (100) | B | 83.4/5.8 |
| R952 | 7030003320 | S.RES ERJ3GEYJ 101 V (100) | T | 82.4/5.8 |
| R953 | 7030003320 | S.RES ERJ3GEYJ 101 V (100) | B | 81.4/5.8 |
| R954 | 7030003320 | S.RES ERJ3GEYJ 101 V (100) | T | 80.4/5.8 |
| R955 | 7030003320 | S.RES ERJ3GEYJ 101 V (100) | B | 79.4/5.8 |
| R957 | 7030003320 | S.RES ERJ3GEYJ 101 V (100) | B | 77.4/5.8 |
| R958 | 7030003320 | S.RES ERJ3GEYJ 101 V (100) | T | 76.4/5.8 |
| R960 | 7030003320 | S.RES ERJ3GEYJ 101 V (100) | T | 93.9/15.4 |
| R961 | 7030003320 | S.RES ERJ3GEYJ 101 V (100) | B | 92.9/15.4 |
| R962 | 7030003320 | S.RES ERJ3GEYJ 101 V (100) | T | 91.9/15.4 |
| R963 | 7030003320 | S.RES ERJ3GEYJ 101 V (100) | B | 90.9/15.4 |
| R964 | 7030003320 | S.RES ERJ3GEYJ 101 V (100) | T | 89.9/15.4 |
| R966 | 7030003320 | S.RES ERJ3GEYJ 101 V (100) | T | 87.9/15.4 |
| R967 | 7030003320 | S.RES ERJ3GEYJ 101 V (100) | B | 86.9/15.4 |
| R968 | 7030003320 | S.RES ERJ3GEYJ 101 V (100) | T | 85.9/15.4 |
| R969 | 7030003320 | S.RES ERJ3GEYJ 101 V (100) | B | 84.9/15.4 |
| R970 | 7030003320 | S.RES ERJ3GEYJ 101 V (100) | T | 83.9/15.4 |
| R971 | 7030003320 | S.RES ERJ3GEYJ 101 V (100) | B | 82.9/15.4 |
| R972 | 7030003320 | S.RES ERJ3GEYJ 101 V (100) | T | 81.9/15.4 |
| R973 | 7030003320 | S.RES ERJ3GEYJ 101 V (100) | B | 80.9/15.4 |
| R974 | 7030003320 | S.RES ERJ3GEYJ 101 V (100) | T | 79.9/15.4 |
| R975 | 7030003320 | S.RES ERJ3GEYJ 101 V (100) | B | 78.9/15.4 |
| R976 | 7030003320 | S.RES ERJ3GEYJ 101 V (100) | T | 77.9/15.4 |
| R977 | 7030003320 | S.RES ERJ3GEYJ 101 V (100) | B | 76.9/15.4 |
| R978 | 7030003320 | S.RES ERJ3GEYJ 101 V (100) | T | 75.9/15.4 |
| R979 | 7030003320 | S.RES ERJ3GEYJ 101 V (100) | B | 74.9/15.4 |
| C1 | 4030006880 | S.CER C1608 JB 1H 472K-T | B | 207.5/109.2 |
| C2 | 4030006880 | S.CER C1608 JB 1H 472K-T | T | 225.7/110.3 |
| C3 | 4030006880 | S.CER C1608 JB 1H 472K-T | B | 220.4/106.6 |
| C4 | 4030006880 | S.CER C1608 JB 1H 472K-T | T | 204.7/110.3 |
| C5 | 4030006880 | S.CER C1608 JB 1H 472K-T | T | 222.2/110.3 |
| C6 | 4030006880 | S.CER C1608 JB 1H 472K-T | T | 211.7/110.3 |
| C7 | 4030006880 | S.CER C1608 JB 1H 472K-T | T | 215.2/110.3 |
| C8 | 4030006880 | S.CER C1608 JB 1H 472K-T | T | 200.4/110.3 |
| C9 | 4030006880 | S.CER C1608 JB 1H 472K-T | T | 193.4/110.3 |
| C10 | 4030006880 | S.CER C1608 JB 1H 472K-T | T | 196.9/110.3 |
| C11 | 4030006880 | S.CER C1608 JB 1H 472K-T | B | 168.0/106.8 |
| C12 | 4030006880 | S.CER C1608 JB 1H 472K-T | T | 183.7/110.3 |
| C13 | 4030006880 | S.CER C1608 JB 1H 472K-T | B | 178.4/106.6 |
| C14 | 4030006880 | S.CER C1608 JB 1H 472K-T | T | 162.7/110.3 |
| C15 | 4030006880 | S.CER C1608 JB 1H 472K-T | T | 180.2/110.3 |
| C16 | 4030006880 | S.CER C1608 JB 1H 472K-T | T | 169.7/110.3 |
| C17 | 4030006880 | S.CER C1608 JB 1H 472K-T | T | 173.2/110.3 |
| C18 | 4030006880 | S.CER C1608 JB 1H 472K-T | T | 158.4/110.3 |
| C19 | 4030006880 | S.CER C1608 JB 1H 472K-T | T | 151.4/110.3 |
| C20 | 4030006880 | S.CER C1608 JB 1H 472K-T | T | 154.9/110.3 |
| C21 | 4030006880 | S.CER C1608 JB 1H 472K-T | B | 163.9/96.8 |
| C22 | 4030006880 | S.CER C1608 JB 1H 472K-T | B | 174.7/98.0 |
| C23 | 4030006880 | S.CER C1608 JB 1H 472K-T | B | 167.1/98.1 |
| C24 | 4030006880 | S.CER C1608 JB 1H 472K-T | B | 145.1/106.9 |
| C25 | 4510008540 | S.ELE EEE1CA100SR | T | 218.3/83.6 |
| C26 | 4510008540 | S.ELE EEE1CA100SR | T | 233.7/83.5 |
| C28 | 4510008540 | S.ELE EEE1CA100SR | T | 191.1/80.5 |
| C29 | 4510008540 | S.ELE EEE1CA100SR | T | 184.9/80.5 |
| C30 | 4510008540 | S.ELE EEE1CA100SR | T | 184.2/92.3 |
| C31 | 4030011600 | S.CER C1608 JB 1E 104K-T | T | 187.7/74.5 |
| C32 | 4510008540 | S.ELE EEE1CA100SR | T | 179.0/82.1 |
| C33 | 4510008540 | S.ELE EEE1CA100SR | T | 178.9/87.0 |
| C34 | 4030012600 | S.CER C2012 JB 1A 105M-T | T | 189.0/92.3 |
| C35 | 4030012600 | S.CER C2012 JB 1A 105M-T | T | 179.4/92.4 |
| C36 | 4510008500 | S.ELE EEE1CA101WP | T | 222.1/104.5 |
| C37 | 4510008540 | S.ELE EEE1CA100SR | T | 229.5/107.3 |
| C38 | 4510008500 | S.ELE EEE1CA101WP | T | 174.3/104.1 |
| C39 | 4510008540 | S.ELE EEE1CA100SR | T | 181.9/104.7 |
| C40 | 4510008540 | S.ELE EEE1CA100SR | T | 190.0/63.4 |
| C41 | 4510008540 | S.ELE EEE1CA100SR | T | 184.0/63.4 |
| C42 | 4030011600 | S.CER C1608 JB 1E 104K-T | T | 187.7/77.1 |
| C43 | 4030011600 | S.CER C1608 JB 1E 104K-T | T | 194.5/74.5 |
| C44 | 4030011600 | S.CER C1608 JB 1E 104K-T | T | 180.9/77.1 |
| C45 | 4030012600 | S.CER C2012 JB 1A 105M-T | T | 194.2/83.8 |
| C46 | 4030012600 | S.CER C2012 JB 1A 105M-T | T | 193.5/90.9 |
| C50 | 4030006880 | S.CER C1608 JB 1H 472K-T | B | 139.6/118.5 |
| C51 | 4010005380 | CER HM13SJ YB 472K 500V | | |
| C52 | 4030006880 | S.CER C1608 JB 1H 472K-T | B | 114.5/98.6 |
| C53 | 4030006880 | S.CER C1608 JB 1H 472K-T | B | 116.2/96.3 |
| C54 | 4030006880 | S.CER C1608 JB 1H 472K-T | B | 79.9/123.6 |
| C55 | 4030006880 | S.CER C1608 JB 1H 472K-T | B | 79.9/118.7 |
| C56 | 4030006880 | S.CER C1608 JB 1H 472K-T | B | 92.8/106.5 |
| C57 | 4030018620 | S.CER C1608 CH 1H 222J-T | T | 179.5/70.9 |
| C58 | 4030018620 | S.CER C1608 CH 1H 222J-T | T | 194.6/70.7 |
| C61 | 4030012600 | S.CER C2012 JB 1A 105M-T | T | 119.1/77.8 |
| C62 | 4030012600 | S.CER C2012 JB 1A 105M-T | T | 119.1/76.1 |
| C65 | 4030012600 | S.CER C2012 JB 1A 105M-T | B | 108.1/76.2 |
| C68 | 4030006860 | S.CER C1608 JB 1H 102K-T | B | 126.4/101.9 |
| C69 | 4030011600 | S.CER C1608 JB 1E 104K-T | T | 121.5/90.9 |

Eqv.= This component is equivalent to the REF No. component listed above, and may be substituted on parts orders and repairs.

M.=Mounted side (T: Mounted on the Top side, B: Mounted on the Bottom side)
S.=Surface mount

## [MAIN UNIT]

| REF NO. | PARTS NO. | DESCRIPTION | M. | H/V LOCATION |
|---|---|---|---|---|
| C70 | 4030011600 | S.CER C1608 JB 1E 104K-T | B | 122.1/89.4 |
| C71 | 4030011600 | S.CER C1608 JB 1E 104K-T | B | 136.8/96.8 |
| C80 | 4030007130 | S.CER C1608 CH 1H 101J-T | B | 59.2/122.3 |
| C100 | 4030011600 | S.CER C1608 JB 1E 104K-T | B | 208.4/91.0 |
| C101 | 4030011600 | S.CER C1608 JB 1E 104K-T | T | 213.4/87.4 |
| C103 | 4510008550 | S.ELE EEE1HA010SR | T | 210.7/83.6 |
| C105 | 4030011600 | S.CER C1608 JB 1E 104K-T | B | 201.6/91.0 |
| C106 | 4030011600 | S.CER C1608 JB 1E 104K-T | T | 206.6/87.4 |
| C108 | 4510008550 | S.ELE EEE1HA010SR | T | 202.9/83.6 |
| C110 | 4510008540 | S.ELE EEE1CA100SR | T | 209.8/63.3 |
| C113 | 4510008540 | S.ELE EEE1CA100SR | T | 209.8/73.8 |
| C115 | 4510008540 | S.ELE EEE1CA100SR | T | 209.8/48.7 |
| C116 | 4510008540 | S.ELE EEE1CA100SR | T | 209.8/38.1 |
| C117 | 4510009120 | S.ELE EEE1VA2R2NR | T | 215.7/73.8 |
| C118 | 4510009120 | S.ELE EEE1VA2R2NR | T | 203.9/73.8 |
| C120 | 4510008540 | S.ELE EEE1CA100SR | T | 223.6/50.7 |
| C121 | 4510008540 | S.ELE EEE1CA100SR | T | 214.3/58.0 |
| C122 | 4510008540 | S.ELE EEE1CA100SR | T | 204.7/58.0 |
| C123 | 4510008550 | S.ELE EEE1HA010SR | T | 227.0/56.1 |
| C124 | 4510008550 | S.ELE EEE1HA010SR | T | 227.1/60.9 |
| C125 | 4510008540 | S.ELE EEE1CA100SR | T | 218.8/67.0 |
| C126 | 4510008540 | S.ELE EEE1CA100SR | T | 223.6/67.0 |
| C127 | 4510008550 | S.ELE EEE1HA010SR | T | 234.1/60.9 |
| C128 | 4510008550 | S.ELE EEE1HA010SR | T | 233.3/56.1 |
| C129 | 4030008650 | S.CER C1608 JB 1H 332K-T | T | 215.6/67.3 |
| C130 | 4030008650 | S.CER C1608 JB 1H 332K-T | T | 203.8/67.3 |
| C131 | 4030012600 | S.CER C2012 JB 1A 105M-T | T | 220.3/52.0 |
| C132 | 4030012600 | S.CER C2012 JB 1A 105M-T | T | 218.5/52.0 |
| C133 | 4030008880 | S.CER C1608 JB 1H 223K-T | T | 232.2/66.6 |
| C134 | 4030008950 | S.CER C2012 JB 1C 823K-T | T | 231.3/69.0 |
| C135 | 4030008880 | S.CER C1608 JB 1H 223K-T | T | 234.1/52.3 |
| C136 | 4030008950 | S.CER C2012 JB 1C 823K-T | T | 232.4/50.1 |
| C140 | 4510008540 | S.ELE EEE1CA100SR | T | 249.6/35.6 |
| C141 | 4510008190 | ELE EEUFC1E222S | | |
| C142 | 4510009080 | S.ELE EEE1HAR22SR | T | 253.9/59.1 |
| C143 | 4510008500 | S.ELE EEE1CA101WP | T | 253.3/67.9 |
| C144 | 4510008180 | ELE EEUFC1E102S | | |
| C145 | 4510008180 | ELE EEUFC1E102S | | |
| C146 | 4030011600 | S.CER C1608 JB 1E 104K-T | B | 252.2/101.3 |
| C147 | 4030011600 | S.CER C1608 JB 1E 104K-T | B | 242.4/107.8 |
| C148 | 4030006880 | S.CER C1608 JB 1H 472K-T | B | 247.8/97.2 |
| C149 | 4030006880 | S.CER C1608 JB 1H 472K-T | B | 252.2/95.4 |
| C150 | 4030006880 | S.CER C1608 JB 1H 472K-T | B | 239.9/97.2 |
| C151 | 4030011600 | S.CER C1608 JB 1E 104K-T | T | 228.6/73.1 |
| C152 | 4030011600 | S.CER C1608 JB 1E 104K-T | T | 233.4/45.5 |
| C180 | 4510009010 | S.ELE EEE1AA221P | T | 188.6/50.5 |
| C181 | 4510008540 | S.ELE EEE1CA100SR | T | 209.5/58.0 |
| C182 | 4510008540 | S.ELE EEE1CA100SR | T | 199.9/58.0 |
| C183 | 4510008540 | S.ELE EEE1CA100SR | T | 194.4/57.3 |
| C184 | 4510008540 | S.ELE EEE1CA100SR | T | 195.8/52.5 |
| C185 | 4510008540 | S.ELE EEE1CA100SR | T | 195.8/47.7 |
| C186 | 4510008540 | S.ELE EEE1CA100SR | T | 180.3/50.5 |
| C187 | 4030011600 | S.CER C1608 JB 1E 104K-T | T | 183.4/39.6 |
| C188 | 4510008540 | S.ELE EEE1CA100SR | T | 194.4/42.8 |
| C189 | 4510008540 | S.ELE EEE1CA100SR | T | 180.3/45.6 |
| C190 | 4030011340 | S.CER C1608 CH 1H 471J-T | T | 194.6/33.4 |
| C191 | 4030012610 | S.CER C2012 JB 1C 474K-T | T | 191.1/37.7 |
| C192 | 4030011340 | S.CER C1608 CH 1H 471J-T | T | 180.4/35.5 |
| C193 | 4510008540 | S.ELE EEE1CA100SR | T | 186.8/31.6 |
| C194 | 4030012600 | S.CER C2012 JB 1A 105M-T | T | 180.9/59.4 |
| C195 | 4030012600 | S.CER C2012 JB 1A 105M-T | T | 180.8/54.7 |
| C196 | 4510008500 | S.ELE EEE1CA101WP | T | 176.2/36.5 |
| C197 | 4510008500 | S.ELE EEE1CA101WP | T | 199.8/31.9 |
| C198 | 4030011600 | S.CER C1608 JB 1E 104K-T | T | 125.6/95.8 |
| C200 | 4510008540 | S.ELE EEE1CA100SR | T | 153.3/80.5 |
| C201 | 4510008540 | S.ELE EEE1CA100SR | T | 160.5/80.0 |
| C203 | 4510008550 | S.ELE EEE1HA010SR | T | 170.6/70.7 |
| C204 | 4510008550 | S.ELE EEE1HA010SR | T | 142.1/70.9 |
| C205 | 4030011600 | S.CER C1608 JB 1E 104K-T | B | 148.3/71.8 |
| C206 | 4030009970 | S.CER C1608 JB 1H 182K-T | T | 192.0/33.4 |
| C207 | 4030009970 | S.CER C1608 JB 1H 182K-T | T | 181.2/33.6 |
| C208 | 4030011600 | S.CER C1608 JB 1E 104K-T | T | 219.0/42.5 |
| C209 | 4030011600 | S.CER C1608 JB 1E 104K-T | B | 244.1/25.5 |
| C210 | 4510008550 | S.ELE EEE1HA010SR | T | 168.1/100.5 |
| C211 | 4510008540 | S.ELE EEE1CA100SR | T | 160.5/84.8 |
| C212 | 4510008530 | S.ELE EEE1HA2R2SR | T | 169.7/94.9 |
| C213 | 4030017840 | S.CER C2012 CH 1H 222J-T | T | 166.7/91.5 |
| C214 | 4510008540 | S.ELE EEE1CA100SR | T | 170.6/85.3 |
| C215 | 4510008550 | S.ELE EEE1HA010SR | T | 150.5/85.3 |
| C216 | 4510008550 | S.ELE EEE1HA010SR | T | 142.6/85.3 |
| C217 | 4030007120 | S.CER C1608 CH 1H 820J-T | T | 164.9/73.5 |
| C220 | 4510008550 | S.ELE EEE1HA010SR | T | 163.3/100.5 |
| C221 | 4510008540 | S.ELE EEE1CA100SR | T | 170.6/90.1 |
| C222 | 4510008530 | S.ELE EEE1HA2R2SR | T | 151.3/94.9 |
| C223 | 4030017840 | S.CER C2012 CH 1H 222J-T | T | 154.3/91.5 |
| C225 | 4510008550 | S.ELE EEE1HA010SR | T | 150.5/90.1 |
| C226 | 4510008550 | S.ELE EEE1HA010SR | T | 142.6/90.2 |
| C230 | 4510008500 | S.ELE EEE1CA101WP | T | 68.9/10.5 |
| C231 | 4510008500 | S.ELE EEE1CA101WP | T | 84.2/22.0 |
| C233 | 4510008550 | S.ELE EEE1HA010SR | T | 69.8/16.5 |
| C234 | 4030007170 | S.CER C1608 CH 1H 221J-T | T | 73.0/20.4 |
| C235 | 4030011600 | S.CER C1608 JB 1E 104K-T | T | 79.1/22.0 |
| C241 | 4510008540 | S.ELE EEE1CA100SR | T | 232.1/28.1 |
| C242 | 4510004591 | ELE 16 ME 470 HC | | |
| C243 | 4510008500 | S.ELE EEE1CA101WP | T | 176.7/63.0 |
| C244 | 4030011600 | S.CER C1608 JB 1E 104K-T | T | 176.0/56.8 |
| C249 | 4030011600 | S.CER C1608 JB 1E 104K-T | T | 160.3/68.3 |
| C250 | 4030011600 | S.CER C1608 JB 1E 104K-T | T | 133.1/39.1 |
| C251 | 4030011600 | S.CER C1608 JB 1E 104K-T | T | 143.4/32.8 |
| C260 | 4030011600 | S.CER C1608 JB 1E 104K-T | T | 133.1/53.5 |
| C261 | 4030011600 | S.CER C1608 JB 1E 104K-T | T | 143.3/47.1 |
| C290 | 4030011600 | S.CER C1608 JB 1E 104K-T | T | 149.1/28.2 |
| C291 | 4030011600 | S.CER C1608 JB 1E 104K-T | T | 142.9/38.1 |
| C310 | 4030011600 | S.CER C1608 JB 1E 104K-T | T | 153.7/43.3 |
| C311 | 4030011600 | S.CER C1608 JB 1E 104K-T | T | 142.9/52.6 |

## [MAIN UNIT]

| REF NO. | PARTS NO. | DESCRIPTION | M. | H/V LOCATION |
|---|---|---|---|---|
| C330 | 4030011600 | S.CER C1608 JB 1E 104K-T | T | 154.6/58.5 |
| C331 | 4030011600 | S.CER C1608 JB 1E 104K-T | T | 154.6/63.5 |
| C332 | 4030011600 | S.CER C1608 JB 1E 104K-T | T | 162.4/55.9 |
| C333 | 4030011600 | S.CER C1608 JB 1E 104K-T | T | 164.7/66.8 |
| C340 | 4030017810 | S.CER C1608 CH 1H 102J-T | B | 206.0/97.0 |
| C341 | 4030017810 | S.CER C1608 CH 1H 102J-T | B | 191.2/97.0 |
| C342 | 4030011600 | S.CER C1608 JB 1E 104K-T | B | 199.9/26.2 |
| C343 | 4030007130 | S.CER C1608 CH 1H 101J-T | B | 211.9/97.0 |
| C344 | 4510008590 | S.ELE EEE1AA101SP | T | 209.7/30.7 |
| C351 | 4510008540 | S.ELE EEE1CA100SR | T | 132.4/89.7 |
| C352 | 4030011600 | S.CER C1608 JB 1E 104K-T | T | 127.2/84.1 |
| C360 | 4030017810 | S.CER C1608 CH 1H 102J-T | B | 153.8/96.9 |
| C361 | 4030017810 | S.CER C1608 CH 1H 102J-T | B | 141.8/92.7 |
| C362 | 4030011600 | S.CER C1608 JB 1E 104K-T | B | 144.8/27.5 |
| C363 | 4030007130 | S.CER C1608 CH 1H 101J-T | B | 157.1/96.9 |
| C364 | 4510008590 | S.ELE EEE1AA101SP | T | 152.9/14.8 |
| C380 | 4030017810 | S.CER C1608 CH 1H 102J-T | B | 27.6/37.6 |
| C381 | 4030017810 | S.CER C1608 CH 1H 102J-T | B | 27.7/52.4 |
| C383 | 4030007130 | S.CER C1608 CH 1H 101J-T | B | 16.5/52.3 |
| C384 | 4510008590 | S.ELE EEE1AA101SP | T | 93.0/45.8 |
| C400 | 4030006880 | S.CER C1608 JB 1H 472K-T | T | 240.5/11.7 |
| C401 | 4030006880 | S.CER C1608 JB 1H 472K-T | B | 234.8/15.5 |
| C402 | 4030006880 | S.CER C1608 JB 1H 472K-T | B | 238.1/15.5 |
| C403 | 4030006880 | S.CER C1608 JB 1H 472K-T | T | 230.5/16.0 |
| C404 | 4030006880 | S.CER C1608 JB 1H 472K-T | T | 232.0/13.1 |
| C405 | 4030006880 | S.CER C1608 JB 1H 472K-T | T | 43.2/12.9 |
| C406 | 4030006880 | S.CER C1608 JB 1H 472K-T | T | 31.1/15.3 |
| C407 | 4030006880 | S.CER C1608 JB 1H 472K-T | T | 43.2/11.6 |
| C408 | 4030006880 | S.CER C1608 JB 1H 472K-T | T | 32.0/12.6 |
| C409 | 4030006880 | S.CER C1608 JB 1H 472K-T | T | 30.7/12.6 |
| C410 | 4030006880 | S.CER C1608 JB 1H 472K-T | T | 14.8/41.0 |
| C411 | 4030006880 | S.CER C1608 JB 1H 472K-T | B | 14.8/39.6 |
| C412 | 4030006880 | S.CER C1608 JB 1H 472K-T | T | 14.8/38.0 |
| C413 | 4030006880 | S.CER C1608 JB 1H 472K-T | B | 14.8/36.4 |
| C414 | 4030006880 | S.CER C1608 JB 1H 472K-T | B | 12.8/33.0 |
| C415 | 4030006880 | S.CER C1608 JB 1H 472K-T | T | 12.8/32.0 |
| C416 | 4030006880 | S.CER C1608 JB 1H 472K-T | B | 12.8/31.0 |
| C418 | 4030006880 | S.CER C1608 JB 1H 472K-T | B | 12.0/28.2 |
| C430 | 4030006880 | S.CER C1608 JB 1H 472K-T | B | 9.0/69.0 |
| C431 | 4030006880 | S.CER C1608 JB 1H 472K-T | B | 9.0/71.0 |
| C432 | 4030006880 | S.CER C1608 JB 1H 472K-T | B | 9.0/73.0 |
| C435 | 4030006880 | S.CER C1608 JB 1H 472K-T | B | 9.1/74.6 |
| C440 | 4030006880 | S.CER C1608 JB 1H 472K-T | T | 166.3/13.5 |
| C441 | 4030006880 | S.CER C1608 JB 1H 472K-T | T | 159.0/13.1 |
| C442 | 4030006880 | S.CER C1608 JB 1H 472K-T | T | 162.6/15.7 |
| C450 | 4030006880 | S.CER C1608 JB 1H 472K-T | B | 250.3/14.2 |
| C451 | 4030006880 | S.CER C1608 JB 1H 472K-T | T | 241.8/10.8 |
| C452 | 4030006880 | S.CER C1608 JB 1H 472K-T | B | 244.1/23.7 |
| C453 | 4030006880 | S.CER C1608 JB 1H 472K-T | B | 244.1/27.3 |
| C454 | 4030006880 | S.CER C1608 JB 1H 472K-T | B | 244.2/29.0 |
| C455 | 4030006880 | S.CER C1608 JB 1H 472K-T | B | 244.1/32.3 |
| C456 | 4030006880 | S.CER C1608 JB 1H 472K-T | B | 250.4/39.6 |
| C460 | 4510008550 | S.ELE EEE1HA010SR | T | 142.1/80.5 |
| C461 | 4510008550 | S.ELE EEE1HA010SR | T | 170.6/75.7 |
| C464 | 4510008540 | S.ELE EEE1CA100SR | T | 153.3/75.7 |
| C465 | 4030011600 | S.CER C1608 JB 1E 104K-T | B | 144.2/75.4 |
| C466 | 4030011600 | S.CER C1608 JB 1E 104K-T | B | 148.3/75.4 |
| C467 | 4030012600 | S.CER C2012 JB 1A 105M-T | T | 139.3/76.4 |
| C469 | 4510008550 | S.ELE EEE1HA010SR | T | 170.6/80.5 |
| C470 | 4510008550 | S.ELE EEE1HA010SR | T | 153.3/70.9 |
| C480 | 4550007320 | S.TAN F930J226MAABMA | B | 216.6/32.3 |
| C481 | 4550007320 | S.TAN F930J226MAABMA | B | 208.7/31.3 |
| C483 | 4550007320 | S.TAN F930J226MAABMA | B | 156.0/16.2 |
| C484 | 4550007320 | S.TAN F930J226MAABMA | B | 163.9/15.2 |
| C486 | 4550007320 | S.TAN F930J226MAABMA | B | 93.6/55.4 |
| C487 | 4550007320 | S.TAN F930J226MAABMA | B | 93.5/47.5 |
| C489 | 4030011600 | S.CER C1608 JB 1E 104K-T | B | 220.9/31.1 |
| C490 | 4030011600 | S.CER C1608 JB 1E 104K-T | B | 150.2/13.6 |
| C491 | 4030011600 | S.CER C1608 JB 1E 104K-T | B | 89.8/57.0 |
| C492 | 4030006880 | S.CER C1608 JB 1H 472K-T | T | 207.6/13.0 |
| C493 | 4510008540 | S.ELE EEE1CA100SR | T | 205.4/3.8 |
| C494 | 4510004591 | ELE 16 ME 470 HC | | |
| C495 | 4030011600 | S.CER C1608 JB 1E 104K-T | B | 26.3/123.0 |
| C496 | 4030011600 | S.CER C1608 JB 1E 104K-T | B | 7.8/114.8 |
| C497 | 4030011600 | S.CER C1608 JB 1E 104K-T | T | 12.7/122.5 |
| C498 | 4510004591 | ELE 16 ME 470 HC | | |
| C499 | 4030011600 | S.CER C1608 JB 1E 104K-T | B | 229.5/26.6 |
| C501 | 4030011600 | S.CER C1608 JB 1E 104K-T | T | 19.2/58.3 |
| C502 | 4030010020 | S.CER C1608 JB 1H 122K-T | T | 23.7/58.3 |
| C503 | 4030009980 | S.CER C1608 JB 1H 152K-T | T | 22.2/60.9 |
| C505 | 4030011330 | S.CER C1608 CH 1H 391J-T | T | 25.2/58.3 |
| C506 | 4030011600 | S.CER C1608 JB 1E 104K-T | T | 26.0/64.4 |
| C507 | 4510008540 | S.ELE EEE1CA100SR | T | 29.1/66.3 |
| C508 | 4510008540 | S.ELE EEE1CA100SR | T | 16.1/66.3 |
| C509 | 4030011600 | S.CER C1608 JB 1E 104K-T | T | 19.2/66.5 |
| C510 | 4030008470 | S.CER C1608 JB 1H 272K-T | T | 20.7/72.4 |
| C511 | 4030011280 | S.CER C1608 CH 1H 271J-T | T | 25.2/72.4 |
| C512 | 4030011600 | S.CER C1608 JB 1E 104K-T | T | 26.0/76.8 |
| C513 | 4510008540 | S.ELE EEE1CA100SR | T | 29.1/77.7 |
| C514 | 4030011600 | S.CER C1608 JB 1E 104K-T | T | 19.2/78.4 |
| C515 | 4510008540 | S.ELE EEE1CA100SR | T | 16.1/78.2 |
| C516 | 4030006860 | S.CER C1608 JB 1H 102K-T | T | 22.7/87.5 |
| C517 | 4030011600 | S.CER C1608 JB 1E 104K-T | T | 20.3/91.9 |
| C518 | 4030011600 | S.CER C1608 JB 1E 104K-T | T | 25.3/87.5 |
| C519 | 4030011600 | S.CER C1608 JB 1E 104K-T | T | 26.6/87.5 |
| C520 | 4510008540 | S.ELE EEE1CA100SR | T | 30.4/86.7 |
| C521 | 4030011600 | S.CER C1608 JB 1E 104K-T | T | 24.0/87.5 |
| C522 | 4030011600 | S.CER C1608 JB 1E 104K-T | B | 18.6/91.9 |
| C523 | 4030011600 | S.CER C1608 JB 1E 104K-T | B | 21.6/91.9 |
| C524 | 4510008540 | S.ELE EEE1CA100SR | T | 29.7/97.0 |
| C525 | 4030006880 | S.CER C1608 JB 1H 472K-T | T | 26.1/91.9 |
| C526 | 4030011600 | S.CER C1608 JB 1E 104K-T | B | 26.1/87.7 |
| C527 | 4030006880 | S.CER C1608 JB 1H 472K-T | B | 29.5/91.9 |
| C528 | 4030011600 | S.CER C1608 JB 1E 104K-T | B | 29.5/94.9 |
| C529 | 4030011600 | S.CER C1608 JB 1E 104K-T | B | 33.5/87.1 |

Eqv.= This component is equivalent to the REF No. component listed above, and may be substituted on parts orders and repairs.

M.=Mounted side (T: Mounted on the Top side, B: Mounted on the Bottom side)
S.=Surface mount

## [MAIN UNIT]

| REF NO. | PARTS NO. | DESCRIPTION | | M. | H/V LOCATION |
|---|---|---|---|---|---|
| C530 | 4030011600 | S.CER C1608 JB 1E 104K-T | | B | 33.5/98.8 |
| C531 | 4030006880 | S.CER C1608 JB 1H 472K-T | | B | 37.2/94.6 |
| C532 | 4030006880 | S.CER C1608 JB 1H 472K-T | | B | 37.2/91.3 |
| C533 | 4030006880 | S.CER C1608 JB 1H 472K-T | | B | 46.3/95.1 |
| C534 | 4030006880 | S.CER C1608 JB 1H 472K-T | | B | 46.3/82.0 |
| C535 | 4030006880 | S.CER C1608 JB 1H 472K-T | | B | 47.3/88.5 |
| C536 | 4030011600 | S.CER C1608 JB 1E 104K-T | | B | 42.7/91.4 |
| C537 | 4030006880 | S.CER C1608 JB 1H 472K-T | | B | 51.7/82.0 |
| C538 | 4030008920 | S.CER C1608 JB 1H 473K-T | | B | 50.5/85.7 |
| C539 | 4030011600 | S.CER C1608 JB 1E 104K-T | | T | 52.2/84.4 |
| C540 | 4510008540 | S.ELE EEE1CA100SR | | T | 49.1/84.5 |
| C541 | 4030011600 | S.CER C1608 JB 1E 104K-T | | B | 49.9/95.1 |
| C542 | 4030007140 | S.CER C1608 CH 1H 121J-T | [EUR] | B | 55.3/90.7 |
| | 4030007140 | S.CER C1608 CH 1H 121J-T | [FRA] | B | 55.3/90.7 |
| | 4030007140 | S.CER C1608 CH 1H 121J-T | [ITR] | B | 55.3/90.7 |
| | 4030007140 | S.CER C1608 CH 1H 121J-T | [UK] | B | 55.3/90.7 |
| C544 | 4030009530 | S.CER C1608 CH 1H 030B-T | | T | 88.8/94.2 |
| C545 | 4030011600 | S.CER C1608 JB 1E 104K-T | | T | 131.9/108.0 |
| C546 | 4030011340 | S.CER C1608 CH 1H 471J-T | | B | 69.8/90.7 |
| C548 | 4030011600 | S.CER C1608 JB 1E 104K-T | | T | 128.7/102.3 |
| C550 | 4510008540 | S.ELE EEE1CA100SR | | T | 127.4/108.0 |
| C551 | 4030006880 | S.CER C1608 JB 1H 472K-T | | B | 101.6/91.6 |
| C552 | 4030006860 | S.CER C1608 JB 1H 102K-T | | B | 106.4/82.7 |
| C553 | 4030011770 | S.CER C1608 CH 1H 060B-T | | B | 104.8/82.7 |
| C554 | 4030011600 | S.CER C1608 JB 1E 104K-T | | B | 103.0/79.3 |
| C555 | 4030007030 | S.CER C1608 CH 1H 150J-T | | B | 97.9/80.1 |
| C556 | 4030006880 | S.CER C1608 JB 1H 472K-T | | B | 102.9/76.5 |
| C558 | 4030007040 | S.CER C1608 CH 1H 180J-T | | T | 81.9/69.4 |
| C559 | 4030006880 | S.CER C1608 JB 1H 472K-T | | T | 108.4/67.1 |
| C560 | 4030007080 | S.CER C1608 CH 1H 390J-T | | T | 108.4/64.2 |
| C561 | 4030006880 | S.CER C1608 JB 1H 472K-T | | T | 105.0/71.3 |
| C562 | 4030006860 | S.CER C1608 JB 1H 102K-T | | B | 105.6/64.2 |
| C563 | 4030011600 | S.CER C1608 JB 1E 104K-T | | T | 98.8/71.3 |
| C564 | 4030007080 | S.CER C1608 CH 1H 390J-T | | B | 75.9/67.2 |
| C565 | 4030007130 | S.CER C1608 CH 1H 101J-T | | B | 72.5/68.9 |
| C566 | 4030007120 | S.CER C1608 CH 1H 820J-T | | B | 69.5/68.5 |
| C567 | 4030007090 | S.CER C1608 CH 1H 470J-T | | B | 69.5/70.3 |
| C568 | 4030007130 | S.CER C1608 CH 1H 101J-T | | B | 67.1/69.1 |
| C569 | 4030011600 | S.CER C1608 JB 1E 104K-T | | B | 62.8/68.1 |
| C570 | 4030006900 | S.CER C1608 JB 1H 103K-T | | B | 62.9/59.2 |
| C571 | 4030011600 | S.CER C1608 JB 1E 104K-T | | B | 58.8/66.0 |
| C572 | 4030006900 | S.CER C1608 JB 1H 103K-T | | B | 60.0/58.5 |
| C573 | 4030011600 | S.CER C1608 JB 1E 104K-T | | B | 66.7/59.2 |
| C574 | 4030011600 | S.CER C1608 JB 1E 104K-T | | B | 53.3/57.0 |
| C576 | 4610001590 | S.TRI TZC3R100A110R00 (TZC03R100A110) | | T | 95.5/95.9 |
| C577 | 4030011600 | S.CER C1608 JB 1E 104K-T | | B | 54.6/63.0 |
| C578 | 4030007100 | S.CER C1608 CH 1H 560J-T | | B | 91.4/74.5 |
| C579 | 4030006980 | S.CER C1608 CH 1H 070D-T | | B | 89.2/76.8 |
| C580 | 4030007100 | S.CER C1608 CH 1H 560J-T | | B | 93.2/76.5 |
| C581 | 4030007050 | S.CER C1608 CH 1H 220J-T | | B | 22.6/69.5 |
| C582 | 4030007050 | S.CER C1608 CH 1H 220J-T | | T | 20.7/84.6 |
| C583 | 4030011600 | S.CER C1608 JB 1E 104K-T | | T | 27.2/81.6 |
| C584 | 4030009650 | S.CER C1608 CH 1H 240J-T | | B | 104.5/67.3 |
| C585 | 4030006980 | S.CER C1608 CH 1H 070D-T | | B | 102.9/67.3 |
| C586 | 4030007070 | S.CER C1608 CH 1H 330J-T | | B | 98.5/70.2 |
| C587 | 4030007010 | S.CER C1608 CH 1H 100D-T | | B | 97.0/64.9 |
| C588 | 4030007060 | S.CER C1608 CH 1H 270J-T | | B | 96.5/70.2 |
| C589 | 4030007020 | S.CER C1608 CH 1H 120J-T | | B | 63.8/72.8 |
| C590 | 4030007100 | S.CER C1608 CH 1H 560J-T | | B | 62.1/74.5 |
| C601 | 4030006860 | S.CER C1608 JB 1H 102K-T | | B | 40.9/52.4 |
| C602 | 4030006860 | S.CER C1608 JB 1H 102K-T | | B | 42.7/52.4 |
| C603 | 4030011600 | S.CER C1608 JB 1E 104K-T | | B | 40.9/49.1 |
| C604 | 4030007140 | S.CER C1608 CH 1H 121J-T | | B | 38.1/49.8 |
| C605 | 4030010760 | S.CER C1608 CH 1H 331J-T | | B | 38.1/48.0 |
| C606 | 4030007160 | S.CER C1608 CH 1H 181J-T | | B | 33.8/45.5 |
| C607 | 4030007060 | S.CER C1608 CH 1H 270J-T | | B | 35.6/45.5 |
| C608 | 4030010760 | S.CER C1608 CH 1H 331J-T | | B | 38.1/46.2 |
| C609 | 4030007090 | S.CER C1608 CH 1H 470J-T | | B | 38.1/40.8 |
| C610 | 4030007160 | S.CER C1608 CH 1H 181J-T | | B | 35.6/41.5 |
| C611 | 4030007060 | S.CER C1608 CH 1H 270J-T | | B | 33.8/41.5 |
| C612 | 4030007140 | S.CER C1608 CH 1H 121J-T | | B | 38.1/37.1 |
| C613 | 4030010760 | S.CER C1608 CH 1H 331J-T | | B | 38.1/39.0 |
| C614 | 4030006860 | S.CER C1608 JB 1H 102K-T | | B | 40.9/34.5 |
| C615 | 4030011600 | S.CER C1608 JB 1E 104K-T | | B | 40.9/37.8 |
| C616 | 4030006860 | S.CER C1608 JB 1H 102K-T | | B | 42.7/34.5 |
| C617 | 4030010040 | S.CER C1608 JB 1H 561K-T | | B | 51.7/52.4 |
| C618 | 4030010760 | S.CER C1608 CH 1H 331J-T | | B | 53.5/52.4 |
| C619 | 4030011600 | S.CER C1608 JB 1E 104K-T | | B | 51.7/49.1 |
| C620 | 4030010760 | S.CER C1608 CH 1H 331J-T | | B | 48.9/49.8 |
| C621 | 4030007080 | S.CER C1608 CH 1H 390J-T | | B | 48.9/48.0 |
| C622 | 4030007080 | S.CER C1608 CH 1H 390J-T | | B | 44.5/45.5 |
| C623 | 4030010760 | S.CER C1608 CH 1H 331J-T | | B | 46.4/45.5 |
| C624 | 4030007090 | S.CER C1608 CH 1H 470J-T | | B | 48.9/46.2 |
| C625 | 4030010760 | S.CER C1608 CH 1H 331J-T | | B | 48.9/40.8 |
| C626 | 4030007080 | S.CER C1608 CH 1H 390J-T | | B | 46.4/41.5 |
| C627 | 4030010760 | S.CER C1608 CH 1H 331J-T | | B | 44.6/41.5 |
| C628 | 4030007080 | S.CER C1608 CH 1H 390J-T | | B | 48.9/37.1 |
| C629 | 4030010760 | S.CER C1608 CH 1H 331J-T | | B | 48.9/39.0 |
| C630 | 4030010760 | S.CER C1608 CH 1H 331J-T | | B | 51.7/34.5 |
| C631 | 4030011600 | S.CER C1608 JB 1E 104K-T | | B | 51.7/37.8 |
| C632 | 4030010040 | S.CER C1608 JB 1H 561K-T | | B | 53.5/34.5 |
| C633 | 4030010040 | S.CER C1608 JB 1H 561K-T | | B | 62.5/52.4 |
| C634 | 4030011330 | S.CER C1608 CH 1H 391J-T | | B | 64.3/52.4 |
| C635 | 4030011600 | S.CER C1608 JB 1E 104K-T | | B | 62.5/49.1 |
| C636 | 4030007160 | S.CER C1608 CH 1H 181J-T | | B | 59.7/49.8 |
| C637 | 4030007070 | S.CER C1608 CH 1H 330J-T | | B | 59.7/48.0 |
| C638 | 4030007030 | S.CER C1608 CH 1H 150J-T | | B | 55.4/45.5 |
| C639 | 4030007120 | S.CER C1608 CH 1H 820J-T | | B | 57.2/45.5 |
| C640 | 4030007100 | S.CER C1608 CH 1H 560J-T | | B | 59.7/46.2 |
| C641 | 4030007140 | S.CER C1608 CH 1H 121J-T | | B | 59.7/40.8 |
| C642 | 4030007030 | S.CER C1608 CH 1H 150J-T | | B | 57.2/41.5 |
| C643 | 4030007120 | S.CER C1608 CH 1H 820J-T | | B | 55.4/41.5 |
| C644 | 4030007070 | S.CER C1608 CH 1H 330J-T | | B | 59.7/37.1 |
| C645 | 4030007160 | S.CER C1608 CH 1H 181J-T | | B | 59.7/39.0 |

## [MAIN UNIT]

| REF NO. | PARTS NO. | DESCRIPTION | | M. | H/V LOCATION |
|---|---|---|---|---|---|
| C646 | 4030011330 | S.CER C1608 CH 1H 391J-T | | B | 62.5/34.5 |
| C647 | 4030011600 | S.CER C1608 JB 1E 104K-T | | B | 62.5/37.8 |
| C648 | 4030017800 | S.CER C1608 CH 1H 561J-T | | B | 64.3/34.5 |
| C649 | 4030010760 | S.CER C1608 CH 1H 331J-T | | B | 73.4/52.4 |
| C650 | 4030007150 | S.CER C1608 CH 1H 151J-T | | B | 75.2/52.4 |
| C651 | 4030011600 | S.CER C1608 JB 1E 104K-T | | B | 73.4/49.1 |
| C652 | 4030007150 | S.CER C1608 CH 1H 151J-T | | B | 70.5/49.8 |
| C653 | 4030007060 | S.CER C1608 CH 1H 270J-T | | B | 70.5/48.0 |
| C654 | 4030007060 | S.CER C1608 CH 1H 270J-T | | B | 66.2/45.5 |
| C655 | 4030007140 | S.CER C1608 CH 1H 121J-T | | B | 68.0/45.5 |
| C656 | 4030007010 | S.CER C1608 CH 1H 100D-T | | B | 70.5/46.2 |
| C657 | 4030007150 | S.CER C1608 CH 1H 151J-T | | B | 70.5/40.8 |
| C658 | 4030007060 | S.CER C1608 CH 1H 270J-T | | B | 68.0/41.5 |
| C659 | 4030007140 | S.CER C1608 CH 1H 121J-T | | B | 66.2/41.5 |
| C660 | 4030007060 | S.CER C1608 CH 1H 270J-T | | B | 70.5/37.1 |
| C661 | 4030007150 | S.CER C1608 CH 1H 151J-T | | B | 70.5/39.0 |
| C662 | 4030007150 | S.CER C1608 CH 1H 151J-T | | B | 73.3/34.5 |
| C663 | 4030011600 | S.CER C1608 JB 1E 104K-T | | B | 73.3/37.8 |
| C664 | 4030010760 | S.CER C1608 CH 1H 331J-T | | B | 75.2/34.5 |
| C665 | 4030007170 | S.CER C1608 CH 1H 221J-T | | B | 84.2/52.4 |
| C666 | 4030007170 | S.CER C1608 CH 1H 221J-T | | B | 86.0/52.4 |
| C667 | 4030011600 | S.CER C1608 JB 1E 104K-T | | B | 84.2/49.1 |
| C668 | 4030007130 | S.CER C1608 CH 1H 101J-T | | B | 81.4/49.8 |
| C669 | 4030007050 | S.CER C1608 CH 1H 220J-T | | B | 81.4/48.0 |
| C670 | 4030007080 | S.CER C1608 CH 1H 390J-T | | B | 77.1/45.5 |
| C671 | 4030007070 | S.CER C1608 CH 1H 330J-T | | B | 78.9/45.5 |
| C672 | 4030007050 | S.CER C1608 CH 1H 220J-T | | B | 81.4/40.8 |
| C673 | 4030007120 | S.CER C1608 CH 1H 820J-T | | B | 81.4/46.2 |
| C674 | 4030007080 | S.CER C1608 CH 1H 390J-T | | B | 78.9/41.5 |
| C675 | 4030007070 | S.CER C1608 CH 1H 330J-T | | B | 77.1/41.5 |
| C676 | 4030007050 | S.CER C1608 CH 1H 220J-T | | B | 81.4/37.1 |
| C677 | 4030007130 | S.CER C1608 CH 1H 101J-T | | B | 81.4/39.0 |
| C678 | 4030007170 | S.CER C1608 CH 1H 221J-T | | B | 84.2/34.5 |
| C679 | 4030011600 | S.CER C1608 JB 1E 104K-T | | B | 84.2/37.8 |
| C680 | 4030007170 | S.CER C1608 CH 1H 221J-T | | B | 86.0/34.5 |
| C681 | 4030007170 | S.CER C1608 CH 1H 221J-T | | T | 34.3/50.7 |
| C682 | 4030007110 | S.CER C1608 CH 1H 680J-T | | T | 35.6/50.7 |
| C683 | 4030011600 | S.CER C1608 JB 1E 104K-T | | T | 35.6/47.9 |
| C684 | 4030007090 | S.CER C1608 CH 1H 470J-T | | T | 38.3/47.1 |
| C685 | 4030007090 | S.CER C1608 CH 1H 470J-T | | T | 38.3/45.8 |
| C686 | 4030007070 | S.CER C1608 CH 1H 330J-T | | T | 40.4/46.4 |
| C687 | 4030007070 | S.CER C1608 CH 1H 330J-T | | T | 41.7/46.4 |
| C688 | 4030007010 | S.CER C1608 CH 1H 100D-T | | T | 36.1/43.5 |
| C689 | 4030007120 | S.CER C1608 CH 1H 820J-T | | T | 37.4/43.5 |
| C690 | 4030007070 | S.CER C1608 CH 1H 330J-T | | T | 41.7/40.5 |
| C691 | 4030007070 | S.CER C1608 CH 1H 330J-T | | T | 40.4/40.5 |
| C692 | 4030007090 | S.CER C1608 CH 1H 470J-T | | T | 37.8/41.0 |
| C693 | 4030007090 | S.CER C1608 CH 1H 470J-T | | T | 37.8/39.7 |
| C694 | 4030007110 | S.CER C1608 CH 1H 680J-T | | T | 34.3/36.2 |
| C695 | 4030011600 | S.CER C1608 JB 1E 104K-T | | T | 35.6/39.0 |
| C696 | 4030007050 | S.CER C1608 CH 1H 220J-T | | T | 35.6/36.2 |
| C697 | 4030007160 | S.CER C1608 CH 1H 181J-T | | T | 44.1/51.5 |
| C698 | 4030007090 | S.CER C1608 CH 1H 470J-T | | T | 44.1/50.2 |
| C699 | 4030011600 | S.CER C1608 JB 1E 104K-T | | T | 44.6/47.9 |
| C700 | 4030007090 | S.CER C1608 CH 1H 470J-T | | T | 46.8/47.1 |
| C701 | 4030007040 | S.CER C1608 CH 1H 180J-T | | T | 46.8/45.8 |
| C702 | 4030007030 | S.CER C1608 CH 1H 150J-T | | T | 49.3/46.4 |
| C703 | 4030007050 | S.CER C1608 CH 1H 220J-T | | T | 50.7/46.4 |
| C704 | 4030006990 | S.CER C1608 CH 1H 080D-T | | T | 46.4/43.5 |
| C705 | 4030007090 | S.CER C1608 CH 1H 470J-T | | T | 45.1/43.5 |
| C706 | 4030007030 | S.CER C1608 CH 1H 150J-T | | T | 49.3/40.5 |
| C707 | 4030007050 | S.CER C1608 CH 1H 220J-T | | T | 50.7/40.5 |
| C708 | 4030007040 | S.CER C1608 CH 1H 180J-T | | T | 46.8/41.0 |
| C709 | 4030007090 | S.CER C1608 CH 1H 470J-T | | T | 46.8/39.7 |
| C710 | 4030007090 | S.CER C1608 CH 1H 470J-T | | T | 43.3/36.2 |
| C711 | 4030011600 | S.CER C1608 JB 1E 104K-T | | T | 44.6/39.0 |
| C712 | 4030007160 | S.CER C1608 CH 1H 181J-T | | T | 44.6/36.2 |
| C713 | 4030007140 | S.CER C1608 CH 1H 121J-T | | T | 53.6/50.7 |
| C714 | 4030007040 | S.CER C1608 CH 1H 180J-T | | T | 52.3/50.7 |
| C715 | 4030011600 | S.CER C1608 JB 1E 104K-T | | T | 53.6/47.9 |
| C716 | 4030007070 | S.CER C1608 CH 1H 330J-T | | T | 55.8/47.1 |
| C717 | 4030007040 | S.CER C1608 CH 1H 180J-T | | T | 55.8/45.8 |
| C718 | 4030007010 | S.CER C1608 CH 1H 100D-T | | T | 58.4/46.4 |
| C719 | 4030007070 | S.CER C1608 CH 1H 330J-T | | T | 59.7/46.4 |
| C720 | 4030007010 | S.CER C1608 CH 1H 100D-T | | T | 54.1/43.5 |
| C721 | 4030007090 | S.CER C1608 CH 1H 470J-T | | T | 55.4/43.5 |
| C722 | 4030007010 | S.CER C1608 CH 1H 100D-T | | T | 58.4/40.5 |
| C723 | 4030007070 | S.CER C1608 CH 1H 330J-T | | T | 59.7/40.5 |
| C724 | 4030007040 | S.CER C1608 CH 1H 180J-T | | T | 55.8/41.0 |
| C725 | 4030007070 | S.CER C1608 CH 1H 330J-T | | T | 55.8/39.7 |
| C726 | 4030007040 | S.CER C1608 CH 1H 180J-T | | T | 52.3/36.2 |
| C727 | 4030011600 | S.CER C1608 JB 1E 104K-T | | T | 53.6/39.0 |
| C728 | 4030007140 | S.CER C1608 CH 1H 121J-T | | T | 53.6/36.2 |
| C729 | 4030007130 | S.CER C1608 CH 1H 101J-T | | T | 62.6/50.7 |
| C730 | 4030007030 | S.CER C1608 CH 1H 150J-T | | T | 61.3/50.7 |
| C731 | 4030011600 | S.CER C1608 JB 1E 104K-T | | T | 62.6/47.9 |
| C732 | 4030007050 | S.CER C1608 CH 1H 220J-T | | T | 64.8/47.1 |
| C733 | 4030007020 | S.CER C1608 CH 1H 120J-T | | T | 64.8/45.8 |
| C734 | 4030009500 | S.CER C1608 CH 1H 0R5B-T | | T | 67.4/46.4 |
| C735 | 4030007050 | S.CER C1608 CH 1H 220J-T | | T | 68.7/46.4 |
| C736 | 4030006980 | S.CER C1608 CH 1H 070D-T | | T | 63.1/43.5 |
| C737 | 4030007050 | S.CER C1608 CH 1H 220J-T | | T | 64.4/43.5 |
| C738 | 4030009500 | S.CER C1608 CH 1H 0R5B-T | | T | 67.4/40.5 |
| C739 | 4030007050 | S.CER C1608 CH 1H 220J-T | | T | 68.7/40.5 |
| C740 | 4030007020 | S.CER C1608 CH 1H 120J-T | | T | 64.8/41.0 |
| C741 | 4030007050 | S.CER C1608 CH 1H 220J-T | | T | 64.8/39.7 |
| C742 | 4030007030 | S.CER C1608 CH 1H 150J-T | | T | 61.3/36.2 |
| C743 | 4030011600 | S.CER C1608 JB 1E 104K-T | | T | 62.6/39.0 |
| C744 | 4030007130 | S.CER C1608 CH 1H 101J-T | | T | 62.6/36.2 |
| C745 | 4030007140 | S.CER C1608 CH 1H 121J-T | | T | 73.5/49.6 |
| C747 | 4030011600 | S.CER C1608 JB 1E 104K-T | | T | 71.5/48.8 |
| C749 | 4030009550 | S.CER C1608 CH 1H 2R5B-T | | T | 75.9/46.2 |
| C750 | 4030011770 | S.CER C1608 CH 1H 060B-T | | T | 73.8/46.9 |
| C751 | 4030007010 | S.CER C1608 CH 1H 100D-T | | T | 73.8/45.5 |
| C755 | 4030009550 | S.CER C1608 CH 1H 2R5B-T | | T | 75.9/41.0 |

Eqv.= This component is equivalent to the REF No. component listed above, and may be substituted on parts orders and repairs.

M.=Mounted side (T: Mounted on the Top side, B: Mounted on the Bottom side)
S.=Surface mount

## [MAIN UNIT]

| REF NO. | PARTS NO. | DESCRIPTION | M. | H/V LOCATION |
|---|---|---|---|---|
| C756 | 4030011770 | S.CER C1608 CH 1H 060B-T | T | 73.8/40.2 |
| C758 | 4030011600 | S.CER C1608 JB 1E 104K-T | T | 71.5/38.1 |
| C759 | 4030007140 | S.CER C1608 CH 1H 121J-T | T | 73.5/37.3 |
| C760 | 4030011770 | S.CER C1608 CH 1H 060B-T | T | 73.8/48.2 |
| C761 | 4030011770 | S.CER C1608 CH 1H 060B-T | T | 73.8/41.8 |
| C801 | 4030006880 | S.CER C1608 JB 1H 472K-T | T | 37.2/20.6 |
| C802 | 4030011600 | S.CER C1608 JB 1E 104K-T | T | 37.2/27.5 |
| C803 | 4030011600 | S.CER C1608 JB 1E 104K-T | B | 37.2/20.5 |
| C804 | 4030011600 | S.CER C1608 JB 1E 104K-T | T | 46.9/19.9 |
| C805 | 4030011600 | S.CER C1608 JB 1E 104K-T | B | 52.0/24.6 |
| C806 | 4030006900 | S.CER C1608 JB 1H 103K-T | B | 48.5/23.7 |
| C807 | 4030011600 | S.CER C1608 JB 1E 104K-T | T | 48.5/23.9 |
| C812 | 4030006900 | S.CER C1608 JB 1H 103K-T | B | 86.2/84.7 |
| C813 | 4030006880 | S.CER C1608 JB 1H 472K-T | T | 31.2/27.5 |
| C814 | 4030012600 | S.CER C2012 JB 1A 105M-T | T | 27.7/25.5 |
| C815 | 4030006990 | S.CER C1608 CH 1H 080D-T | B | 44.3/21.0 |
| C816 | 4030012600 | S.CER C2012 JB 1A 105M-T | T | 31.0/29.1 |
| C817 | 4030011330 | S.CER C1608 CH 1H 391J-T | T | 85.3/55.1 |
| C818 | 4030017810 | S.CER C1608 CH 1H 102J-T | T | 83.3/53.3 |
| C819 | 4030009920 | S.CER C1608 CH 1H 050B-T | T | 83.3/55.9 |
| C820 | 4030006900 | S.CER C1608 JB 1H 103K-T | T | 74.7/62.2 |
| C821 | 4030011600 | S.CER C1608 JB 1E 104K-T | T | 87.5/62.8 |
| C822 | 4030011600 | S.CER C1608 JB 1E 104K-T | T | 78.4/58.7 |
| C823 | 4030012600 | S.CER C2012 JB 1A 105M-T | T | 86.2/51.5 |
| C824 | 4030006900 | S.CER C1608 JB 1H 103K-T | T | 83.6/49.8 |
| C825 | 4030008880 | S.CER C1608 JB 1H 223K-T | T | 84.4/47.8 |
| C826 | 4030008850 | S.CER C1608 JB 1H 123K-T | T | 82.3/46.8 |
| C827 | 4030008850 | S.CER C1608 JB 1H 123K-T | T | 82.3/45.5 |
| C828 | 4030006900 | S.CER C1608 JB 1H 103K-T | T | 85.7/42.7 |
| C829 | 4030008860 | S.CER C1608 JB 1H 153K-T | T | 82.3/42.7 |
| C830 | 4030008860 | S.CER C1608 JB 1H 153K-T | T | 82.3/41.4 |
| C831 | 4030008650 | S.CER C1608 JB 1H 332K-T | T | 84.4/39.8 |
| C832 | 4030006900 | S.CER C1608 JB 1H 103K-T | T | 82.3/39.6 |
| C833 | 4030006900 | S.CER C1608 JB 1H 103K-T | T | 82.3/38.3 |
| C834 | 4030012600 | S.CER C2012 JB 1A 105M-T | T | 82.1/35.4 |
| C835 | 4030011600 | S.CER C1608 JB 1E 104K-T | T | 82.3/37.0 |
| C836 | 4030009920 | S.CER C1608 CH 1H 050B-T | T | 89.5/58.0 |
| C837 | 4550007500 | S.TAN F931D106MBABMA | T | 73.0/58.7 |
| Eqv. | 4550006470 | S.TAN TEESVB2 1D 106M8R | | |
| C838 | 4550007500 | S.TAN F931D106MBABMA | T | 91.9/61.7 |
| Eqv. | 4550006470 | S.TAN TEESVB2 1D 106M8R | | |
| C839 | 4030006880 | S.CER C1608 JB 1H 472K-T | B | 85.3/74.2 |
| C840 | 4030011600 | S.CER C1608 JB 1E 104K-T | B | 86.0/81.4 |
| C841 | 4030006880 | S.CER C1608 JB 1H 472K-T | B | 81.2/78.3 |
| C845 | 4030011600 | S.CER C1608 JB 1E 104K-T | T | 35.3/69.8 |
| C846 | 4030011600 | S.CER C1608 JB 1E 104K-T | T | 38.1/74.7 |
| C847 | 4510008540 | S.ELE EEE1CA100SR | T | 37.1/77.8 |
| C901 | 4030006880 | S.CER C1608 JB 1H 472K-T | B | 125.3/1.8 |
| C902 | 4030006880 | S.CER C1608 JB 1H 472K-T | T | 124.3/1.8 |
| C903 | 4030006880 | S.CER C1608 JB 1H 472K-T | B | 123.3/1.8 |
| C904 | 4030006880 | S.CER C1608 JB 1H 472K-T | T | 122.3/1.8 |
| C905 | 4030006880 | S.CER C1608 JB 1H 472K-T | B | 121.3/1.9 |
| C906 | 4030006880 | S.CER C1608 JB 1H 472K-T | T | 120.3/1.8 |
| C907 | 4030006880 | S.CER C1608 JB 1H 472K-T | B | 119.3/1.9 |
| C908 | 4030006880 | S.CER C1608 JB 1H 472K-T | T | 118.3/1.8 |
| C909 | 4030006880 | S.CER C1608 JB 1H 472K-T | B | 117.3/1.9 |
| C922 | 4030006880 | S.CER C1608 JB 1H 472K-T | T | 123.8/19.0 |
| C923 | 4030006880 | S.CER C1608 JB 1H 472K-T | B | 122.8/19.5 |
| C924 | 4030006880 | S.CER C1608 JB 1H 472K-T | T | 121.8/19.0 |
| C925 | 4030006880 | S.CER C1608 JB 1H 472K-T | B | 120.8/19.5 |
| C926 | 4030006880 | S.CER C1608 JB 1H 472K-T | T | 119.8/19.0 |
| C927 | 4030006880 | S.CER C1608 JB 1H 472K-T | B | 118.8/19.5 |
| C928 | 4030006880 | S.CER C1608 JB 1H 472K-T | T | 117.8/19.0 |
| C929 | 4030006880 | S.CER C1608 JB 1H 472K-T | B | 116.8/19.5 |
| C930 | 4030006880 | S.CER C1608 JB 1H 472K-T | T | 115.8/19.0 |
| C932 | 4030006880 | S.CER C1608 JB 1H 472K-T | T | 113.8/19.0 |
| C933 | 4030006880 | S.CER C1608 JB 1H 472K-T | B | 112.8/19.5 |
| C934 | 4030006880 | S.CER C1608 JB 1H 472K-T | T | 111.8/19.0 |
| C936 | 4030006880 | S.CER C1608 JB 1H 472K-T | T | 109.8/19.0 |
| C937 | 4030006880 | S.CER C1608 JB 1H 472K-T | B | 108.8/19.5 |
| C945 | 4030006880 | S.CER C1608 JB 1H 472K-T | B | 89.4/1.8 |
| C946 | 4030006880 | S.CER C1608 JB 1H 472K-T | T | 88.4/1.8 |
| C947 | 4030006880 | S.CER C1608 JB 1H 472K-T | B | 87.4/1.8 |
| C948 | 4030006880 | S.CER C1608 JB 1H 472K-T | T | 86.4/1.8 |
| C952 | 4030006880 | S.CER C1608 JB 1H 472K-T | T | 82.4/1.8 |
| C953 | 4030006880 | S.CER C1608 JB 1H 472K-T | B | 81.4/1.8 |
| C954 | 4030006880 | S.CER C1608 JB 1H 472K-T | T | 80.4/1.8 |
| C955 | 4030006880 | S.CER C1608 JB 1H 472K-T | B | 79.4/1.8 |
| C957 | 4030006880 | S.CER C1608 JB 1H 472K-T | B | 77.4/1.8 |
| C958 | 4030006880 | S.CER C1608 JB 1H 472K-T | T | 76.4/1.9 |
| C974 | 4030006880 | S.CER C1608 JB 1H 472K-T | T | 79.9/19.4 |
| C975 | 4030006880 | S.CER C1608 JB 1H 472K-T | B | 78.9/19.4 |
| C976 | 4030006880 | S.CER C1608 JB 1H 472K-T | T | 77.9/19.4 |
| C977 | 4030006880 | S.CER C1608 JB 1H 472K-T | B | 76.9/19.4 |
| C978 | 4030006880 | S.CER C1608 JB 1H 472K-T | T | 75.9/19.4 |
| C979 | 4030006880 | S.CER C1608 JB 1H 472K-T | B | 74.9/19.4 |
| C980 | 4030006880 | S.CER C1608 JB 1H 472K-T | T | 12.8/30.0 |
| C981 | 4030006880 | S.CER C1608 JB 1H 472K-T | T | 126.3/1.8 |
| RL50 | 6330001940 | REL EDR0011A0900Z <SLVJ> | | |
| RL140 | 6330001430 | REL NA-12W-K | | |
| RL141 | 6330001430 | REL NA-12W-K | | |
| CP81 | 6910009670 | S.CHE HK3-S-T | T | 129.3/16.1 |
| CP82 | 6910009670 | S.CHE HK3-S-T | T | 116.4/75.1 |
| CP495 | 6910009670 | S.CHE HK3-S-T | T | 129.1/5.8 |
| CP496 | 6910009670 | S.CHE HK3-S-T | T | 107.1/5.8 |
| J1 | 6510023671 | CON TCS4480-0141577 | | |
| J2 | 6510023661 | CON TCS4470-0141577 | | |
| J3 | 6510023671 | CON TCS4480-0141577 | | |
| J4 | 6510023661 | CON TCS4470-0141577 | | |

## [MAIN UNIT]

| REF NO. | PARTS NO. | DESCRIPTION | M. | H/V LOCATION |
|---|---|---|---|---|
| J5 | 6450001130 | CON JPJ2042-01-110 | | |
| J6 | 6510023730 | CON LGY6502-0600C | | |
| J7 | 6510023730 | CON LGY6502-0600C | | |
| J8 | 6510023740 | CON LGR4609-7000 | | |
| J9 | 6510024940 | CON HEC2305-016250 | | |
| J140 | 6510023720 | CON LGY6501-0600C | | |
| J141 | 6510023720 | CON LGY6501-0600C | | |
| J142 | 6510018961 | S.CON B2B-PH-SM4-TB(LF)(SN) | T | 256.2/96.5 |
| J340 | 6510022811 | CON IMSA-9180B-22B-PT1 | | |
| J341 | 6510021651 | CON IMSA-9180B-30B-PT1 | | |
| J360 | 6510022811 | CON IMSA-9180B-22B-PT1 | | |
| J361 | 6510021651 | CON IMSA-9180B-30B-PT1 | | |
| J380 | 6510022811 | CON IMSA-9180B-22B-PT1 | | |
| J381 | 6510021651 | CON IMSA-9180B-30B-PT1 | | |
| J399 | 6510028210 | CON SJ050010 (TMP-J01X-V6) | | |
| J400 | 6510019981 | S.CON 52808-1671(1690) | T | 232.8/5.0 |
| J401 | 6510022191 | S.CON B3B-PH-SM4-TB(LF)(SN) | T | 232.7/98.9 |
| J403 | 6510019981 | S.CON 52808-1671(1690) | T | 32.6/5.0 |
| J404 | 6510022191 | S.CON B3B-PH-SM4-TB(LF)(SN) | T | 143.8/115.4 |
| J410 | 6510020001 | S.CON 52808-3071(3090) | T | 5.6/42.5 |
| J411 | 6510019971 | S.CON 52808-1071 | T | 5.6/98.7 |
| J430 | 6510022311 | S.CON B5B-PH-SM4-TB(LF)(SN) | T | 5.0/73.0 |
| J440 | 6510018921 | S.CON B8B-PH-SM4-TB(LF)(SN) | T | 154.5/5.0 |
| J450 | 6510003471 | CON B11B-EH-S(LF)(SN) | | |
| J451 | 6510018941 | S.CON B13B-PH-SM4-TB(LF)(SN) | T | 184.2/5.0 |
| J490 | 6510023751 | CON 01K1971-20 | | |
| J491 | 6510028210 | CON SJ050010 (TMP-J01X-V6) | | |
| J492 | 6510014961 | S.CON B2B-ZR-SM4-TF(LF)(SN) | T | 202.6/11.5 |
| J495 | 6510029420 | CON PLR135/T8 | | |
| J496 | 6510029430 | CON PLT133/T8 | | |
| J501 | 6510028210 | CON SJ050010 (TMP-J01X-V6) | | |
| J502 | 6510028210 | CON SJ050010 (TMP-J01X-V6) | | |
| J503 | 6510028210 | CON SJ050010 (TMP-J01X-V6) | | |
| J801 | 6510028210 | CON SJ050010 (TMP-J01X-V6) | | |
| J802 | 6510028210 | CON SJ050010 (TMP-J01X-V6) | | |
| J808 | 6510028210 | CON SJ050010 (TMP-J01X-V6) | | |
| J900 | 6510022472 | S.CON 40FLT-SM2-TB(LF)(SN)(M) | T | 116.5/10.6 |
| J901 | 6510015541 | S.CON B4B-ZR-SM4-TF(LF)(SN) | T | 9.2/113.0 |
| J940 | 6510022472 | S.CON 40FLT-SM2-TB(LF)(SN)(M) | T | 84.6/10.6 |
| F1 | 5220000230 | HOL S-N5054 #01 | | |
| F2 | 5220000230 | HOL S-N5054 #01 | | |
| F3 | 5210000041 | FUS FGB 2A PBF (FGB0 125V) | | |
| W1 | 9024801019 | JUM 74/98/020/X98/X98 | | |
| EP50 | 6910012350 | S.BEA MMZ1608Y 102BT | B | 78.1/126.8 |
| EP51 | 6910012350 | S.BEA MMZ1608Y 102BT | B | 95.6/118.7 |
| EP52 | 6910012350 | S.BEA MMZ1608Y 102BT | B | 90.1/126.1 |
| EP403 | 6910012350 | S.BEA MMZ1608Y 102BT | T | 233.3/10.4 |
| EP404 | 6910012350 | S.BEA MMZ1608Y 102BT | T | 232.0/10.4 |
| EP408 | 6910012350 | S.BEA MMZ1608Y 102BT | T | 32.1/10.0 |
| EP409 | 6910012350 | S.BEA MMZ1608Y 102BT | T | 30.8/10.0 |
| EP414 | 6910012350 | S.BEA MMZ1608Y 102BT | T | 9.9/34.0 |
| EP415 | 6910012350 | S.BEA MMZ1608Y 102BT | B | 9.9/31.0 |
| EP416 | 6910012350 | S.BEA MMZ1608Y 102BT | B | 10.2/95.0 |
| EP417 | 6910012350 | S.BEA MMZ1608Y 102BT | T | 10.2/96.2 |
| EP420 | 6910012350 | S.BEA MMZ1608Y 102BT | B | 10.1/101.2 |
| EP421 | 6910012350 | S.BEA MMZ1608Y 102BT | T | 10.1/102.2 |
| EP430 | 6910012350 | S.BEA MMZ1608Y 102BT | B | 5.8/69.0 |
| EP431 | 6910012350 | S.BEA MMZ1608Y 102BT | B | 5.8/71.0 |
| EP432 | 6910012350 | S.BEA MMZ1608Y 102BT | B | 5.8/73.0 |
| EP901 | 6910015970 | S.BEA MMZ1608B 301CT-AS | B | 106.8/15.4 |
| EP905 | 6910012350 | S.BEA MMZ1608Y 102BT | B | 121.3/5.8 |
| EP907 | 6910012350 | S.BEA MMZ1608Y 102BT | B | 119.3/5.8 |

Eqv.= This component is equivalent to the REF No. component listed above, and may be substituted on parts orders and repairs.

M.=Mounted side (T: Mounted on the Top side, B: Mounted on the Bottom side)
S.=Surface mount

## [DSP-A UNIT]

| REF NO. | PARTS NO. | DESCRIPTION | | M. | H/V LOCATION |
|---|---|---|---|---|---|
| IC1 | 1140012211 | S.IC | TMS320C6713BZDP225 <FE> | T | 28.1/20.5 |
| IC151 | 1130008361 | S.IC | TC7SHU04FU(TE85LJF) | B | 45.6/8.1 |
| IC171 | 1130008041 | S.IC | TC7SH04FU(TE85LJF) | T | 41.4/4.7 |
| IC181 | 1130011151 | S.IC | SN74AHC2G08HDCT3 | T | 30.2/2.0 |
| IC191 | 1130011151 | S.IC | SN74AHC2G08HDCT3 | T | 24.0/3.6 |
| IC201 | 1130013493 | S.IC | AT29LV040A-15TU(SX-2590E-12) | B | 29.0/42.0 |
| IC203 | 1110006411 | S.IC | R3111N111A-TR-F | T | 30.1/36.5 |
| IC301 | 1110006100 | S.IC | NJM5534MD-TE1-#ZZZB | T | 72.4/44.8 |
| IC331 | 1130009981 | S.IC | TC7W53FK(TE85LF) | T | 76.9/34.1 |
| IC341 | 1110006100 | S.IC | NJM5534MD-TE1-#ZZZB | T | 70.3/35.6 |
| IC371 | 1110006100 | S.IC | NJM5534MD-TE1-#ZZZB | T | 59.5/44.4 |
| IC401 | 1110006111 | S.IC | AK5394AVSP/P | T | 54.3/31.0 |
| IC451 | 1130006891 | S.IC | TC7S04FU(TE85RF) | T | 43.5/41.0 |
| IC452 | 1130012160 | S.IC | SN74LVC1GU04DCKR | T | 42.8/38.5 |
| IC501 | 1110001901 | S.IC | UPC4570G2-E1-A | T | 71.7/27.5 |
| IC551 | 1130013090 | S.IC | AK4396VFP-E2/P | T | 54.7/7.4 |
| IC601 | 1110006100 | S.IC | NJM5534MD-TE1-#ZZZB | T | 63.7/17.4 |
| IC651 | 1110006100 | S.IC | NJM5534MD-TE1-#ZZZB | T | 66.8/7.3 |
| IC701 | 1110006100 | S.IC | NJM5534MD-TE1-#ZZZB | T | 74.2/17.5 |
| IC771 | 1110004770 | S.IC | BU9480F-E2 | T | 51.7/18.5 |
| Q1 | 1590000680 | S.TRA | DTC114EUA T106 | T | 45.8/16.6 |
| D501 | 1730002321 | S.ZEN | MAZ8051GML | B | 76.5/29.6 |
| FI101 | 2040000790 | S.LC | EXCCET103U | T | 36.5/2.9 |
| X151 | 6050011660 | S.XTA | CR-754 SMD-49 30.000 MHz <KDS> | B | 40.6/2.9 |
| L1 | 6200003950 | S.COI | HF50ACC 322513-T | B | 43.3/34.8 |
| L2 | 6180003501 | S.COI | SLF6028T-100M1R3-PF | B | 13.7/35.8 |
| L3 | 6200003640 | S.COI | MLF1608E 100K-T | B | 12.3/8.2 |
| L401 | 6200003950 | S.COI | HF50ACC 322513-T | T | 49.3/42.9 |
| L921 | 6200003950 | S.COI | HF50ACC 322513-T | T | 73.7/4.4 |
| L922 | 6200003950 | S.COI | HF50ACC 322513-T | T | 78.0/9.5 |
| L924 | 6200003950 | S.COI | HF50ACC 322513-T | T | 74.2/9.6 |
| L925 | 6200003950 | S.COI | HF50ACC 322513-T | T | 77.5/4.4 |
| L961 | 6200003950 | S.COI | HF50ACC 322513-T | B | 11.3/12.2 |
| L962 | 6200003950 | S.COI | HF50ACC 322513-T | B | 12.9/24.6 |
| R1 | 7030003560 | S.RES | ERJ3GEYJ 103 V (10K) | B | 42.6/22.4 |
| R2 | 7030003560 | S.RES | ERJ3GEYJ 103 V (10K) | B | 41.8/24.2 |
| R3 | 7030003560 | S.RES | ERJ3GEYJ 103 V (10K) | B | 42.6/21.1 |
| R4 | 7030003560 | S.RES | ERJ3GEYJ 103 V (10K) | B | 41.8/13.7 |
| R5 | 7030003440 | S.RES | ERJ3GEYJ 102 V (1K) | B | 23.2/6.0 |
| R6 | 7030003440 | S.RES | ERJ3GEYJ 102 V (1K) | B | 21.9/6.0 |
| R7 | 7030003640 | S.RES | ERJ3GEYJ 473 V (47K) | B | 20.1/6.8 |
| R8 | 7030003440 | S.RES | ERJ3GEYJ 102 V (1K) | B | 14.2/8.2 |
| R9 | 7030003640 | S.RES | ERJ3GEYJ 473 V (47K) | B | 14.5/11.7 |
| R10 | 7030003640 | S.RES | ERJ3GEYJ 473 V (47K) | T | 43.8/13.1 |
| R11 | 7030003460 | S.RES | ERJ3GEYJ 152 V (1.5K) | B | 48.2/9.7 |
| R12 | 7030003560 | S.RES | ERJ3GEYJ 103 V (10K) | B | 26.8/13.4 |
| R151 | 7030003320 | S.RES | ERJ3GEYJ 101 V (100) | T | 44.4/5.4 |
| R152 | 7030003800 | S.RES | ERJ3GEYJ 105 V (1M) | B | 43.5/6.2 |
| R171 | 7030003320 | S.RES | ERJ3GEYJ 101 V (100) | T | 41.3/1.4 |
| R181 | 7030003560 | S.RES | ERJ3GEYJ 103 V (10K) | T | 9.2/7.1 |
| R182 | 7030003560 | S.RES | ERJ3GEYJ 103 V (10K) | T | 6.4/7.1 |
| R183 | 7030003560 | S.RES | ERJ3GEYJ 103 V (10K) | T | 11.9/8.4 |
| R184 | 7030003560 | S.RES | ERJ3GEYJ 103 V (10K) | T | 11.9/7.1 |
| R201 | 7030003860 | S.RES | ERJ3GE JPW V | T | 30.9/39.2 |
| R301 | 7030003860 | S.RES | ERJ3GE JPW V | T | 79.6/38.5 |
| R302 | 7030009591 | S.RES | ERA3YED 472V (4.7K) | T | 77.6/46.9 |
| R303 | 7030009591 | S.RES | ERA3YED 472V (4.7K) | T | 75.8/46.2 |
| R304 | 7030003320 | S.RES | ERJ3GEYJ 101 V (100) | T | 78.2/40.8 |
| R305 | 7030003860 | S.RES | ERJ3GE JPW V | T | 75.8/43.6 |
| R306 | 7030003320 | S.RES | ERJ3GEYJ 101 V (100) | T | 69.0/46.2 |
| R331 | 7030003500 | S.RES | ERJ3GEYJ 332 V (3.3K) | T | 64.4/40.0 |
| R332 | 7030003480 | S.RES | ERJ3GEYJ 222 V (2.2K) | T | 65.7/40.0 |
| R333 | 7030003640 | S.RES | ERJ3GEYJ 473 V (47K) | T | 75.0/33.2 |
| R341 | 7030003320 | S.RES | ERJ3GEYJ 101 V (100) | T | 73.7/34.9 |
| R342 | 7030003320 | S.RES | ERJ3GEYJ 101 V (100) | T | 66.9/37.4 |
| R343 | 7030006601 | S.RES | ERA3YED 272V (2.7K) | T | 73.7/37.5 |
| R344 | 7030010390 | S.RES | ERA3YED 821V (820) | T | 65.6/33.7 |
| R345 | 7030009691 | S.RES | ERA3YED 101V (100) | T | 66.3/31.7 |
| R371 | 7030003320 | S.RES | ERJ3GEYJ 101 V (100) | T | 63.4/43.9 |
| R372 | 7030003320 | S.RES | ERJ3GEYJ 101 V (100) | T | 55.3/46.3 |
| R373 | 7030006601 | S.RES | ERA3YED 272V (2.7K) | T | 63.4/45.7 |
| R374 | 7030010390 | S.RES | ERA3YED 821V (820) | T | 54.7/41.9 |
| R375 | 7030009691 | S.RES | ERA3YED 101V (100) | T | 56.1/40.6 |
| R401 | 7030009591 | S.RES | ERA3YED 472V (4.7K) | T | 53.2/42.6 |
| R402 | 7030009591 | S.RES | ERA3YED 472V (4.7K) | T | 51.9/44.1 |
| R403 | 7030003640 | S.RES | ERJ3GEYJ 473 V (47K) | T | 54.2/38.7 |
| R404 | 7030003200 | S.RES | ERJ3GEYJ 100 V (10) | T | 50.1/40.0 |
| R405 | 7030003320 | S.RES | ERJ3GEYJ 101 V (100) | T | 51.1/38.2 |
| R406 | 7030003640 | S.RES | ERJ3GEYJ 473 V (47K) | T | 49.8/38.2 |
| R407 | 7030003460 | S.RES | ERJ3GEYJ 152 V (1.5K) | B | 46.9/36.1 |
| R409 | 7030003640 | S.RES | ERJ3GEYJ 473 V (47K) | T | 52.3/23.9 |
| R410 | 7030003640 | S.RES | ERJ3GEYJ 473 V (47K) | T | 47.3/23.9 |
| R411 | 7030003640 | S.RES | ERJ3GEYJ 473 V (47K) | T | 49.8/23.9 |
| R412 | 7030003520 | S.RES | ERJ3GEYJ 472 V (4.7K) | T | 56.1/22.3 |
| R413 | 7030003520 | S.RES | ERJ3GEYJ 472 V (4.7K) | T | 54.2/21.9 |
| R451 | 7030003800 | S.RES | ERJ3GEYJ 105 V (1M) | T | 42.6/36.6 |
| R501 | 7030006521 | S.RES | ERA3YED 561V (560) | T | 76.2/30.0 |
| R502 | 7030003360 | S.RES | ERJ3GEYJ 221 V (220) | T | 70.4/23.5 |
| R503 | 7030003380 | S.RES | ERJ3GEYJ 331 V (330) | T | 65.3/29.0 |
| R504 | 7030003680 | S.RES | ERJ3GEYJ 104 V (100K) | T | 65.3/27.7 |
| R551 | 7030003320 | S.RES | ERJ3GEYJ 101 V (100) | T | 49.5/8.7 |
| R559 | 7030003640 | S.RES | ERJ3GEYJ 473 V (47K) | T | 59.9/10.6 |

## [DSP-A UNIT]

| REF NO. | PARTS NO. | DESCRIPTION | | M. | H/V LOCATION |
|---|---|---|---|---|---|
| R601 | 7030006521 | S.RES | ERA3YED 561V (560) | T | 63.1/20.8 |
| R602 | 7030007661 | S.RES | ERA3YED 331V (330) | T | 64.1/22.1 |
| R603 | 7030007661 | S.RES | ERA3YED 331V (330) | T | 59.0/19.9 |
| R604 | 7030009961 | S.RES | ERA3YED 221V (220) | T | 68.8/21.0 |
| R605 | 7030007661 | S.RES | ERA3YED 331V (330) | T | 65.7/20.8 |
| R606 | 7030003320 | S.RES | ERJ3GEYJ 101 V (100) | T | 67.2/14.0 |
| R607 | 7030003320 | S.RES | ERJ3GEYJ 101 V (100) | T | 61.9/14.0 |
| R651 | 7030006521 | S.RES | ERA3YED 561V (560) | T | 64.4/10.7 |
| R652 | 7030007661 | S.RES | ERA3YED 331V (330) | T | 65.4/12.0 |
| R653 | 7030007661 | S.RES | ERA3YED 331V (330) | T | 62.2/10.2 |
| R654 | 7030009961 | S.RES | ERA3YED 221V (220) | T | 69.6/10.7 |
| R655 | 7030007661 | S.RES | ERA3YED 331V (330) | T | 67.0/10.7 |
| R658 | 7030003320 | S.RES | ERJ3GEYJ 101 V (100) | T | 67.8/3.9 |
| R659 | 7030003320 | S.RES | ERJ3GEYJ 101 V (100) | T | 64.1/3.9 |
| R701 | 7030010770 | S.RES | ERA3YED 681V (680) | T | 71.4/21.0 |
| R702 | 7030009861 | S.RES | ERA3YED 471V (470) | T | 74.8/22.7 |
| R703 | 7030010770 | S.RES | ERA3YED 681V (680) | T | 70.6/13.6 |
| R704 | 7030009861 | S.RES | ERA3YED 471V (470) | T | 77.3/13.4 |
| R705 | 7030009691 | S.RES | ERA3YED 101V (100) | T | 77.4/22.2 |
| R706 | 7030003320 | S.RES | ERJ3GEYJ 101 V (100) | T | 77.4/20.9 |
| R707 | 7030003320 | S.RES | ERJ3GEYJ 101 V (100) | T | 74.1/14.1 |
| R801 | 7030003650 | S.RES | ERJ3GEYJ 563 V (56K) | T | 78.0/27.2 |
| R802 | 7030003680 | S.RES | ERJ3GEYJ 104 V (100K) | T | 78.0/25.9 |
| R803 | 7030003480 | S.RES | ERJ3GEYJ 222 V (2.2K) | T | 78.8/24.1 |
| R804 | 7030003490 | S.RES | ERJ3GEYJ 272 V (2.7K) | T | 78.0/29.8 |
| R805 | 7030003340 | S.RES | ERJ3GEYJ 151 V (150) | T | 78.0/28.5 |
| R901 | 7030003860 | S.RES | ERJ3GE JPW V | T | 46.7/21.0 |
| R962 | 7030003320 | S.RES | ERJ3GEYJ 101 V (100) | T | 12.1/16.9 |
| R963 | 7030003320 | S.RES | ERJ3GEYJ 101 V (100) | T | 11.9/15.6 |
| R964 | 7030003320 | S.RES | ERJ3GEYJ 101 V (100) | T | 11.9/14.3 |
| R965 | 7030003320 | S.RES | ERJ3GEYJ 101 V (100) | T | 11.9/13.0 |
| R967 | 7030003320 | S.RES | ERJ3GEYJ 101 V (100) | T | 13.7/37.9 |
| R968 | 7030003320 | S.RES | ERJ3GEYJ 101 V (100) | T | 11.9/11.7 |
| R969 | 7030003320 | S.RES | ERJ3GEYJ 101 V (100) | T | 13.7/48.3 |
| R970 | 7030003320 | S.RES | ERJ3GEYJ 101 V (100) | T | 13.7/47.0 |
| R971 | 7030003320 | S.RES | ERJ3GEYJ 101 V (100) | T | 13.7/45.7 |
| R972 | 7030003320 | S.RES | ERJ3GEYJ 101 V (100) | T | 13.7/44.4 |
| R973 | 7030003320 | S.RES | ERJ3GEYJ 101 V (100) | T | 13.7/43.1 |
| R974 | 7030003320 | S.RES | ERJ3GEYJ 101 V (100) | T | 13.7/41.8 |
| R975 | 7030003320 | S.RES | ERJ3GEYJ 101 V (100) | T | 13.7/40.5 |
| R976 | 7030003320 | S.RES | ERJ3GEYJ 101 V (100) | T | 13.7/39.2 |
| C1 | 4030011600 | S.CER | C1608 JB 1E 104K-T | B | 15.3/30.6 |
| C2 | 4030011600 | S.CER | C1608 JB 1E 104K-T | B | 41.8/30.8 |
| C3 | 4030011600 | S.CER | C1608 JB 1E 104K-T | B | 18.1/32.9 |
| C4 | 4030011600 | S.CER | C1608 JB 1E 104K-T | B | 39.4/33.0 |
| C5 | 4030011600 | S.CER | C1608 JB 1E 104K-T | B | 23.1/26.4 |
| C6 | 4030011600 | S.CER | C1608 JB 1E 104K-T | B | 24.4/26.4 |
| C7 | 4030011600 | S.CER | C1608 JB 1E 104K-T | B | 28.7/26.4 |
| C8 | 4030011600 | S.CER | C1608 JB 1E 104K-T | B | 30.0/26.4 |
| C9 | 4030011600 | S.CER | C1608 JB 1E 104K-T | B | 33.9/26.4 |
| C10 | 4030011600 | S.CER | C1608 JB 1E 104K-T | B | 21.5/23.4 |
| C11 | 4030011600 | S.CER | C1608 JB 1E 104K-T | B | 36.0/23.8 |
| C12 | 4030011600 | S.CER | C1608 JB 1E 104K-T | T | 13.7/21.1 |
| C13 | 4030011600 | S.CER | C1608 JB 1E 104K-T | B | 22.3/20.2 |
| C14 | 4030011600 | S.CER | C1608 JB 1E 104K-T | B | 36.0/21.2 |
| C15 | 4030011600 | S.CER | C1608 JB 1E 104K-T | B | 22.3/18.9 |
| C16 | 4030011600 | S.CER | C1608 JB 1E 104K-T | B | 36.0/18.6 |
| C17 | 4030011600 | S.CER | C1608 JB 1E 104K-T | T | 43.6/20.1 |
| C18 | 4030011600 | S.CER | C1608 JB 1E 104K-T | B | 22.3/15.2 |
| C19 | 4030011600 | S.CER | C1608 JB 1E 104K-T | B | 34.7/14.5 |
| C20 | 4030011600 | S.CER | C1608 JB 1E 104K-T | B | 23.2/13.4 |
| C21 | 4030011600 | S.CER | C1608 JB 1E 104K-T | B | 24.5/13.4 |
| C22 | 4030011600 | S.CER | C1608 JB 1E 104K-T | B | 28.1/13.4 |
| C23 | 4030011600 | S.CER | C1608 JB 1E 104K-T | B | 32.6/12.6 |
| C24 | 4030011600 | S.CER | C1608 JB 1E 104K-T | B | 35.3/12.6 |
| C25 | 4030011600 | S.CER | C1608 JB 1E 104K-T | B | 17.3/6.8 |
| C26 | 4030011600 | S.CER | C1608 JB 1E 104K-T | B | 33.1/6.8 |
| C27 | 4030011600 | S.CER | C1608 JB 1E 104K-T | B | 41.8/11.1 |
| C28 | 4030011600 | S.CER | C1608 JB 1E 104K-T | B | 15.5/8.2 |
| C29 | 4030011600 | S.CER | C1608 JB 1E 104K-T | B | 40.9/6.8 |
| C30 | 4030011600 | S.CER | C1608 JB 1E 104K-T | T | 35.2/5.0 |
| C31 | 4030011600 | S.CER | C1608 JB 1E 104K-T | T | 28.5/5.3 |
| C32 | 4030011600 | S.CER | C1608 JB 1E 104K-T | T | 37.8/5.0 |
| C33 | 4030011600 | S.CER | C1608 JB 1E 104K-T | T | 18.5/35.2 |
| C34 | 4030011600 | S.CER | C1608 JB 1E 104K-T | T | 36.5/35.0 |
| C35 | 4030011600 | S.CER | C1608 JB 1E 104K-T | B | 26.1/32.9 |
| C36 | 4030011600 | S.CER | C1608 JB 1E 104K-T | B | 29.4/32.9 |
| C37 | 4030011600 | S.CER | C1608 JB 1E 104K-T | B | 36.8/33.0 |
| C38 | 4030011600 | S.CER | C1608 JB 1E 104K-T | B | 15.3/28.0 |
| C39 | 4030011600 | S.CER | C1608 JB 1E 104K-T | B | 22.4/32.9 |
| C40 | 4030011600 | S.CER | C1608 JB 1E 104K-T | B | 26.1/26.4 |
| C41 | 4030011600 | S.CER | C1608 JB 1E 104K-T | B | 21.8/26.4 |
| C42 | 4030011600 | S.CER | C1608 JB 1E 104K-T | B | 27.4/26.4 |
| C43 | 4030011600 | S.CER | C1608 JB 1E 104K-T | B | 32.6/26.4 |
| C44 | 4030011600 | S.CER | C1608 JB 1E 104K-T | B | 35.2/26.4 |
| C45 | 4030011600 | S.CER | C1608 JB 1E 104K-T | B | 41.8/26.8 |
| C46 | 4030011600 | S.CER | C1608 JB 1E 104K-T | B | 15.4/25.0 |
| C47 | 4030011600 | S.CER | C1608 JB 1E 104K-T | T | 43.6/29.1 |
| C48 | 4030011600 | S.CER | C1608 JB 1E 104K-T | B | 22.3/21.5 |
| C49 | 4030011600 | S.CER | C1608 JB 1E 104K-T | B | 41.8/18.0 |
| C50 | 4030011600 | S.CER | C1608 JB 1E 104K-T | B | 22.3/17.6 |
| C51 | 4030011600 | S.CER | C1608 JB 1E 104K-T | B | 36.0/16.0 |
| C52 | 4030011600 | S.CER | C1608 JB 1E 104K-T | B | 15.8/11.7 |
| C53 | 4030011600 | S.CER | C1608 JB 1E 104K-T | B | 21.9/13.4 |
| C54 | 4030011600 | S.CER | C1608 JB 1E 104K-T | T | 43.0/10.0 |
| C55 | 4030011600 | S.CER | C1608 JB 1E 104K-T | B | 29.4/13.4 |
| C56 | 4030011600 | S.CER | C1608 JB 1E 104K-T | B | 25.1/6.8 |
| C57 | 4030011600 | S.CER | C1608 JB 1E 104K-T | B | 29.8/6.8 |
| C58 | 4030011600 | S.CER | C1608 JB 1E 104K-T | B | 38.3/6.8 |
| C59 | 4030011600 | S.CER | C1608 JB 1E 104K-T | T | 20.3/5.3 |
| C60 | 4510007130 | S.ELE | EEFCD 0J 470R | T | 19.7/44.0 |
| C61 | 4550007480 | S.TAN | F930J106MAABMA | B | 44.9/29.7 |
| C62 | 4510007130 | S.ELE | EEFCD 0J 470R | T | 25.8/44.0 |

Eqv.= This component is equivalent to the REF No. component listed above, and may be substituted on parts orders and repairs.

M.=Mounted side (T: Mounted on the Top side, B: Mounted on the Bottom side)
S.=Surface mount

## [DSP-A UNIT]

| REF NO. | PARTS NO. | DESCRIPTION | M. | H/V LOCATION |
|---|---|---|---|---|
| C101 | 4030011600 | S.CER C1608 JB 1E 104K-T | B | 35.7/6.8 |
| C102 | 4550007480 | S.TAN F930J106MAABMA | B | 30.7/2.7 |
| C151 | 4030011600 | S.CER C1608 JB 1E 104K-T | B | 45.6/10.0 |
| C152 | 4030007030 | S.CER C1608 CH 1H 150J-T | B | 46.1/6.2 |
| C153 | 4030007030 | S.CER C1608 CH 1H 150J-T | B | 43.1/8.1 |
| C171 | 4030011600 | S.CER C1608 JB 1E 104K-T | T | 41.3/2.8 |
| C181 | 4030011600 | S.CER C1608 JB 1E 104K-T | T | 31.1/4.3 |
| C191 | 4030011600 | S.CER C1608 JB 1E 104K-T | T | 22.6/1.2 |
| C201 | 4030011600 | S.CER C1608 JB 1E 104K-T | B | 41.4/43.3 |
| C301 | 4340000250 | S.MYL ECHU 1C 104JX5 | T | 77.9/44.1 |
| C302 | 4550007500 | S.TAN F931D106MBABMA | B | 76.5/43.8 |
| Eqv. | 4550006470 | S.TAN TEESVB2 1D 106M8R | | |
| C303 | 4030011600 | S.CER C1608 JB 1E 104K-T | T | 75.7/40.9 |
| C304 | 4550007500 | S.TAN F931D106MBABMA | B | 71.7/43.8 |
| Eqv. | 4550006470 | S.TAN TEESVB2 1D 106M8R | | |
| C305 | 4030011600 | S.CER C1608 JB 1E 104K-T | T | 67.7/46.2 |
| C306 | 4030007050 | S.CER C1608 CH 1H 220J-T | T | 72.5/40.2 |
| C331 | 4030011600 | S.CER C1608 JB 1E 104K-T | T | 78.8/32.9 |
| C332 | 4550007520 | S.TAN F931A106MAABMA | B | 67.9/35.3 |
| C333 | 4030011600 | S.CER C1608 JB 1E 104K-T | T | 79.6/35.9 |
| C341 | 4550007500 | S.TAN F931D106MBABMA | B | 73.2/32.5 |
| Eqv. | 4550006470 | S.TAN TEESVB2 1D 106M8R | | |
| C342 | 4030011600 | S.CER C1608 JB 1E 104K-T | T | 73.7/31.7 |
| C343 | 4550007500 | S.TAN F931D106MBABMA | B | 73.3/38.2 |
| Eqv. | 4550006470 | S.TAN TEESVB2 1D 106M8R | | |
| C344 | 4030011600 | S.CER C1608 JB 1E 104K-T | T | 65.6/37.4 |
| C345 | 4340000250 | S.MYL ECHU 1C 104JX5 | T | 76.8/38.1 |
| C346 | 4030018580 | S.CER C1608 CH 1H 821J-T | T | 66.9/33.7 |
| C347 | 4030011600 | S.CER C1608 JB 1E 104K-T | T | 66.2/35.5 |
| C348 | 4030007050 | S.CER C1608 CH 1H 220J-T | T | 70.9/30.9 |
| C371 | 4550007500 | S.TAN F931D106MBABMA | B | 59.8/43.9 |
| Eqv. | 4550006470 | S.TAN TEESVB2 1D 106M8R | | |
| C372 | 4030011600 | S.CER C1608 JB 1E 104K-T | T | 63.4/42.6 |
| C373 | 4550007500 | S.TAN F931D106MBABMA | B | 50.2/43.9 |
| Eqv. | 4550006470 | S.TAN TEESVB2 1D 106M8R | | |
| C374 | 4030011600 | S.CER C1608 JB 1E 104K-T | T | 53.5/45.6 |
| C375 | 4340000250 | S.MYL ECHU 1C 104JX5 | T | 68.1/42.6 |
| C376 | 4030018580 | S.CER C1608 CH 1H 821J-T | T | 56.1/43.2 |
| C377 | 4030011600 | S.CER C1608 JB 1E 104K-T | T | 55.3/45.0 |
| C378 | 4030007050 | S.CER C1608 CH 1H 220J-T | T | 59.5/39.6 |
| C401 | 4550007520 | S.TAN F931A106MAABMA | B | 55.0/43.8 |
| C402 | 4030017840 | S.CER C2012 CH 1H 222J-T | T | 58.2/37.7 |
| C403 | 4550007480 | S.TAN F930J106MAABMA | B | 63.1/35.3 |
| C404 | 4030011810 | S.CER C1608 JB 1A 224K-T | T | 61.6/37.5 |
| C405 | 4550007480 | S.TAN F930J106MAABMA | B | 58.3/35.3 |
| C406 | 4030011810 | S.CER C1608 JB 1A 224K-T | T | 63.5/36.7 |
| C407 | 4550007480 | S.TAN F930J106MAABMA | B | 50.5/36.2 |
| C408 | 4030011600 | S.CER C1608 JB 1E 104K-T | T | 54.2/37.4 |
| C409 | 4030011600 | S.CER C1608 JB 1E 104K-T | T | 54.2/23.2 |
| C410 | 4030009000 | S.CER C2012 JB 1C 224K-T | T | 62.2/24.3 |
| C411 | 4550007480 | S.TAN F930J106MAABMA | B | 63.1/28.5 |
| C412 | 4550007480 | S.TAN F930J106MAABMA | B | 58.3/29.2 |
| C413 | 4030009000 | S.CER C2012 JB 1C 224K-T | T | 59.0/22.5 |
| C414 | 4030011600 | S.CER C1608 JB 1E 104K-T | T | 54.2/24.5 |
| C415 | 4550007520 | S.TAN F931A106MAABMA | B | 53.1/26.5 |
| C416 | 4550007520 | S.TAN F931A106MAABMA | B | 53.1/31.4 |
| C417 | 4030017840 | S.CER C2012 CH 1H 222J-T | T | 58.0/24.3 |
| C450 | 4030011600 | S.CER C1608 JB 1E 104K-T | T | 43.1/35.3 |
| C451 | 4030011600 | S.CER C1608 JB 1E 104K-T | T | 43.6/42.9 |
| C452 | 4030006860 | S.CER C1608 JB 1H 102K-T | T | 40.8/39.6 |
| C501 | 4030011600 | S.CER C1608 JB 1E 104K-T | T | 74.8/24.0 |
| C502 | 4550007500 | S.TAN F931D106MBABMA | B | 77.5/33.2 |
| Eqv. | 4550006470 | S.TAN TEESVB2 1D 106M8R | | |
| C503 | 4030011600 | S.CER C1608 JB 1E 104K-T | T | 71.7/23.5 |
| C504 | 4550007500 | S.TAN F931D106MBABMA | B | 67.9/29.2 |
| Eqv. | 4550006470 | S.TAN TEESVB2 1D 106M8R | | |
| C506 | 4030007090 | S.CER C1608 CH 1H 470J-T | T | 67.2/28.4 |
| C507 | 4030007090 | S.CER C1608 CH 1H 470J-T | T | 76.2/27.4 |
| C551 | 4550007520 | S.TAN F931A106MAABMA | B | 50.3/8.7 |
| C552 | 4030011600 | S.CER C1608 JB 1E 104K-T | T | 49.5/5.5 |
| C553 | 4550007520 | S.TAN F931A106MAABMA | B | 55.1/13.3 |
| C554 | 4030011600 | S.CER C1608 JB 1E 104K-T | T | 60.1/7.7 |
| C555 | 4030011600 | S.CER C1608 JB 1E 104K-T | T | 59.9/4.7 |
| C556 | 4550007480 | S.TAN F930J106MAABMA | B | 53.6/7.1 |
| C557 | 4030011600 | S.CER C1608 JB 1E 104K-T | T | 60.7/2.8 |
| C558 | 4550007520 | S.TAN F931A106MAABMA | B | 53.6/4.3 |
| C601 | 4550007480 | S.TAN F930J106MAABMA | B | 61.4/17.3 |
| C602 | 4030018510 | S.CER C2012 CH 1H 682J-T | T | 58.8/16.5 |
| C603 | 4550007500 | S.TAN F931D106MBABMA | B | 68.3/15.0 |
| Eqv. | 4550006470 | S.TAN TEESVB2 1D 106M8R | | |
| C604 | 4030011600 | S.CER C1608 JB 1E 104K-T | T | 58.2/14.3 |
| C605 | 4030011600 | S.CER C1608 JB 1E 104K-T | T | 64.6/14.0 |
| C606 | 4550007500 | S.TAN F931D106MBABMA | B | 69.3/19.2 |
| Eqv. | 4550006470 | S.TAN TEESVB2 1D 106M8R | | |
| C607 | 4030018510 | S.CER C2012 CH 1H 682J-T | T | 67.0/22.6 |
| C608 | 4030007050 | S.CER C1608 CH 1H 220J-T | T | 68.3/16.8 |
| C651 | 4550007480 | S.TAN F930J106MAABMA | B | 60.1/9.2 |
| C652 | 4030018510 | S.CER C2012 CH 1H 682J-T | T | 62.0/6.6 |
| C653 | 4550007500 | S.TAN F931D106MBABMA | B | 60.0/2.6 |
| Eqv. | 4550006470 | S.TAN TEESVB2 1D 106M8R | | |
| C654 | 4030011600 | S.CER C1608 JB 1E 104K-T | T | 64.1/2.6 |
| C655 | 4030011600 | S.CER C1608 JB 1E 104K-T | T | 67.8/2.6 |
| C656 | 4550007500 | S.TAN F931D106MBABMA | B | 60.0/6.0 |
| Eqv. | 4550006470 | S.TAN TEESVB2 1D 106M8R | | |
| C657 | 4030018510 | S.CER C2012 CH 1H 682J-T | T | 68.3/12.2 |
| C658 | 4030007050 | S.CER C1608 CH 1H 220J-T | T | 71.4/7.0 |
| C701 | 4030017840 | S.CER C2012 CH 1H 222J-T | T | 74.4/21.2 |
| C702 | 4030017840 | S.CER C2012 CH 1H 222J-T | T | 79.0/13.4 |
| C703 | 4550007500 | S.TAN F931D106MBABMA | B | 75.4/15.8 |
| Eqv. | 4550006470 | S.TAN TEESVB2 1D 106M8R | | |
| C704 | 4030011600 | S.CER C1608 JB 1E 104K-T | T | 76.0/12.9 |
| C705 | 4030011600 | S.CER C1608 JB 1E 104K-T | T | 79.5/20.7 |
| C706 | 4550007500 | S.TAN F931D106MBABMA | B | 75.7/21.1 |
| Eqv. | 4550006470 | S.TAN TEESVB2 1D 106M8R | | |
| C707 | 4030007050 | S.CER C1608 CH 1H 220J-T | T | 78.8/18.1 |

## [DSP-A UNIT]

| REF NO. | PARTS NO. | DESCRIPTION | M. | H/V LOCATION |
|---|---|---|---|---|
| C771 | 4550007480 | S.TAN F930J106MAABMA | B | 49.8/14.1 |
| C772 | 4030011600 | S.CER C1608 JB 1E 104K-T | T | 49.5/15.0 |
| C773 | 4550007480 | S.TAN F930J106MAABMA | B | 55.1/18.1 |
| C801 | 4030011600 | S.CER C1608 JB 1E 104K-T | T | 77.5/24.1 |
| C921 | 4550007510 | S.TAN F931C106MBABMA | B | 66.5/2.7 |
| C922 | 4030011600 | S.CER C1608 JB 1E 104K-T | T | 71.1/3.6 |
| C923 | 4550002830 | S.TAN TEESVD2 1V 685M12R | B | 78.3/6.5 |
| C924 | 4030011600 | S.CER C1608 JB 1E 104K-T | T | 80.1/8.7 |
| C925 | 4550007510 | S.TAN F931C106MBABMA | B | 67.2/10.6 |
| C926 | 4030011600 | S.CER C1608 JB 1E 104K-T | T | 71.9/12.8 |
| C927 | 4550002830 | S.TAN TEESVD2 1V 685M12R | B | 72.7/6.5 |
| C928 | 4030011600 | S.CER C1608 JB 1E 104K-T | T | 79.7/5.3 |
| C961 | 4030011600 | S.CER C1608 JB 1E 104K-T | B | 11.3/15.7 |
| C962 | 4550007520 | S.TAN F931A106MAABMA | B | 12.0/18.9 |
| C963 | 4030011600 | S.CER C1608 JB 1E 104K-T | B | 10.7/25.5 |
| C964 | 4550007520 | S.TAN F931A106MAABMA | B | 11.5/29.5 |
| J921 | 6910013900 | CON IMSA-9180S-22A | | |
| J961 | 6910012460 | CON IMSA-9180S-30A | | |

Eqv.= This component is equivalent to the REF No. component listed above, and may be substituted on parts orders and repairs.

M.=Mounted side (T: Mounted on the Top side, B: Mounted on the Bottom side)
S.=Surface mount

## [DSP-B UNIT]

| REF NO. | PARTS NO. | DESCRIPTION | | M. | H/V LOCATION |
|---|---|---|---|---|---|
| IC1 | 1140012211 | S.IC | TMS320C6713BZDP225 <FE> | T | 28.1/20.5 |
| IC151 | 1130008361 | S.IC | TC7SHU04FU(TE85LJF) | B | 45.6/8.1 |
| IC171 | 1130008041 | S.IC | TC7SH04FU(TE85LJF) | T | 41.4/4.7 |
| IC181 | 1130011151 | S.IC | SN74AHC2G08HDCT3 | T | 30.2/2.0 |
| IC191 | 1130011151 | S.IC | SN74AHC2G08HDCT3 | T | 24.0/3.6 |
| IC201 | 1130013493 | S.IC | AT29LV040A-15TU(SX-2590E-12) | B | 29.0/42.0 |
| IC203 | 1110006411 | S.IC | R3111N111A-TR-F | T | 30.1/36.5 |
| IC301 | 1110006100 | S.IC | NJM5534MD-TE1-#ZZZB | T | 72.4/44.8 |
| IC331 | 1130009981 | S.IC | TC7W53FK(TE85LF) | T | 76.9/34.1 |
| IC341 | 1110006100 | S.IC | NJM5534MD-TE1-#ZZZB | T | 70.3/35.6 |
| IC371 | 1110006100 | S.IC | NJM5534MD-TE1-#ZZZB | T | 59.5/44.4 |
| IC401 | 1110006111 | S.IC | AK5394AVSP/P | T | 54.3/31.0 |
| IC451 | 1130006891 | S.IC | TC7S04FU(TE85RF) | T | 43.5/41.0 |
| IC452 | 1130012160 | S.IC | SN74LVC1GU04DCKR | T | 42.8/38.5 |
| IC501 | 1110001901 | S.IC | UPC4570G2-E1-A | T | 71.7/27.5 |
| IC551 | 1130013090 | S.IC | AK4396VFP-E2/P | T | 54.7/7.4 |
| IC601 | 1110006100 | S.IC | NJM5534MD-TE1-#ZZZB | T | 63.7/17.4 |
| IC651 | 1110006100 | S.IC | NJM5534MD-TE1-#ZZZB | T | 66.8/7.3 |
| IC701 | 1110006100 | S.IC | NJM5534MD-TE1-#ZZZB | T | 74.2/17.5 |
| IC771 | 1110004770 | S.IC | BU9480F-E2 | T | 51.7/18.5 |
| Q1 | 1590000680 | S.TRA | DTC114EUA T106 | T | 45.8/16.6 |
| D501 | 1730002321 | S.ZEN | MAZ8051GML | B | 76.5/29.6 |
| FI101 | 2040000790 | S.LC | EXCCET103U | T | 36.5/2.9 |
| X151 | 6050011660 | S.XTA | CR-754 SMD-49 30.000 MHz <KDS> | B | 40.6/2.9 |
| L1 | 6200003950 | S.COI | HF50ACC 322513-T | B | 43.3/34.8 |
| L2 | 6180003501 | S.COI | SLF6028T-100M1R3-PF | B | 13.7/35.8 |
| L3 | 6200003640 | S.COI | MLF1608E 100K-T | B | 12.3/8.2 |
| L401 | 6200003950 | S.COI | HF50ACC 322513-T | T | 49.3/42.9 |
| L921 | 6200003950 | S.COI | HF50ACC 322513-T | T | 73.7/4.4 |
| L922 | 6200003950 | S.COI | HF50ACC 322513-T | T | 78.0/9.5 |
| L924 | 6200003950 | S.COI | HF50ACC 322513-T | T | 74.2/9.6 |
| L925 | 6200003950 | S.COI | HF50ACC 322513-T | T | 77.5/4.4 |
| L961 | 6200003950 | S.COI | HF50ACC 322513-T | B | 11.3/12.2 |
| L962 | 6200003950 | S.COI | HF50ACC 322513-T | B | 12.9/24.6 |
| R1 | 7030003560 | S.RES | ERJ3GEYJ 103 V (10K) | B | 42.6/22.4 |
| R2 | 7030003560 | S.RES | ERJ3GEYJ 103 V (10K) | B | 41.8/24.2 |
| R3 | 7030003560 | S.RES | ERJ3GEYJ 103 V (10K) | B | 42.6/21.1 |
| R4 | 7030003560 | S.RES | ERJ3GEYJ 103 V (10K) | B | 41.8/13.7 |
| R5 | 7030003440 | S.RES | ERJ3GEYJ 102 V (1K) | B | 23.2/6.0 |
| R6 | 7030003440 | S.RES | ERJ3GEYJ 102 V (1K) | B | 21.9/6.0 |
| R7 | 7030003640 | S.RES | ERJ3GEYJ 473 V (47K) | B | 20.1/6.8 |
| R8 | 7030003440 | S.RES | ERJ3GEYJ 102 V (1K) | B | 14.2/8.2 |
| R9 | 7030003640 | S.RES | ERJ3GEYJ 473 V (47K) | B | 14.5/11.7 |
| R10 | 7030003640 | S.RES | ERJ3GEYJ 473 V (47K) | T | 43.8/13.1 |
| R11 | 7030003460 | S.RES | ERJ3GEYJ 152 V (1.5K) | B | 48.2/9.7 |
| R12 | 7030003560 | S.RES | ERJ3GEYJ 103 V (10K) | B | 26.8/13.4 |
| R151 | 7030003320 | S.RES | ERJ3GEYJ 101 V (100) | T | 44.4/5.4 |
| R152 | 7030003800 | S.RES | ERJ3GEYJ 105 V (1M) | B | 43.5/6.2 |
| R171 | 7030003320 | S.RES | ERJ3GEYJ 101 V (100) | T | 41.3/1.4 |
| R181 | 7030003560 | S.RES | ERJ3GEYJ 103 V (10K) | T | 9.2/7.1 |
| R182 | 7030003560 | S.RES | ERJ3GEYJ 103 V (10K) | T | 6.4/7.1 |
| R183 | 7030003560 | S.RES | ERJ3GEYJ 103 V (10K) | T | 11.9/8.4 |
| R184 | 7030003560 | S.RES | ERJ3GEYJ 103 V (10K) | T | 11.9/7.1 |
| R201 | 7030003860 | S.RES | ERJ3GE JPW V | T | 30.9/39.2 |
| R301 | 7030003860 | S.RES | ERJ3GE JPW V | T | 79.6/38.5 |
| R302 | 7030009591 | S.RES | ERA3YED 472V (4.7K) | T | 77.6/46.9 |
| R303 | 7030009591 | S.RES | ERA3YED 472V (4.7K) | T | 75.8/46.2 |
| R304 | 7030003320 | S.RES | ERJ3GEYJ 101 V (100) | T | 78.2/40.8 |
| R305 | 7030003860 | S.RES | ERJ3GE JPW V | T | 75.8/43.6 |
| R306 | 7030003320 | S.RES | ERJ3GEYJ 101 V (100) | T | 69.0/46.2 |
| R331 | 7030003500 | S.RES | ERJ3GEYJ 332 V (3.3K) | T | 64.4/40.0 |
| R332 | 7030003480 | S.RES | ERJ3GEYJ 222 V (2.2K) | T | 65.7/40.0 |
| R333 | 7030003640 | S.RES | ERJ3GEYJ 473 V (47K) | T | 75.0/33.2 |
| R341 | 7030003320 | S.RES | ERJ3GEYJ 101 V (100) | T | 73.7/34.9 |
| R342 | 7030003320 | S.RES | ERJ3GEYJ 101 V (100) | T | 66.9/37.4 |
| R343 | 7030006601 | S.RES | ERA3YED 272V (2.7K) | T | 73.7/37.5 |
| R344 | 7030010390 | S.RES | ERA3YED 821V (820) | T | 65.6/33.7 |
| R345 | 7030009691 | S.RES | ERA3YED 101V (100) | T | 66.3/31.7 |
| R371 | 7030003320 | S.RES | ERJ3GEYJ 101 V (100) | T | 63.4/43.9 |
| R372 | 7030003320 | S.RES | ERJ3GEYJ 101 V (100) | T | 55.3/46.3 |
| R373 | 7030006601 | S.RES | ERA3YED 272V (2.7K) | T | 63.4/45.7 |
| R374 | 7030010390 | S.RES | ERA3YED 821V (820) | T | 54.7/41.9 |
| R375 | 7030009691 | S.RES | ERA3YED 101V (100) | T | 56.1/40.6 |
| R401 | 7030009591 | S.RES | ERA3YED 472V (4.7K) | T | 53.2/42.6 |
| R402 | 7030009591 | S.RES | ERA3YED 472V (4.7K) | T | 51.9/44.1 |
| R403 | 7030003640 | S.RES | ERJ3GEYJ 473 V (47K) | T | 54.2/38.7 |
| R404 | 7030003200 | S.RES | ERJ3GEYJ 100 V (10) | T | 50.1/40.0 |
| R405 | 7030003320 | S.RES | ERJ3GEYJ 101 V (100) | T | 51.1/38.2 |
| R406 | 7030003640 | S.RES | ERJ3GEYJ 473 V (47K) | T | 49.8/38.2 |
| R407 | 7030003460 | S.RES | ERJ3GEYJ 152 V (1.5K) | B | 46.9/36.1 |
| R409 | 7030003640 | S.RES | ERJ3GEYJ 473 V (47K) | T | 52.3/23.9 |
| R410 | 7030003640 | S.RES | ERJ3GEYJ 473 V (47K) | T | 47.3/23.9 |
| R411 | 7030003640 | S.RES | ERJ3GEYJ 473 V (47K) | T | 49.8/23.9 |
| R412 | 7030003520 | S.RES | ERJ3GEYJ 472 V (4.7K) | T | 56.1/22.3 |
| R413 | 7030003520 | S.RES | ERJ3GEYJ 472 V (4.7K) | T | 54.2/21.9 |
| R451 | 7030003800 | S.RES | ERJ3GEYJ 105 V (1M) | T | 42.6/36.6 |
| R501 | 7030006521 | S.RES | ERA3YED 561V (560) | T | 76.2/30.0 |
| R502 | 7030003360 | S.RES | ERJ3GEYJ 221 V (220) | T | 70.4/23.5 |
| R503 | 7030003380 | S.RES | ERJ3GEYJ 331 V (330) | T | 65.3/29.0 |
| R504 | 7030003680 | S.RES | ERJ3GEYJ 104 V (100K) | T | 65.3/27.7 |
| R551 | 7030003320 | S.RES | ERJ3GEYJ 101 V (100) | T | 49.5/8.7 |
| R559 | 7030003640 | S.RES | ERJ3GEYJ 473 V (47K) | T | 59.9/10.6 |

## [DSP-B UNIT]

| REF NO. | PARTS NO. | DESCRIPTION | | M. | H/V LOCATION |
|---|---|---|---|---|---|
| R601 | 7030006521 | S.RES | ERA3YED 561V (560) | T | 63.1/20.8 |
| R602 | 7030007661 | S.RES | ERA3YED 331V (330) | T | 64.1/22.1 |
| R603 | 7030007661 | S.RES | ERA3YED 331V (330) | T | 59.0/19.9 |
| R604 | 7030009961 | S.RES | ERA3YED 221V (220) | T | 68.8/21.0 |
| R605 | 7030007661 | S.RES | ERA3YED 331V (330) | T | 65.7/20.8 |
| R606 | 7030003320 | S.RES | ERJ3GEYJ 101 V (100) | T | 67.2/14.0 |
| R607 | 7030003320 | S.RES | ERJ3GEYJ 101 V (100) | T | 61.9/14.0 |
| R651 | 7030006521 | S.RES | ERA3YED 561V (560) | T | 64.4/10.7 |
| R652 | 7030007661 | S.RES | ERA3YED 331V (330) | T | 65.4/12.0 |
| R653 | 7030007661 | S.RES | ERA3YED 331V (330) | T | 62.2/10.2 |
| R654 | 7030009961 | S.RES | ERA3YED 221V (220) | T | 69.6/10.7 |
| R655 | 7030007661 | S.RES | ERA3YED 331V (330) | T | 67.0/10.7 |
| R658 | 7030003320 | S.RES | ERJ3GEYJ 101 V (100) | T | 67.8/3.9 |
| R659 | 7030003320 | S.RES | ERJ3GEYJ 101 V (100) | T | 64.1/3.9 |
| R701 | 7030010770 | S.RES | ERA3YED 681V (680) | T | 71.4/21.0 |
| R702 | 7030009861 | S.RES | ERA3YED 471V (470) | T | 74.8/22.7 |
| R703 | 7030010770 | S.RES | ERA3YED 681V (680) | T | 70.6/13.6 |
| R704 | 7030009861 | S.RES | ERA3YED 471V (470) | T | 77.3/13.4 |
| R705 | 7030009691 | S.RES | ERA3YED 101V (100) | T | 77.4/22.2 |
| R706 | 7030003320 | S.RES | ERJ3GEYJ 101 V (100) | T | 77.4/20.9 |
| R707 | 7030003320 | S.RES | ERJ3GEYJ 101 V (100) | T | 74.1/14.1 |
| R801 | 7030003650 | S.RES | ERJ3GEYJ 563 V (56K) | T | 78.0/27.2 |
| R802 | 7030003680 | S.RES | ERJ3GEYJ 104 V (100K) | T | 78.0/25.9 |
| R803 | 7030003480 | S.RES | ERJ3GEYJ 222 V (2.2K) | T | 78.8/24.1 |
| R804 | 7030003490 | S.RES | ERJ3GEYJ 272 V (2.7K) | T | 78.0/29.8 |
| R805 | 7030003340 | S.RES | ERJ3GEYJ 151 V (150) | T | 78.0/28.5 |
| R901 | 7030003860 | S.RES | ERJ3GE JPW V | T | 46.7/21.0 |
| R962 | 7030003320 | S.RES | ERJ3GEYJ 101 V (100) | T | 12.1/16.9 |
| R963 | 7030003320 | S.RES | ERJ3GEYJ 101 V (100) | T | 11.9/15.6 |
| R964 | 7030003320 | S.RES | ERJ3GEYJ 101 V (100) | T | 11.9/14.3 |
| R965 | 7030003320 | S.RES | ERJ3GEYJ 101 V (100) | T | 11.9/13.0 |
| R967 | 7030003320 | S.RES | ERJ3GEYJ 101 V (100) | T | 13.7/37.9 |
| R968 | 7030003320 | S.RES | ERJ3GEYJ 101 V (100) | T | 11.9/11.7 |
| R969 | 7030003320 | S.RES | ERJ3GEYJ 101 V (100) | T | 13.7/48.3 |
| R970 | 7030003320 | S.RES | ERJ3GEYJ 101 V (100) | T | 13.7/47.0 |
| R971 | 7030003320 | S.RES | ERJ3GEYJ 101 V (100) | T | 13.7/45.7 |
| R972 | 7030003320 | S.RES | ERJ3GEYJ 101 V (100) | T | 13.7/44.4 |
| R973 | 7030003320 | S.RES | ERJ3GEYJ 101 V (100) | T | 13.7/43.1 |
| R974 | 7030003320 | S.RES | ERJ3GEYJ 101 V (100) | T | 13.7/41.8 |
| R975 | 7030003320 | S.RES | ERJ3GEYJ 101 V (100) | T | 13.7/40.5 |
| R976 | 7030003320 | S.RES | ERJ3GEYJ 101 V (100) | T | 13.7/39.2 |
| C1 | 4030011600 | S.CER | C1608 JB 1E 104K-T | B | 15.3/30.6 |
| C2 | 4030011600 | S.CER | C1608 JB 1E 104K-T | B | 41.8/30.8 |
| C3 | 4030011600 | S.CER | C1608 JB 1E 104K-T | B | 18.1/32.9 |
| C4 | 4030011600 | S.CER | C1608 JB 1E 104K-T | B | 39.4/33.0 |
| C5 | 4030011600 | S.CER | C1608 JB 1E 104K-T | B | 23.1/26.4 |
| C6 | 4030011600 | S.CER | C1608 JB 1E 104K-T | B | 24.4/26.4 |
| C7 | 4030011600 | S.CER | C1608 JB 1E 104K-T | B | 28.7/26.4 |
| C8 | 4030011600 | S.CER | C1608 JB 1E 104K-T | B | 30.0/26.4 |
| C9 | 4030011600 | S.CER | C1608 JB 1E 104K-T | B | 33.9/26.4 |
| C10 | 4030011600 | S.CER | C1608 JB 1E 104K-T | B | 21.5/23.4 |
| C11 | 4030011600 | S.CER | C1608 JB 1E 104K-T | B | 36.0/23.8 |
| C12 | 4030011600 | S.CER | C1608 JB 1E 104K-T | T | 13.7/21.1 |
| C13 | 4030011600 | S.CER | C1608 JB 1E 104K-T | B | 22.3/20.2 |
| C14 | 4030011600 | S.CER | C1608 JB 1E 104K-T | B | 36.0/21.2 |
| C15 | 4030011600 | S.CER | C1608 JB 1E 104K-T | B | 22.3/18.9 |
| C16 | 4030011600 | S.CER | C1608 JB 1E 104K-T | B | 36.0/18.6 |
| C17 | 4030011600 | S.CER | C1608 JB 1E 104K-T | T | 43.6/20.1 |
| C18 | 4030011600 | S.CER | C1608 JB 1E 104K-T | B | 22.3/15.2 |
| C19 | 4030011600 | S.CER | C1608 JB 1E 104K-T | B | 34.7/14.5 |
| C20 | 4030011600 | S.CER | C1608 JB 1E 104K-T | B | 23.2/13.4 |
| C21 | 4030011600 | S.CER | C1608 JB 1E 104K-T | B | 24.5/13.4 |
| C22 | 4030011600 | S.CER | C1608 JB 1E 104K-T | B | 28.1/13.4 |
| C23 | 4030011600 | S.CER | C1608 JB 1E 104K-T | B | 32.6/12.6 |
| C24 | 4030011600 | S.CER | C1608 JB 1E 104K-T | B | 35.3/12.6 |
| C25 | 4030011600 | S.CER | C1608 JB 1E 104K-T | B | 17.3/6.8 |
| C26 | 4030011600 | S.CER | C1608 JB 1E 104K-T | B | 33.1/6.8 |
| C27 | 4030011600 | S.CER | C1608 JB 1E 104K-T | B | 41.8/11.1 |
| C28 | 4030011600 | S.CER | C1608 JB 1E 104K-T | B | 15.5/8.2 |
| C29 | 4030011600 | S.CER | C1608 JB 1E 104K-T | B | 40.9/6.8 |
| C30 | 4030011600 | S.CER | C1608 JB 1E 104K-T | T | 35.2/5.0 |
| C31 | 4030011600 | S.CER | C1608 JB 1E 104K-T | T | 28.5/5.3 |
| C32 | 4030011600 | S.CER | C1608 JB 1E 104K-T | T | 37.8/5.0 |
| C33 | 4030011600 | S.CER | C1608 JB 1E 104K-T | T | 18.5/35.2 |
| C34 | 4030011600 | S.CER | C1608 JB 1E 104K-T | T | 36.5/35.0 |
| C35 | 4030011600 | S.CER | C1608 JB 1E 104K-T | B | 26.1/32.9 |
| C36 | 4030011600 | S.CER | C1608 JB 1E 104K-T | B | 29.4/32.9 |
| C37 | 4030011600 | S.CER | C1608 JB 1E 104K-T | B | 36.8/33.0 |
| C38 | 4030011600 | S.CER | C1608 JB 1E 104K-T | B | 15.3/28.0 |
| C39 | 4030011600 | S.CER | C1608 JB 1E 104K-T | B | 22.4/32.9 |
| C40 | 4030011600 | S.CER | C1608 JB 1E 104K-T | B | 26.1/26.4 |
| C41 | 4030011600 | S.CER | C1608 JB 1E 104K-T | B | 21.8/26.4 |
| C42 | 4030011600 | S.CER | C1608 JB 1E 104K-T | B | 27.4/26.4 |
| C43 | 4030011600 | S.CER | C1608 JB 1E 104K-T | B | 32.6/26.4 |
| C44 | 4030011600 | S.CER | C1608 JB 1E 104K-T | B | 35.2/26.4 |
| C45 | 4030011600 | S.CER | C1608 JB 1E 104K-T | B | 41.8/26.8 |
| C46 | 4030011600 | S.CER | C1608 JB 1E 104K-T | B | 15.4/25.0 |
| C47 | 4030011600 | S.CER | C1608 JB 1E 104K-T | T | 43.6/29.1 |
| C48 | 4030011600 | S.CER | C1608 JB 1E 104K-T | B | 22.3/21.5 |
| C49 | 4030011600 | S.CER | C1608 JB 1E 104K-T | B | 41.8/18.0 |
| C50 | 4030011600 | S.CER | C1608 JB 1E 104K-T | B | 22.3/17.6 |
| C51 | 4030011600 | S.CER | C1608 JB 1E 104K-T | B | 36.0/16.0 |
| C52 | 4030011600 | S.CER | C1608 JB 1E 104K-T | B | 15.8/11.7 |
| C53 | 4030011600 | S.CER | C1608 JB 1E 104K-T | B | 21.9/13.4 |
| C54 | 4030011600 | S.CER | C1608 JB 1E 104K-T | T | 43.0/10.0 |
| C55 | 4030011600 | S.CER | C1608 JB 1E 104K-T | B | 29.4/13.4 |
| C56 | 4030011600 | S.CER | C1608 JB 1E 104K-T | B | 25.1/6.8 |
| C57 | 4030011600 | S.CER | C1608 JB 1E 104K-T | B | 29.8/6.8 |
| C58 | 4030011600 | S.CER | C1608 JB 1E 104K-T | B | 38.3/6.8 |
| C59 | 4030011600 | S.CER | C1608 JB 1E 104K-T | T | 20.3/5.3 |
| C60 | 4510007130 | S.ELE | EEFCD 0J 470R | T | 19.7/44.0 |
| C61 | 4550007480 | S.TAN | F930J106MAABMA | B | 44.9/29.7 |
| C62 | 4510007130 | S.ELE | EEFCD 0J 470R | T | 25.8/44.0 |

Eqv.= This component is equivalent to the REF No. component listed above, and may be substituted on parts orders and repairs.

M.=Mounted side (T: Mounted on the Top side, B: Mounted on the Bottom side)
S.=Surface mount

## [DSP-B UNIT]

| REF NO. | PARTS NO. | DESCRIPTION | | M. | H/V LOCATION |
|---|---|---|---|---|---|
| C101 | 4030011600 | S.CER | C1608 JB 1E 104K-T | B | 35.7/6.8 |
| C102 | 4550007480 | S.TAN | F930J106MAABMA | B | 30.7/2.7 |
| C151 | 4030011600 | S.CER | C1608 JB 1E 104K-T | B | 45.6/10.0 |
| C152 | 4030007030 | S.CER | C1608 CH 1H 150J-T | B | 46.1/6.2 |
| C153 | 4030007030 | S.CER | C1608 CH 1H 150J-T | B | 43.1/8.1 |
| C171 | 4030011600 | S.CER | C1608 JB 1E 104K-T | T | 41.3/2.8 |
| C181 | 4030011600 | S.CER | C1608 JB 1E 104K-T | T | 31.1/4.3 |
| C191 | 4030011600 | S.CER | C1608 JB 1E 104K-T | T | 22.6/1.2 |
| C201 | 4030011600 | S.CER | C1608 JB 1E 104K-T | B | 41.4/43.3 |
| C301 | 4340000250 | S.MYL | ECHU 1C 104JX5 | T | 77.9/44.1 |
| C302 | 4550007500 | S.TAN | F931D106MBABMA | B | 76.5/43.8 |
| Eqv. | 4550006470 | S.TAN | TEESVB2 1D 106M8R | | |
| C303 | 4030011600 | S.CER | C1608 JB 1E 104K-T | T | 75.7/40.9 |
| C304 | 4550007500 | S.TAN | F931D106MBABMA | B | 71.7/43.8 |
| Eqv. | 4550006470 | S.TAN | TEESVB2 1D 106M8R | | |
| C305 | 4030011600 | S.CER | C1608 JB 1E 104K-T | T | 67.7/46.2 |
| C306 | 4030007050 | S.CER | C1608 CH 1H 220J-T | T | 72.5/40.2 |
| C331 | 4030011600 | S.CER | C1608 JB 1E 104K-T | T | 78.8/32.9 |
| C332 | 4550007520 | S.TAN | F931A106MAABMA | B | 67.9/35.3 |
| C333 | 4030011600 | S.CER | C1608 JB 1E 104K-T | T | 79.6/35.9 |
| C341 | 4550007500 | S.TAN | F931D106MBABMA | B | 73.2/32.5 |
| Eqv. | 4550006470 | S.TAN | TEESVB2 1D 106M8R | | |
| C342 | 4030011600 | S.CER | C1608 JB 1E 104K-T | T | 73.7/31.7 |
| C343 | 4550007500 | S.TAN | F931D106MBABMA | B | 73.3/38.2 |
| Eqv. | 4550006470 | S.TAN | TEESVB2 1D 106M8R | | |
| C344 | 4030011600 | S.CER | C1608 JB 1E 104K-T | T | 65.6/37.4 |
| C345 | 4340000250 | S.MYL | ECHU 1C 104JX5 | T | 76.8/38.1 |
| C346 | 4030018580 | S.CER | C1608 CH 1H 821J-T | T | 66.9/33.7 |
| C347 | 4030011600 | S.CER | C1608 JB 1E 104K-T | T | 66.2/35.5 |
| C348 | 4030007050 | S.CER | C1608 CH 1H 220J-T | T | 70.9/30.9 |
| C371 | 4550007500 | S.TAN | F931D106MBABMA | B | 59.8/43.9 |
| Eqv. | 4550006470 | S.TAN | TEESVB2 1D 106M8R | | |
| C372 | 4030011600 | S.CER | C1608 JB 1E 104K-T | T | 63.4/42.6 |
| C373 | 4550007500 | S.TAN | F931D106MBABMA | B | 50.2/43.9 |
| Eqv. | 4550006470 | S.TAN | TEESVB2 1D 106M8R | | |
| C374 | 4030011600 | S.CER | C1608 JB 1E 104K-T | T | 53.5/45.6 |
| C375 | 4340000250 | S.MYL | ECHU 1C 104JX5 | T | 68.1/42.6 |
| C376 | 4030018580 | S.CER | C1608 CH 1H 821J-T | T | 56.1/43.2 |
| C377 | 4030011600 | S.CER | C1608 JB 1E 104K-T | T | 55.3/45.0 |
| C378 | 4030007050 | S.CER | C1608 CH 1H 220J-T | T | 59.5/39.6 |
| C401 | 4550007520 | S.TAN | F931A106MAABMA | B | 55.0/43.8 |
| C402 | 4030017840 | S.CER | C2012 CH 1H 222J-T | T | 58.2/37.7 |
| C403 | 4550007480 | S.TAN | F930J106MAABMA | B | 63.1/35.3 |
| C404 | 4030011810 | S.CER | C1608 JB 1A 224K-T | T | 61.6/37.5 |
| C405 | 4550007480 | S.TAN | F930J106MAABMA | B | 58.3/35.3 |
| C406 | 4030011810 | S.CER | C1608 JB 1A 224K-T | T | 63.5/36.7 |
| C407 | 4550007480 | S.TAN | F930J106MAABMA | B | 50.5/36.2 |
| C408 | 4030011600 | S.CER | C1608 JB 1E 104K-T | T | 54.2/37.4 |
| C409 | 4030011600 | S.CER | C1608 JB 1E 104K-T | T | 54.2/23.2 |
| C410 | 4030009000 | S.CER | C2012 JB 1C 224K-T | T | 62.2/24.3 |
| C411 | 4550007480 | S.TAN | F930J106MAABMA | B | 63.1/28.5 |
| C412 | 4550007480 | S.TAN | F930J106MAABMA | B | 58.3/29.2 |
| C413 | 4030009000 | S.CER | C2012 JB 1C 224K-T | T | 59.0/22.5 |
| C414 | 4030011600 | S.CER | C1608 JB 1E 104K-T | T | 54.2/24.5 |
| C415 | 4550007520 | S.TAN | F931A106MAABMA | B | 53.1/26.5 |
| C416 | 4550007520 | S.TAN | F931A106MAABMA | B | 53.1/31.4 |
| C417 | 4030017840 | S.CER | C2012 CH 1H 222J-T | T | 58.0/24.3 |
| C450 | 4030011600 | S.CER | C1608 JB 1E 104K-T | T | 43.1/35.3 |
| C451 | 4030011600 | S.CER | C1608 JB 1E 104K-T | T | 43.6/42.9 |
| C452 | 4030006860 | S.CER | C1608 JB 1H 102K-T | T | 40.8/39.6 |
| C501 | 4030011600 | S.CER | C1608 JB 1E 104K-T | T | 74.8/24.0 |
| C502 | 4550007500 | S.TAN | F931D106MBABMA | B | 77.5/33.2 |
| Eqv. | 4550006470 | S.TAN | TEESVB2 1D 106M8R | | |
| C503 | 4030011600 | S.CER | C1608 JB 1E 104K-T | T | 71.7/23.5 |
| C504 | 4550007500 | S.TAN | F931D106MBABMA | B | 67.9/29.2 |
| Eqv. | 4550006470 | S.TAN | TEESVB2 1D 106M8R | | |
| C506 | 4030007090 | S.CER | C1608 CH 1H 470J-T | T | 67.2/28.4 |
| C507 | 4030007090 | S.CER | C1608 CH 1H 470J-T | T | 76.2/27.4 |
| C551 | 4550007520 | S.TAN | F931A106MAABMA | B | 50.3/8.7 |
| C552 | 4030011600 | S.CER | C1608 JB 1E 104K-T | T | 49.5/5.5 |
| C553 | 4550007520 | S.TAN | F931A106MAABMA | B | 55.1/13.3 |
| C554 | 4030011600 | S.CER | C1608 JB 1E 104K-T | T | 60.1/7.7 |
| C555 | 4030011600 | S.CER | C1608 JB 1E 104K-T | T | 59.9/4.7 |
| C556 | 4550007480 | S.TAN | F930J106MAABMA | B | 53.6/7.1 |
| C557 | 4030011600 | S.CER | C1608 JB 1E 104K-T | T | 60.7/2.8 |
| C558 | 4550007520 | S.TAN | F931A106MAABMA | B | 53.6/4.3 |
| C601 | 4550007480 | S.TAN | F930J106MAABMA | B | 61.4/17.3 |
| C602 | 4030018510 | S.CER | C2012 CH 1H 682J-T | T | 58.8/16.5 |
| C603 | 4550007500 | S.TAN | F931D106MBABMA | B | 68.3/15.0 |
| Eqv. | 4550006470 | S.TAN | TEESVB2 1D 106M8R | | |
| C604 | 4030011600 | S.CER | C1608 JB 1E 104K-T | T | 58.2/14.3 |
| C605 | 4030011600 | S.CER | C1608 JB 1E 104K-T | T | 64.6/14.0 |
| C606 | 4550007500 | S.TAN | F931D106MBABMA | B | 69.3/19.2 |
| Eqv. | 4550006470 | S.TAN | TEESVB2 1D 106M8R | | |
| C607 | 4030018510 | S.CER | C2012 CH 1H 682J-T | T | 67.0/22.6 |
| C608 | 4030007050 | S.CER | C1608 CH 1H 220J-T | T | 68.3/16.8 |
| C651 | 4550007480 | S.TAN | F930J106MAABMA | B | 60.1/9.2 |
| C652 | 4030018510 | S.CER | C2012 CH 1H 682J-T | T | 62.0/6.6 |
| C653 | 4550007500 | S.TAN | F931D106MBABMA | B | 60.0/2.6 |
| Eqv. | 4550006470 | S.TAN | TEESVB2 1D 106M8R | | |
| C654 | 4030011600 | S.CER | C1608 JB 1E 104K-T | T | 64.1/2.6 |
| C655 | 4030011600 | S.CER | C1608 JB 1E 104K-T | T | 67.8/2.6 |
| C656 | 4550007500 | S.TAN | F931D106MBABMA | B | 60.0/6.0 |
| Eqv. | 4550006470 | S.TAN | TEESVB2 1D 106M8R | | |
| C657 | 4030018510 | S.CER | C2012 CH 1H 682J-T | T | 68.3/12.2 |
| C658 | 4030007050 | S.CER | C1608 CH 1H 220J-T | T | 71.4/7.0 |
| C701 | 4030017840 | S.CER | C2012 CH 1H 222J-T | T | 74.4/21.2 |
| C702 | 4030017840 | S.CER | C2012 CH 1H 222J-T | T | 79.0/13.4 |
| C703 | 4550007500 | S.TAN | F931D106MBABMA | B | 75.4/15.8 |
| Eqv. | 4550006470 | S.TAN | TEESVB2 1D 106M8R | | |
| C704 | 4030011600 | S.CER | C1608 JB 1E 104K-T | T | 76.0/12.9 |
| C705 | 4030011600 | S.CER | C1608 JB 1E 104K-T | T | 79.5/20.7 |
| C706 | 4550007500 | S.TAN | F931D106MBABMA | B | 75.7/21.1 |
| Eqv. | 4550006470 | S.TAN | TEESVB2 1D 106M8R | | |
| C707 | 4030007050 | S.CER | C1608 CH 1H 220J-T | T | 78.8/18.1 |

## [DSP-B UNIT]

| REF NO. | PARTS NO. | DESCRIPTION | | M. | H/V LOCATION |
|---|---|---|---|---|---|
| C771 | 4550007480 | S.TAN | F930J106MAABMA | B | 49.8/14.1 |
| C772 | 4030011600 | S.CER | C1608 JB 1E 104K-T | T | 49.5/15.0 |
| C773 | 4550007480 | S.TAN | F930J106MAABMA | B | 55.1/18.1 |
| C801 | 4030011600 | S.CER | C1608 JB 1E 104K-T | T | 77.5/24.1 |
| C921 | 4550007510 | S.TAN | F931C106MBABMA | B | 66.5/2.7 |
| C922 | 4030011600 | S.CER | C1608 JB 1E 104K-T | T | 71.1/3.6 |
| C923 | 4550002830 | S.TAN | TEESVD2 1V 685M12R | B | 78.3/6.5 |
| C924 | 4030011600 | S.CER | C1608 JB 1E 104K-T | T | 80.1/8.7 |
| C925 | 4550007510 | S.TAN | F931C106MBABMA | B | 67.2/10.6 |
| C926 | 4030011600 | S.CER | C1608 JB 1E 104K-T | T | 71.9/12.8 |
| C927 | 4550002830 | S.TAN | TEESVD2 1V 685M12R | B | 72.7/6.5 |
| C928 | 4030011600 | S.CER | C1608 JB 1E 104K-T | T | 79.7/5.3 |
| C961 | 4030011600 | S.CER | C1608 JB 1E 104K-T | B | 11.3/15.7 |
| C962 | 4550007520 | S.TAN | F931A106MAABMA | B | 12.0/18.9 |
| C963 | 4030011600 | S.CER | C1608 JB 1E 104K-T | B | 10.7/25.5 |
| C964 | 4550007520 | S.TAN | F931A106MAABMA | B | 11.5/29.5 |
| J921 | 6910013900 | CON | IMSA-9180S-22A | | |
| J961 | 6910012460 | CON | IMSA-9180S-30A | | |

Eqv.= This component is equivalent to the REF No. component listed above, and may be substituted on parts orders and repairs.

M.=Mounted side (T: Mounted on the Top side, B: Mounted on the Bottom side)
S.=Surface mount

## [DSP-TX UNIT]

| REF NO. | PARTS NO. | DESCRIPTION | | M. | H/V LOCATION |
|---|---|---|---|---|---|
| IC1 | 1140012211 | S.IC | TMS320C6713BZDP225 <FE> | T | 28.1/20.5 |
| IC151 | 1130008361 | S.IC | TC7SHU04FU(TE85LJF) | B | 45.6/8.1 |
| IC171 | 1130008041 | S.IC | TC7SH04FU(TE85LJF) | T | 41.4/4.7 |
| IC181 | 1130011151 | S.IC | SN74AHC2G08HDCT3 | T | 30.2/2.0 |
| IC191 | 1130011151 | S.IC | SN74AHC2G08HDCT3 | T | 24.0/3.6 |
| IC201 | 1130012205 | S.IC | AT29LV040A-15TU(SX-2590F-4) | B | 29.4/42.0 |
| IC203 | 1110006411 | S.IC | R3111N111A-TR-F | T | 30.3/36.6 |
| IC301 | 1110006100 | S.IC | NJM5534MD-TE1-#ZZZB | T | 72.4/44.5 |
| IC341 | 1110006100 | S.IC | NJM5534MD-TE1-#ZZZB | T | 72.1/35.3 |
| IC371 | 1110006100 | S.IC | NJM5534MD-TE1-#ZZZB | T | 59.5/44.5 |
| IC401 | 1110006111 | S.IC | AK5394AVSP/P | T | 54.3/31.0 |
| IC451 | 1130006891 | S.IC | TC7S04FU(TE85RF) | T | 42.8/35.9 |
| IC452 | 1130012160 | S.IC | SN74LVC1GU04DCKR | T | 42.3/39.8 |
| IC551 | 1190002090 | S.IC | AD1854JRSZRL <FE> | T | 53.4/5.8 |
| IC601 | 1110006100 | S.IC | NJM5534MD-TE1-#ZZZB | T | 53.1/15.2 |
| IC651 | 1110006100 | S.IC | NJM5534MD-TE1-#ZZZB | T | 65.3/5.1 |
| IC701 | 1110006100 | S.IC | NJM5534MD-TE1-#ZZZB | T | 63.2/14.8 |
| IC801 | 1110006100 | S.IC | NJM5534MD-TE1-#ZZZB | T | 68.5/25.9 |
| IC831 | 1110006100 | S.IC | NJM5534MD-TE1-#ZZZB | T | 73.1/15.9 |
| IC871 | 1110006100 | S.IC | NJM5534MD-TE1-#ZZZB | T | 77.0/26.2 |
| FI101 | 2040000790 | S.LC | EXCCET103U | T | 36.5/2.2 |
| X151 | 6050011660 | S.XTA | CR-754 SMD-49 30.000 MHz <KDS> | B | 40.6/2.9 |
| L1 | 6200003950 | S.COI | HF50ACC 322513-T | B | 45.1/39.6 |
| L2 | 6180003501 | S.COI | SLF6028T-100M1R3-PF | B | 13.6/35.4 |
| L3 | 6200003640 | S.COI | MLF1608E 100K-T | B | 11.0/7.7 |
| L401 | 6200003950 | S.COI | HF50ACC 322513-T | T | 49.5/43.1 |
| L921 | 6200003950 | S.COI | HF50ACC 322513-T | T | 75.0/3.8 |
| L922 | 6200003950 | S.COI | HF50ACC 322513-T | T | 79.7/8.9 |
| L924 | 6200003950 | S.COI | HF50ACC 322513-T | T | 75.0/8.9 |
| L925 | 6200003950 | S.COI | HF50ACC 322513-T | T | 79.7/3.8 |
| L961 | 6200003950 | S.COI | HF50ACC 322513-T | B | 11.5/12.0 |
| L962 | 6200003950 | S.COI | HF50ACC 322513-T | B | 12.6/24.0 |
| R1 | 7030003560 | S.RES | ERJ3GEYJ 103 V (10K) | B | 43.0/22.2 |
| R2 | 7030003560 | S.RES | ERJ3GEYJ 103 V (10K) | B | 42.2/24.2 |
| R3 | 7030003560 | S.RES | ERJ3GEYJ 103 V (10K) | B | 43.0/20.9 |
| R4 | 7030003560 | S.RES | ERJ3GEYJ 103 V (10K) | B | 42.5/13.7 |
| R5 | 7030003440 | S.RES | ERJ3GEYJ 102 V (1K) | B | 23.2/5.5 |
| R6 | 7030003440 | S.RES | ERJ3GEYJ 102 V (1K) | B | 21.9/5.5 |
| R7 | 7030003640 | S.RES | ERJ3GEYJ 473 V (47K) | B | 20.6/5.5 |
| R8 | 7030003440 | S.RES | ERJ3GEYJ 102 V (1K) | B | 13.8/8.2 |
| R9 | 7030003640 | S.RES | ERJ3GEYJ 473 V (47K) | B | 13.8/11.6 |
| R10 | 7030003640 | S.RES | ERJ3GEYJ 473 V (47K) | T | 43.8/13.1 |
| R11 | 7030003460 | S.RES | ERJ3GEYJ 152 V (1.5K) | B | 41.8/8.5 |
| R12 | 7030003560 | S.RES | ERJ3GEYJ 103 V (10K) | B | 26.9/13.9 |
| R151 | 7030003320 | S.RES | ERJ3GEYJ 101 V (100) | T | 44.7/5.4 |
| R152 | 7030003800 | S.RES | ERJ3GEYJ 105 V (1M) | B | 43.5/6.2 |
| R171 | 7030003320 | S.RES | ERJ3GEYJ 101 V (100) | T | 41.3/1.4 |
| R181 | 7030003560 | S.RES | ERJ3GEYJ 103 V (10K) | T | 6.5/7.1 |
| R182 | 7030003560 | S.RES | ERJ3GEYJ 103 V (10K) | T | 9.2/7.1 |
| R183 | 7030003560 | S.RES | ERJ3GEYJ 103 V (10K) | T | 11.9/8.4 |
| R184 | 7030003560 | S.RES | ERJ3GEYJ 103 V (10K) | T | 11.9/7.1 |
| R201 | 7030003860 | S.RES | ERJ3GE JPW V | T | 30.9/39.3 |
| R301 | 7030003440 | S.RES | ERJ3GEYJ 102 V (1K) | T | 79.5/37.8 |
| R302 | 7030009591 | S.RES | ERA3YED 472V (4.7K) | T | 77.6/46.9 |
| R303 | 7030009591 | S.RES | ERA3YED 472V (4.7K) | T | 75.8/46.2 |
| R304 | 7030003320 | S.RES | ERJ3GEYJ 101 V (100) | T | 78.1/40.2 |
| R305 | 7030003440 | S.RES | ERJ3GEYJ 102 V (1K) | T | 75.8/43.6 |
| R306 | 7030003320 | S.RES | ERJ3GEYJ 101 V (100) | T | 69.0/46.2 |
| R341 | 7030003320 | S.RES | ERJ3GEYJ 101 V (100) | T | 76.3/34.7 |
| R342 | 7030003320 | S.RES | ERJ3GEYJ 101 V (100) | T | 68.5/38.4 |
| R343 | 7030005321 | S.RES | ERA3YED 103V (10K) | T | 64.5/34.7 |
| R344 | 7030009591 | S.RES | ERA3YED 472V (4.7K) | T | 67.0/33.9 |
| R345 | 7030009691 | S.RES | ERA3YED 101V (100) | T | 67.8/32.0 |
| R371 | 7030003320 | S.RES | ERJ3GEYJ 101 V (100) | B | 62.9/42.2 |
| R372 | 7030003320 | S.RES | ERJ3GEYJ 101 V (100) | T | 55.3/46.3 |
| R373 | 7030005321 | S.RES | ERA3YED 103V (10K) | T | 63.7/46.2 |
| R374 | 7030009591 | S.RES | ERA3YED 472V (4.7K) | T | 54.7/41.9 |
| R375 | 7030009691 | S.RES | ERA3YED 101V (100) | T | 56.1/40.6 |
| R401 | 7030009591 | S.RES | ERA3YED 472V (4.7K) | T | 53.2/42.6 |
| R402 | 7030009591 | S.RES | ERA3YED 472V (4.7K) | T | 51.7/44.1 |
| R403 | 7030003640 | S.RES | ERJ3GEYJ 473 V (47K) | T | 54.2/38.7 |
| R404 | 7030003200 | S.RES | ERJ3GEYJ 100 V (10) | T | 50.1/40.0 |
| R405 | 7030003320 | S.RES | ERJ3GEYJ 101 V (100) | T | 51.1/38.2 |
| R406 | 7030003640 | S.RES | ERJ3GEYJ 473 V (47K) | T | 49.8/38.2 |
| R407 | 7030003460 | S.RES | ERJ3GEYJ 152 V (1.5K) | B | 48.1/35.5 |
| R409 | 7030003640 | S.RES | ERJ3GEYJ 473 V (47K) | T | 52.0/23.9 |
| R410 | 7030003640 | S.RES | ERJ3GEYJ 473 V (47K) | T | 50.7/23.9 |
| R411 | 7030003640 | S.RES | ERJ3GEYJ 473 V (47K) | T | 49.1/23.9 |
| R412 | 7030003520 | S.RES | ERJ3GEYJ 472 V (4.7K) | T | 57.3/22.3 |
| R413 | 7030003520 | S.RES | ERJ3GEYJ 472 V (4.7K) | T | 57.3/21.0 |
| R414 | 7030003360 | S.RES | ERJ3GEYJ 221 V (220) | T | 46.1/38.2 |
| R451 | 7030003800 | S.RES | ERJ3GEYJ 105 V (1M) | T | 40.4/41.1 |
| R452 | 7030003440 | S.RES | ERJ3GEYJ 102 V (1K) | B | 45.9/35.5 |
| R551 | 7030003360 | S.RES | ERJ3GEYJ 221 V (220) | B | 54.0/9.3 |
| R601 | 7030006521 | S.RES | ERA3YED 561V (560) | T | 50.3/18.6 |
| R602 | 7030007661 | S.RES | ERA3YED 331V (330) | T | 50.3/19.9 |
| R603 | 7030007661 | S.RES | ERA3YED 331V (330) | T | 48.3/17.2 |
| R604 | 7030009961 | S.RES | ERA3YED 221V (220) | T | 55.5/18.6 |
| R605 | 7030007661 | S.RES | ERA3YED 331V (330) | T | 52.9/18.6 |
| R606 | 7030003320 | S.RES | ERJ3GEYJ 101 V (100) | B | 51.5/24.7 |
| R607 | 7030003320 | S.RES | ERJ3GEYJ 101 V (100) | B | 52.2/13.2 |
| R651 | 7030006521 | S.RES | ERA3YED 561V (560) | T | 62.6/8.5 |
| R652 | 7030007661 | S.RES | ERA3YED 331V (330) | T | 63.5/9.8 |
| R653 | 7030007661 | S.RES | ERA3YED 331V (330) | T | 60.4/8.3 |
| R654 | 7030009961 | S.RES | ERA3YED 221V (220) | T | 67.8/8.5 |
| R655 | 7030007661 | S.RES | ERA3YED 331V (330) | T | 65.2/8.5 |

## [DSP-TX UNIT]

| REF NO. | PARTS NO. | DESCRIPTION | | M. | H/V LOCATION |
|---|---|---|---|---|---|
| R656 | 7030003320 | S.RES | ERJ3GEYJ 101 V (100) | B | 67.3/8.3 |
| R657 | 7030003320 | S.RES | ERJ3GEYJ 101 V (100) | B | 65.1/2.8 |
| R701 | 7030010770 | S.RES | ERA3YED 681V (680) | T | 58.1/18.2 |
| R702 | 7030009861 | S.RES | ERA3YED 471V (470) | T | 62.1/20.1 |
| R703 | 7030010770 | S.RES | ERA3YED 681V (680) | T | 70.8/9.4 |
| R704 | 7030009861 | S.RES | ERA3YED 471V (470) | T | 55.7/11.8 |
| R705 | 7030009691 | S.RES | ERA3YED 101V (100) | T | 69.1/12.1 |
| R706 | 7030003320 | S.RES | ERJ3GEYJ 101 V (100) | B | 61.1/23.1 |
| R707 | 7030003320 | S.RES | ERJ3GEYJ 101 V (100) | B | 54.8/14.6 |
| R801 | 7030009591 | S.RES | ERA3YED 472V (4.7K) | T | 65.0/22.8 |
| R802 | 7030003320 | S.RES | ERJ3GEYJ 101 V (100) | T | 63.5/22.8 |
| R803 | 7030005321 | S.RES | ERA3YED 103V (10K) | T | 68.7/21.1 |
| R804 | 7030003320 | S.RES | ERJ3GEYJ 101 V (100) | B | 69.8/31.7 |
| R805 | 7030003320 | S.RES | ERJ3GEYJ 101 V (100) | B | 72.4/21.7 |
| R831 | 7030009591 | S.RES | ERA3YED 472V (4.7K) | T | 68.4/17.9 |
| R832 | 7030003320 | S.RES | ERJ3GEYJ 101 V (100) | T | 68.7/19.8 |
| R833 | 7030005321 | S.RES | ERA3YED 103V (10K) | T | 69.7/15.3 |
| R834 | 7030003320 | S.RES | ERJ3GEYJ 101 V (100) | B | 64.0/23.3 |
| R835 | 7030003320 | S.RES | ERJ3GEYJ 101 V (100) | B | 73.5/13.4 |
| R871 | 7030003520 | S.RES | ERJ3GEYJ 472 V (4.7K) | T | 77.8/13.8 |
| R872 | 7030003520 | S.RES | ERJ3GEYJ 472 V (4.7K) | T | 79.1/18.8 |
| R874 | 7030003320 | S.RES | ERJ3GEYJ 101 V (100) | B | 71.4/31.7 |
| R875 | 7030003320 | S.RES | ERJ3GEYJ 101 V (100) | B | 74.4/21.3 |
| R901 | 7030003860 | S.RES | ERJ3GE JPW V | T | 52.7/22.0 |
| R903 | 7030003860 | S.RES | ERJ3GE JPW V | B | 47.8/38.0 |
| R904 | 7030003860 | S.RES | ERJ3GE JPW V | T | 47.1/4.2 |
| R905 | 7030003860 | S.RES | ERJ3GE JPW V | B | 48.1/10.2 |
| R962 | 7030003320 | S.RES | ERJ3GEYJ 101 V (100) | T | 12.1/17.6 |
| R963 | 7030003320 | S.RES | ERJ3GEYJ 101 V (100) | T | 11.9/16.3 |
| R964 | 7030003320 | S.RES | ERJ3GEYJ 101 V (100) | T | 11.9/15.0 |
| R967 | 7030003320 | S.RES | ERJ3GEYJ 101 V (100) | T | 13.7/38.8 |
| R968 | 7030003320 | S.RES | ERJ3GEYJ 101 V (100) | T | 11.9/12.4 |
| R969 | 7030003320 | S.RES | ERJ3GEYJ 101 V (100) | T | 13.7/47.9 |
| R970 | 7030003320 | S.RES | ERJ3GEYJ 101 V (100) | T | 13.7/46.6 |
| R971 | 7030003320 | S.RES | ERJ3GEYJ 101 V (100) | T | 13.7/45.3 |
| R972 | 7030003320 | S.RES | ERJ3GEYJ 101 V (100) | T | 13.7/44.0 |
| R973 | 7030003320 | S.RES | ERJ3GEYJ 101 V (100) | T | 13.7/42.7 |
| R974 | 7030003320 | S.RES | ERJ3GEYJ 101 V (100) | T | 13.7/41.4 |
| R975 | 7030003320 | S.RES | ERJ3GEYJ 101 V (100) | T | 13.7/40.1 |
| R976 | 7030003320 | S.RES | ERJ3GEYJ 101 V (100) | T | 11.9/13.7 |
| C1 | 4030011600 | S.CER | C1608 JB 1E 104K-T | B | 15.3/30.5 |
| C2 | 4030011600 | S.CER | C1608 JB 1E 104K-T | B | 42.2/30.8 |
| C3 | 4030011600 | S.CER | C1608 JB 1E 104K-T | B | 18.1/32.9 |
| C4 | 4030011600 | S.CER | C1608 JB 1E 104K-T | B | 39.4/33.0 |
| C5 | 4030011600 | S.CER | C1608 JB 1E 104K-T | B | 23.3/25.9 |
| C6 | 4030011600 | S.CER | C1608 JB 1E 104K-T | B | 24.6/25.9 |
| C7 | 4030011600 | S.CER | C1608 JB 1E 104K-T | B | 28.7/25.9 |
| C8 | 4030011600 | S.CER | C1608 JB 1E 104K-T | B | 30.0/25.9 |
| C9 | 4030011600 | S.CER | C1608 JB 1E 104K-T | B | 33.9/25.9 |
| C10 | 4030011600 | S.CER | C1608 JB 1E 104K-T | B | 22.8/23.8 |
| C11 | 4030011600 | S.CER | C1608 JB 1E 104K-T | B | 35.5/23.3 |
| C12 | 4030011600 | S.CER | C1608 JB 1E 104K-T | T | 12.6/20.8 |
| C13 | 4030011600 | S.CER | C1608 JB 1E 104K-T | B | 22.8/20.2 |
| C14 | 4030011600 | S.CER | C1608 JB 1E 104K-T | B | 35.5/20.7 |
| C15 | 4030011600 | S.CER | C1608 JB 1E 104K-T | B | 22.8/18.9 |
| C16 | 4030011600 | S.CER | C1608 JB 1E 104K-T | B | 34.2/18.5 |
| C17 | 4030011600 | S.CER | C1608 JB 1E 104K-T | T | 43.6/20.1 |
| C18 | 4030011600 | S.CER | C1608 JB 1E 104K-T | B | 22.8/15.7 |
| C19 | 4030011600 | S.CER | C1608 JB 1E 104K-T | B | 34.2/15.0 |
| C20 | 4030011600 | S.CER | C1608 JB 1E 104K-T | B | 23.3/13.9 |
| C21 | 4030011600 | S.CER | C1608 JB 1E 104K-T | B | 24.6/13.9 |
| C22 | 4030011600 | S.CER | C1608 JB 1E 104K-T | B | 28.2/13.9 |
| C23 | 4030011600 | S.CER | C1608 JB 1E 104K-T | B | 32.6/13.1 |
| C24 | 4030011600 | S.CER | C1608 JB 1E 104K-T | B | 35.2/13.1 |
| C25 | 4030011600 | S.CER | C1608 JB 1E 104K-T | B | 17.3/6.8 |
| C26 | 4030011600 | S.CER | C1608 JB 1E 104K-T | B | 33.1/6.3 |
| C27 | 4030011600 | S.CER | C1608 JB 1E 104K-T | B | 42.5/11.1 |
| C28 | 4030011600 | S.CER | C1608 JB 1E 104K-T | B | 15.1/8.2 |
| C29 | 4030011600 | S.CER | C1608 JB 1E 104K-T | B | 40.9/6.6 |
| C30 | 4030011600 | S.CER | C1608 JB 1E 104K-T | T | 35.2/5.0 |
| C31 | 4030011600 | S.CER | C1608 JB 1E 104K-T | T | 28.5/5.3 |
| C32 | 4030011600 | S.CER | C1608 JB 1E 104K-T | T | 37.8/5.0 |
| C33 | 4030011600 | S.CER | C1608 JB 1E 104K-T | T | 18.6/35.6 |
| C34 | 4030011600 | S.CER | C1608 JB 1E 104K-T | T | 37.6/35.6 |
| C35 | 4030011600 | S.CER | C1608 JB 1E 104K-T | B | 26.1/32.9 |
| C36 | 4030011600 | S.CER | C1608 JB 1E 104K-T | B | 29.4/32.9 |
| C37 | 4030011600 | S.CER | C1608 JB 1E 104K-T | B | 36.8/33.0 |
| C38 | 4030011600 | S.CER | C1608 JB 1E 104K-T | B | 15.3/27.8 |
| C39 | 4030011600 | S.CER | C1608 JB 1E 104K-T | B | 22.4/32.9 |
| C40 | 4030011600 | S.CER | C1608 JB 1E 104K-T | B | 26.1/25.9 |
| C41 | 4030011600 | S.CER | C1608 JB 1E 104K-T | B | 22.0/25.9 |
| C42 | 4030011600 | S.CER | C1608 JB 1E 104K-T | B | 27.4/25.9 |
| C43 | 4030011600 | S.CER | C1608 JB 1E 104K-T | B | 32.6/25.9 |
| C44 | 4030011600 | S.CER | C1608 JB 1E 104K-T | B | 35.2/25.9 |
| C45 | 4030011600 | S.CER | C1608 JB 1E 104K-T | B | 42.2/26.8 |
| C46 | 4030011600 | S.CER | C1608 JB 1E 104K-T | B | 15.4/25.0 |
| C47 | 4030011600 | S.CER | C1608 JB 1E 104K-T | T | 43.6/29.1 |
| C48 | 4030011600 | S.CER | C1608 JB 1E 104K-T | B | 22.8/21.5 |
| C49 | 4030011600 | S.CER | C1608 JB 1E 104K-T | B | 42.5/18.0 |
| C50 | 4030011600 | S.CER | C1608 JB 1E 104K-T | B | 22.8/17.6 |
| C51 | 4030011600 | S.CER | C1608 JB 1E 104K-T | B | 35.5/17.6 |
| C52 | 4030011600 | S.CER | C1608 JB 1E 104K-T | B | 15.1/11.6 |
| C53 | 4030011600 | S.CER | C1608 JB 1E 104K-T | B | 22.0/13.9 |
| C54 | 4030011600 | S.CER | C1608 JB 1E 104K-T | T | 43.3/10.0 |
| C55 | 4030011600 | S.CER | C1608 JB 1E 104K-T | B | 29.5/13.9 |
| C56 | 4030011600 | S.CER | C1608 JB 1E 104K-T | B | 25.2/6.6 |
| C57 | 4030011600 | S.CER | C1608 JB 1E 104K-T | B | 29.8/6.3 |
| C58 | 4030011600 | S.CER | C1608 JB 1E 104K-T | B | 38.3/6.6 |
| C59 | 4030011600 | S.CER | C1608 JB 1E 104K-T | T | 20.3/5.3 |
| C60 | 4510007130 | S.ELE | EEFCD 0J 470R | T | 25.4/41.7 |
| C61 | 4550007480 | S.TAN | F930J106MAABMA | B | 45.3/29.7 |
| C62 | 4510007130 | S.ELE | EEFCD 0J 470R | T | 19.5/41.7 |
| C101 | 4030011600 | S.CER | C1608 JB 1E 104K-T | B | 35.7/6.6 |

Eqv.= This component is equivalent to the REF No. component listed above, and may be substituted on parts orders and repairs.

M.=Mounted side (T: Mounted on the Top side, B: Mounted on the Bottom side)
S.=Surface mount

## [DSP-TX UNIT]

| REF NO. | PARTS NO. | DESCRIPTION | M. | H/V LOCATION |
|---|---|---|---|---|
| C102 | 4550007480 | S.TAN F930J106MAABMA | B | 30.7/2.7 |
| C151 | 4030011600 | S.CER C1608 JB 1E 104K-T | B | 45.5/10.2 |
| C152 | 4030007030 | S.CER C1608 CH 1H 150J-T | B | 46.1/6.2 |
| C153 | 4030007030 | S.CER C1608 CH 1H 150J-T | B | 43.1/8.1 |
| C171 | 4030011600 | S.CER C1608 JB 1E 104K-T | T | 41.3/2.8 |
| C181 | 4030011600 | S.CER C1608 JB 1E 104K-T | T | 31.1/4.3 |
| C191 | 4030011600 | S.CER C1608 JB 1E 104K-T | T | 22.6/1.2 |
| C201 | 4030011600 | S.CER C1608 JB 1E 104K-T | B | 42.3/44.4 |
| C301 | 4550007660 | S.TAN F931E105MAABMA | B | 80.4/44.2 |
| Eqv. | 4550003220 | S.TAN TEESVA 1E 105M8R | | |
| C302 | 4550007500 | S.TAN F931D106MBABMA | B | 75.6/44.2 |
| Eqv. | 4550006470 | S.TAN TEESVB2 1D 106M8R | | |
| C303 | 4030011600 | S.CER C1608 JB 1E 104K-T | T | 75.8/40.7 |
| C304 | 4550007500 | S.TAN F931D106MBABMA | B | 71.5/44.2 |
| Eqv. | 4550006470 | S.TAN TEESVB2 1D 106M8R | | |
| C305 | 4030011600 | S.CER C1608 JB 1E 104K-T | T | 67.7/46.2 |
| C306 | 4030007050 | S.CER C1608 CH 1H 220J-T | T | 72.3/39.9 |
| C341 | 4550007500 | S.TAN F931D106MBABMA | B | 74.1/34.7 |
| Eqv. | 4550006470 | S.TAN TEESVB2 1D 106M8R | | |
| C342 | 4030011600 | S.CER C1608 JB 1E 104K-T | T | 75.5/32.8 |
| C343 | 4550007500 | S.TAN F931D106MBABMA | B | 66.9/36.9 |
| Eqv. | 4550006470 | S.TAN TEESVB2 1D 106M8R | | |
| C344 | 4030011600 | S.CER C1608 JB 1E 104K-T | T | 67.2/38.4 |
| C345 | 4550007660 | S.TAN F931E105MAABMA | B | 76.8/38.7 |
| Eqv. | 4550003220 | S.TAN TEESVA 1E 105M8R | | |
| C346 | 4030007140 | S.CER C1608 CH 1H 121J-T | T | 68.5/33.9 |
| C347 | 4030011600 | S.CER C1608 JB 1E 104K-T | T | 67.8/35.9 |
| C348 | 4030007050 | S.CER C1608 CH 1H 220J-T | T | 72.1/30.7 |
| C371 | 4550007500 | S.TAN F931D106MBABMA | B | 59.8/43.9 |
| Eqv. | 4550006470 | S.TAN TEESVB2 1D 106M8R | | |
| C372 | 4030011600 | S.CER C1608 JB 1E 104K-T | T | 63.7/43.0 |
| C373 | 4550007500 | S.TAN F931D106MBABMA | B | 50.2/43.9 |
| Eqv. | 4550006470 | S.TAN TEESVB2 1D 106M8R | | |
| C374 | 4030011600 | S.CER C1608 JB 1E 104K-T | T | 53.5/45.6 |
| C375 | 4550007660 | S.TAN F931E105MAABMA | B | 66.0/43.8 |
| Eqv. | 4550003220 | S.TAN TEESVA 1E 105M8R | | |
| C376 | 4030007140 | S.CER C1608 CH 1H 121J-T | T | 56.1/43.2 |
| C377 | 4030011600 | S.CER C1608 JB 1E 104K-T | T | 55.3/45.0 |
| C378 | 4030007050 | S.CER C1608 CH 1H 220J-T | T | 59.5/39.9 |
| C401 | 4550007480 | S.TAN F930J106MAABMA | B | 55.0/43.8 |
| C402 | 4030017840 | S.CER C2012 CH 1H 222J-T | T | 58.2/37.7 |
| C403 | 4550007480 | S.TAN F930J106MAABMA | B | 63.1/35.3 |
| C404 | 4030011810 | S.CER C1608 JB 1A 224K-T | T | 61.6/37.5 |
| C405 | 4550007480 | S.TAN F930J106MAABMA | B | 58.3/36.0 |
| C406 | 4030011810 | S.CER C1608 JB 1A 224K-T | T | 64.5/32.1 |
| C407 | 4550007480 | S.TAN F930J106MAABMA | B | 51.2/36.2 |
| C408 | 4030011600 | S.CER C1608 JB 1E 104K-T | T | 54.2/37.4 |
| C410 | 4030009000 | S.CER C2012 JB 1C 224K-T | T | 61.0/24.1 |
| C411 | 4550007480 | S.TAN F930J106MAABMA | B | 62.6/28.3 |
| C412 | 4550007480 | S.TAN F930J106MAABMA | B | 58.3/29.9 |
| C413 | 4030009000 | S.CER C2012 JB 1C 224K-T | T | 64.8/28.7 |
| C414 | 4030011600 | S.CER C1608 JB 1E 104K-T | T | 54.3/24.5 |
| C415 | 4550007520 | S.TAN F931A106MAABMA | B | 52.7/29.3 |
| C416 | 4550007480 | S.TAN F930J106MAABMA | B | 56.2/24.5 |
| C417 | 4030017840 | S.CER C2012 CH 1H 222J-T | T | 57.5/24.1 |
| C450 | 4030011600 | S.CER C1608 JB 1E 104K-T | T | 44.2/39.7 |
| C451 | 4030011600 | S.CER C1608 JB 1E 104K-T | T | 42.9/37.8 |
| C452 | 4030006860 | S.CER C1608 JB 1H 102K-T | T | 42.9/41.9 |
| C453 | 4030007050 | S.CER C1608 CH 1H 220J-T | B | 45.9/36.8 |
| C551 | 4030011600 | S.CER C1608 JB 1E 104K-T | T | 48.0/1.7 |
| C552 | 4550007520 | S.TAN F931A106MAABMA | B | 49.8/3.3 |
| C553 | 4550007520 | S.TAN F931A106MAABMA | B | 57.2/8.9 |
| C554 | 4550007520 | S.TAN F931A106MAABMA | B | 55.0/3.3 |
| C555 | 4030011600 | S.CER C1608 JB 1E 104K-T | T | 58.6/2.5 |
| C556 | 4030011600 | S.CER C1608 JB 1E 104K-T | T | 58.6/5.8 |
| C557 | 4030011600 | S.CER C1608 JB 1E 104K-T | B | 57.7/4.2 |
| C601 | 4550007660 | S.TAN F931E105MAABMA | B | 50.5/9.4 |
| Eqv. | 4550003220 | S.TAN TEESVA 1E 105M8R | | |
| C602 | 4030018510 | S.CER C2012 CH 1H 682J-T | T | 48.3/14.2 |
| C603 | 4550007500 | S.TAN F931D106MBABMA | B | 50.4/15.9 |
| Eqv. | 4550006470 | S.TAN TEESVB2 1D 106M8R | | |
| C604 | 4030011600 | S.CER C1608 JB 1E 104K-T | T | 49.7/11.8 |
| C605 | 4030011600 | S.CER C1608 JB 1E 104K-T | T | 52.8/11.8 |
| C606 | 4550007500 | S.TAN F931D106MBABMA | B | 51.1/20.9 |
| Eqv. | 4550006470 | S.TAN TEESVB2 1D 106M8R | | |
| C607 | 4030018510 | S.CER C2012 CH 1H 682J-T | T | 53.3/20.2 |
| C608 | 4030007050 | S.CER C1608 CH 1H 220J-T | T | 57.7/14.6 |
| C651 | 4550007660 | S.TAN F931E105MAABMA | B | 60.1/9.0 |
| Eqv. | 4550003220 | S.TAN TEESVA 1E 105M8R | | |
| C652 | 4030018510 | S.CER C2012 CH 1H 682J-T | T | 60.2/5.3 |
| C653 | 4550007500 | S.TAN F931D106MBABMA | B | 62.6/3.3 |
| Eqv. | 4550006470 | S.TAN TEESVB2 1D 106M8R | | |
| C654 | 4030011600 | S.CER C1608 JB 1E 104K-T | T | 62.5/1.7 |
| C655 | 4030011600 | S.CER C1608 JB 1E 104K-T | T | 69.8/1.7 |
| C656 | 4550007500 | S.TAN F931D106MBABMA | B | 63.6/9.2 |
| Eqv. | 4550006470 | S.TAN TEESVB2 1D 106M8R | | |
| C657 | 4030018510 | S.CER C2012 CH 1H 682J-T | T | 66.5/10.0 |
| C658 | 4030007050 | S.CER C1608 CH 1H 220J-T | T | 69.9/4.4 |
| C701 | 4030017840 | S.CER C2012 CH 1H 222J-T | T | 62.1/18.5 |
| C702 | 4030017840 | S.CER C2012 CH 1H 222J-T | T | 59.2/11.2 |
| C703 | 4550007500 | S.TAN F931D106MBABMA | B | 58.8/15.4 |
| Eqv. | 4550006470 | S.TAN TEESVB2 1D 106M8R | | |
| C704 | 4030011600 | S.CER C1608 JB 1E 104K-T | T | 62.4/11.4 |
| C705 | 4030011600 | S.CER C1608 JB 1E 104K-T | T | 65.6/18.2 |
| C706 | 4550007500 | S.TAN F931D106MBABMA | B | 57.8/19.4 |
| Eqv. | 4550006470 | S.TAN TEESVB2 1D 106M8R | | |
| C707 | 4030007050 | S.CER C1608 CH 1H 220J-T | T | 67.9/14.2 |
| C801 | 4030006860 | S.CER C1608 JB 1H 102K-T | T | 64.3/24.7 |
| C802 | 4030011600 | S.CER C1608 JB 1E 104K-T | T | 73.3/25.1 |
| C803 | 4550007480 | S.TAN F930J106MAABMA | B | 76.8/16.7 |
| C804 | 4030011600 | S.CER C1608 JB 1E 104K-T | T | 72.0/27.9 |
| C805 | 4550007520 | S.TAN F931A106MAABMA | B | 67.3/28.7 |
| C806 | 4030011600 | S.CER C1608 JB 1E 104K-T | T | 72.6/23.2 |
| C807 | 4550007500 | S.TAN F931D106MBABMA | B | 68.5/23.6 |
| Eqv. | 4550006470 | S.TAN TEESVB2 1D 106M8R | | |

## [DSP-TX UNIT]

| REF NO. | PARTS NO. | DESCRIPTION | M. | H/V LOCATION |
|---|---|---|---|---|
| C808 | 4030007050 | S.CER C1608 CH 1H 220J-T | T | 69.1/30.5 |
| C831 | 4030006860 | S.CER C1608 JB 1H 102K-T | T | 69.7/17.9 |
| C832 | 4030011600 | S.CER C1608 JB 1E 104K-T | T | 76.5/16.4 |
| C833 | 4550007480 | S.TAN F930J106MAABMA | B | 69.7/16.8 |
| C834 | 4030011600 | S.CER C1608 JB 1E 104K-T | T | 77.8/17.3 |
| C835 | 4550007520 | S.TAN F931A106MAABMA | B | 64.1/19.7 |
| C836 | 4030011600 | S.CER C1608 JB 1E 104K-T | T | 76.5/13.8 |
| C837 | 4550007500 | S.TAN F931D106MBABMA | B | 64.8/15.4 |
| Eqv. | 4550006470 | S.TAN TEESVB2 1D 106M8R | | |
| C838 | 4030007050 | S.CER C1608 CH 1H 220J-T | T | 73.7/20.5 |
| C871 | 4550007520 | S.TAN F931A106MAABMA | B | 75.5/29.5 |
| C872 | 4030011600 | S.CER C1608 JB 1E 104K-T | T | 73.5/27.9 |
| C873 | 4550007500 | S.TAN F931D106MBABMA | B | 75.7/24.4 |
| Eqv. | 4550006470 | S.TAN TEESVB2 1D 106M8R | | |
| C874 | 4030011600 | S.CER C1608 JB 1E 104K-T | T | 78.3/21.5 |
| C875 | 4030007050 | S.CER C1608 CH 1H 220J-T | T | 77.2/30.9 |
| C921 | 4550007510 | S.TAN F931C106MBABMA | B | 69.4/3.8 |
| C922 | 4030011600 | S.CER C1608 JB 1E 104K-T | T | 72.9/3.6 |
| C923 | 4550002830 | S.TAN TEESVD2 1V 685M12R | B | 75.5/6.1 |
| C924 | 4030011600 | S.CER C1608 JB 1E 104K-T | T | 81.9/8.0 |
| C925 | 4550007510 | S.TAN F931C106MBABMA | B | 71.2/9.4 |
| C926 | 4030011600 | S.CER C1608 JB 1E 104K-T | T | 72.9/9.0 |
| C927 | 4550002830 | S.TAN TEESVD2 1V 685M12R | B | 80.7/6.1 |
| C928 | 4030011600 | S.CER C1608 JB 1E 104K-T | T | 81.9/4.6 |
| C961 | 4030011600 | S.CER C1608 JB 1E 104K-T | B | 11.5/14.9 |
| C962 | 4550007520 | S.TAN F931A106MAABMA | B | 12.2/18.6 |
| C963 | 4030011600 | S.CER C1608 JB 1E 104K-T | B | 10.5/24.9 |
| C964 | 4550007520 | S.TAN F931A106MAABMA | B | 11.4/29.0 |
| | | | | |
| J921 | 6910013900 | CON IMSA-9180S-22A | | |
| J961 | 6910012460 | CON IMSA-9180S-30A | | |

Eqv.= This component is equivalent to the REF No. component listed above, and may be substituted on parts orders and repairs.

M.=Mounted side (T: Mounted on the Top side, B: Mounted on the Bottom side)
S.=Surface mount

## [SCOPE UNIT]

| REF NO. | PARTS NO. | DESCRIPTION | M. | H/V LOCATION |
|---|---|---|---|---|
| IC1 | 1110006180 | S.IC UPG2009TB-E3 | T | 85.1/9.7 |
| IC2 | 1180001771 | S.IC TA79L05F(TE12LF) | T | 24.5/95.7 |
| IC31 | 1110006180 | S.IC UPG2009TB-E3 | T | 86.5/14.1 |
| IC201 | 1180002650 | S.REG SI-3012KS-TL | T | 116.4/64.6 |
| IC401 | 1110006131 | S.IC UPC4094G2-E1-A | T | 15.6/88.7 |
| IC403 | 1110006131 | S.IC UPC4094G2-E1-A | T | 26.9/88.7 |
| IC404 | 1110006131 | S.IC UPC4094G2-E1-A | T | 44.0/87.7 |
| IC405 | 1110002700 | S.IC NJM2904M-TE1-#FMZB | T | 39.3/70.5 |
| IC501 | 1190002031 | S.IC AD7650ASTZ <FE> | T | 55.6/79.2 |
| IC502 | 1130006891 | S.IC TC7S04FU(TE85RF) | T | 57.8/88.1 |
| IC505 | 1180002630 | S.REG AD1582BRT-REEL7 [USA] | T | 55.4/94.7 |
| | 1180002631 | S.REG AD1582BRTZ-REEL7 <FE> [EUR] | | |
| | 1180002631 | S.REG AD1582BRTZ-REEL7 <FE> [UK] | | |
| IC601 | 1140012221 | S.IC TMS320C6711DZDP200 <FE> | T | 88.4/81.4 |
| IC602 | 1130011930 | S.IC SN74LVC1G04DCKR | T | 68.2/67.5 |
| IC603 | 1130011930 | S.IC SN74LVC1G04DCKR | T | 70.8/70.4 |
| IC604 | 1130008041 | S.IC TC7SH04FU(TE85LJF) | B | 67.5/74.7 |
| IC607 | 1110006411 | S.IC R3111N111A-TR-F | B | 104.2/81.1 |
| IC671 | 1130012394 | S.IC AT49BV001AN-55TU(SX2590G-3) | T | 112.8/82.9 |
| IC801 | 1130009230 | S.IC LMX2306TMX/NOPB | T | 65.6/36.6 |
| IC803 | 1130009691 | S.IC TC74HCT7007AF(F) S | B | 68.0/29.0 |
| IC820 | 1190001961 | S.IC AD9857ASTZ <FE> | T | 93.7/35.6 |
| IC903 | 1120002921 | S.IC ADM202EARNZ-REEL7 <FE> | T | 96.9/109.2 |
| IC904 | 1130005721 | S.IC TC7W04F(TE12LF) | T | 107.5/113.1 |
| IC905 | 1130005252 | S.IC TC74HC08AF(ELF) | B | 97.1/109.6 |
| IC906 | 1130009831 | S.IC TC74VHCT04AF(F) | B | 108.4/109.7 |
| | | | | |
| Q1 | 1530002060 | S.TRA 2SC4081 T106 R | T | 67.4/6.3 |
| Q2 | 1530003852 | S.TRA 2SC5551A-F-TD-E | T | 45.8/7.5 |
| Q11 | 1590000680 | S.TRA DTC114EUA T106 | T | 78.2/7.5 |
| Q12 | 1590000680 | S.TRA DTC114EUA T106 | T | 92.2/6.5 |
| Q31 | 1590000680 | S.TRA DTC114EUA T106 | T | 78.4/3.5 |
| Q32 | 1590000680 | S.TRA DTC114EUA T106 | T | 92.7/3.5 |
| Q33 | 1590000680 | S.TRA DTC114EUA T106 | T | 93.0/15.4 |
| Q101 | 1530003151 | S.TRA 2SC4673D-TD-E | T | 28.9/18.3 |
| Q201 | 1560000561 | S.FET 2SK882-GR(TE85LF) | T | 11.5/40.4 |
| Q202 | 1560000561 | S.FET 2SK882-GR(TE85LF) | T | 10.1/45.2 |
| Q301 | 1530003151 | S.TRA 2SC4673D-TD-E | T | 21.5/68.0 |
| Q701 | 1530003221 | S.TRA 2SC4406-4-TL-E | T | 75.4/54.3 |
| Q720 | 1530003221 | S.TRA 2SC4406-4-TL-E | T | 102.0/45.5 |
| Q810 | 1530003221 | S.TRA 2SC4406-4-TL-E | T | 73.2/37.8 |
| Q821 | 1560000331 | S.FET 2SK210-GR(TE85RF) | T | 43.3/45.8 |
| Q841 | 1530002060 | S.TRA 2SC4081 T106 R | T | 41.5/37.2 |
| Q842 | 1530003432 | S.TRA 2SC5226A-4-TL-E | T | 27.5/31.7 |
| Q843 | 1530003432 | S.TRA 2SC5226A-4-TL-E | T | 25.1/39.9 |
| Q872 | 1590000680 | S.TRA DTC114EUA T106 | T | 30.2/32.6 |
| Q903 | 1530002280 | S.TRA 2SC4081 T106 S | B | 130.2/111.9 |
| Q904 | 1510000510 | S.TRA 2SA1576A T106R | B | 126.1/105.8 |
| Q921 | 1590001330 | S.TRA DTA114EUA T106 | T | 54.5/112.7 |
| Q922 | 1590000680 | S.TRA DTC114EUA T106 | T | 50.7/112.7 |
| Q923 | 1590001330 | S.TRA DTA114EUA T106 | T | 43.0/113.5 |
| Q924 | 1590000680 | S.TRA DTC114EUA T106 | T | 40.4/113.5 |
| | | | | |
| D1 | 1750000971 | S.DIO CPH5513-TL-E | T | 79.7/14.9 |
| D2 | 1750000971 | S.DIO CPH5513-TL-E | T | 72.5/15.9 |
| D3 | 1750000441 | S.DIO 1SV263-TL-E | T | 72.1/12.9 |
| D4 | 1750000431 | S.DIO HSB88WSTR-E | T | 10.4/68.3 |
| D11 | 1790000620 | S.DIO MA77(TX) | T | 83.2/4.6 |
| D12 | 1790000620 | S.DIO MA77(TX) | T | 87.2/4.6 |
| D101 | 1750000431 | S.DIO HSB88WSTR-E | T | 25.7/8.3 |
| D201 | 1710000840 | S.DIO 1SR154-400 TE25 | B | 120.3/65.1 |
| D401 | 1790001251 | S.DIO MA2S1110GL | T | 41.2/77.1 |
| D402 | 1790001251 | S.DIO MA2S1110GL | T | 40.0/75.2 |
| D403 | 1790001251 | S.DIO MA2S1110GL | T | 33.4/69.5 |
| D821 | 1750000681 | S.VAR 1SV232(TPH2F) | T | 57.9/43.2 |
| D822 | 1750000681 | S.VAR 1SV232(TPH2F) | T | 57.9/45.0 |
| D902 | 1750000550 | S.DIO 1SS355 TE-17 | B | 129.7/109.6 |
| | | | | |
| FI201 | 2030000290 | S.MON DSF753SBF 45 MHz (FL-357) | T | 9.3/29.6 |
| FI501 | 2040000790 | S.LC EXCCET103U | T | 71.3/76.0 |
| | | | | |
| L1 | 6200001831 | S.COI NLV32T-100J | T | 76.3/12.8 |
| L2 | 6200001831 | S.COI NLV32T-100J | T | 75.1/19.1 |
| L3 | 6200001831 | S.COI NLV32T-100J | B | 70.7/15.2 |
| L4 | 6200001831 | S.COI NLV32T-100J | T | 67.3/12.1 |
| L5 | 6150004280 | COI LS-484B (C-14927) | | |
| L6 | 6150004280 | COI LS-484B (C-14927) | | |
| L7 | 6200003261 | S.COI NLV32T-101J | T | 52.0/16.7 |
| L8 | 6140003790 | COI LR-442 | | |
| L9 | 6200001831 | S.COI NLV32T-100J | T | 41.2/7.6 |
| L10 | 6200001831 | S.COI NLV32T-100J | T | 41.2/3.3 |
| L11 | 6200001831 | S.COI NLV32T-100J | T | 57.3/3.5 |
| L12 | 6200010450 | S.COI C2520C-R82G-A (0.82U) | T | 57.7/15.5 |
| L13 | 6200010940 | S.COI C2520C-39NG-A | T | 68.3/20.0 |
| L14 | 6200010860 | S.COI C2520C-R10G-A (0.1U) | T | 64.2/19.3 |
| L31 | 6200001831 | S.COI NLV32T-100J | B | 82.6/1.8 |
| L32 | 6200001831 | S.COI NLV32T-100J | B | 78.8/5.2 |
| L33 | 6200001831 | S.COI NLV32T-100J | B | 86.6/6.1 |
| L34 | 6200001831 | S.COI NLV32T-100J | B | 90.7/3.7 |
| L51 | 6200001831 | S.COI NLV32T-100J | B | 122.1/107.2 |
| L52 | 6200001831 | S.COI NLV32T-100J | B | 77.2/122.3 |
| L53 | 6200001831 | S.COI NLV32T-100J | B | 77.2/117.4 |
| L54 | 6200001831 | S.COI NLV32T-100J | T | 85.8/112.8 |
| L55 | 6200003950 | S.COI HF50ACC 322513-T | B | 95.6/107.2 |
| L56 | 6200003950 | S.COI HF50ACC 322513-T | B | 63.9/107.4 |
| L57 | 6200003950 | S.COI HF50ACC 322513-T | T | 121.2/27.1 |
| L58 | 6200003950 | S.COI HF50ACC 322513-T | B | 119.4/39.2 |
| L59 | 6200003950 | S.COI HF50ACC 322513-T | T | 119.6/34.4 |
| L60 | 6200003950 | S.COI HF50ACC 322513-T | T | 119.6/37.6 |
| L101 | 6140003530 | COI LR-395 | | |
| L102 | 6140003530 | COI LR-395 | | |

## [SCOPE UNIT]

| REF NO. | PARTS NO. | DESCRIPTION | M. | H/V LOCATION |
|---|---|---|---|---|
| L103 | 6200003021 | S.COI NLV32T-R33J | T | 22.4/19.7 |
| L104 | 6200001920 | S.COI ELJNC R15K-F | B | 22.7/16.5 |
| L201 | 6150004250 | COI LS-471A (C-14922) | | |
| L202 | 6150004280 | COI LS-484B (C-14927) | | |
| L203 | 6150004280 | COI LS-484B (C-14927) | | |
| L204 | 6200001831 | S.COI NLV32T-100J | B | 3.3/46.7 |
| L205 | 6200002431 | S.COI NLV25T-082J | B | 10.5/17.7 |
| L301 | 6140003530 | COI LR-395 | | |
| L302 | 6140003530 | COI LR-395 | | |
| L303 | 6200003041 | S.COI NLV32T-R68J | T | 21.0/74.1 |
| L304 | 6200001831 | S.COI NLV32T-100J | B | 23.2/72.6 |
| L401 | 6200003171 | S.COI NLV32T-330J | T | 10.4/83.2 |
| L501 | 6200001831 | S.COI NLV32T-100J | T | 53.8/64.3 |
| L502 | 6200001831 | S.COI NLV32T-100J | B | 57.6/69.6 |
| L551 | 6180003501 | S.COI SLF6028T-100M1R3-PF | T | 105.9/64.4 |
| L552 | 6200001831 | S.COI NLV32T-100J | T | 106.3/69.9 |
| L671 | 6200001831 | S.COI NLV32T-100J | T | 110.9/69.9 |
| L701 | 6200005491 | S.COI NLV32T-331J | T | 76.1/51.5 |
| L720 | 6200001831 | S.COI NLV32T-100J | T | 82.1/34.6 |
| L721 | 6200001831 | S.COI NLV32T-100J | T | 109.4/41.1 |
| L722 | 6200001831 | S.COI NLV32T-100J | T | 110.8/45.2 |
| L761 | 6200003011 | S.COI NLV32T-R27J | T | 106.3/22.3 |
| L762 | 6200003021 | S.COI NLV32T-R33J | T | 102.7/23.1 |
| L763 | 6200003251 | S.COI NLV32T-R39J | T | 97.9/22.4 |
| L764 | 6200003251 | S.COI NLV32T-R39J | T | 93.6/23.5 |
| L801 | 6200005491 | S.COI NLV32T-331J | T | 69.7/40.9 |
| L802 | 6200005491 | S.COI NLV32T-331J | T | 70.3/26.7 |
| L821 | 6200001831 | S.COI NLV32T-100J | T | 61.8/45.8 |
| L822 | 6190001441 | COI #E526GN-110504 | | |
| L823 | 6200001851 | S.COI NLV32T-5R6J | T | 40.8/42.2 |
| L825 | 6200003261 | S.COI NLV32T-101J | T | 51.8/52.3 |
| L841 | 6200003261 | S.COI NLV32T-101J | B | 26.8/33.1 |
| L842 | 6200003031 | S.COI NLV32T-R47J | T | 26.8/34.6 |
| L851 | 6200003431 | S.COI NLV32T-R10J | T | 27.4/45.1 |
| L852 | 6200001471 | S.COI NLV32T-R12J | T | 27.0/48.9 |
| L902 | 6200003241 | S.COI NLV32T-221J | T | 128.1/107.8 |
| | | | | |
| R1 | 7030003360 | S.RES ERJ3GEYJ 221 V (220) | T | 79.6/12.6 |
| R2 | 7030003480 | S.RES ERJ3GEYJ 222 V (2.2K) | T | 70.7/10.8 |
| R3 | 7030003440 | S.RES ERJ3GEYJ 102 V (1K) | T | 70.7/9.5 |
| R4 | 7030003460 | S.RES ERJ3GEYJ 152 V (1.5K) | T | 67.9/8.2 |
| R5 | 7030003520 | S.RES ERJ3GEYJ 472 V (4.7K) | T | 66.6/4.4 |
| R6 | 7030003440 | S.RES ERJ3GEYJ 102 V (1K) | T | 69.4/5.0 |
| R7 | 7030003290 | S.RES ERJ3GEYJ 560 V (56) | T | 49.9/17.4 |
| R8 | 7030003440 | S.RES ERJ3GEYJ 102 V (1K) | T | 48.4/3.5 |
| R9 | 7030003500 | S.RES ERJ3GEYJ 332 V (3.3K) | T | 46.0/4.3 |
| R11 | 7310005400 | S.TRI EVM3VBE4 22K (22K) | T | 61.7/3.8 |
| R12 | 7030003320 | S.RES ERJ3GEYJ 101 V (100) | T | 46.8/10.7 |
| R14 | 7030003340 | S.RES ERJ3GEYJ 151 V (150) | T | 82.3/2.4 |
| R16 | 7030003440 | S.RES ERJ3GEYJ 102 V (1K) | T | 80.3/6.7 |
| R17 | 7030003440 | S.RES ERJ3GEYJ 102 V (1K) | T | 81.6/6.7 |
| R18 | 7030003340 | S.RES ERJ3GEYJ 151 V (150) | T | 87.5/2.4 |
| R20 | 7030003440 | S.RES ERJ3GEYJ 102 V (1K) | T | 90.2/6.7 |
| R21 | 7030003440 | S.RES ERJ3GEYJ 102 V (1K) | T | 88.9/6.7 |
| R34 | 7030003440 | S.RES ERJ3GEYJ 102 V (1K) | T | 78.4/5.5 |
| R35 | 7030003440 | S.RES ERJ3GEYJ 102 V (1K) | T | 89.5/3.6 |
| R36 | 7030003520 | S.RES ERJ3GEYJ 472 V (4.7K) | T | 91.0/14.7 |
| R37 | 7030003500 | S.RES ERJ3GEYJ 332 V (3.3K) | T | 89.7/14.7 |
| R38 | 7030003520 | S.RES ERJ3GEYJ 472 V (4.7K) | T | 82.0/14.0 |
| R39 | 7030003500 | S.RES ERJ3GEYJ 332 V (3.3K) | T | 83.3/14.0 |
| R51 | 7030003520 | S.RES ERJ3GEYJ 472 V (4.7K) | T | 80.6/9.8 |
| R52 | 7030003520 | S.RES ERJ3GEYJ 472 V (4.7K) | T | 90.3/9.9 |
| R53 | 7030003320 | S.RES ERJ3GEYJ 101 V (100) | B | 126.0/32.4 |
| R54 | 7030003500 | S.RES ERJ3GEYJ 332 V (3.3K) | T | 81.9/9.8 |
| R55 | 7030003500 | S.RES ERJ3GEYJ 332 V (3.3K) | T | 88.4/9.8 |
| R61 | 7030003320 | S.RES ERJ3GEYJ 101 V (100) | B | 128.7/49.0 |
| R62 | 7030003320 | S.RES ERJ3GEYJ 101 V (100) | T | 122.4/50.4 |
| R63 | 7030003320 | S.RES ERJ3GEYJ 101 V (100) | B | 128.7/51.0 |
| R64 | 7030003320 | S.RES ERJ3GEYJ 101 V (100) | T | 122.4/53.4 |
| R65 | 7030003320 | S.RES ERJ3GEYJ 101 V (100) | B | 128.7/53.0 |
| R66 | 7030003320 | S.RES ERJ3GEYJ 101 V (100) | T | 123.7/56.8 |
| R71 | 7030003320 | S.RES ERJ3GEYJ 101 V (100) | B | 128.7/55.0 |
| R72 | 7030003320 | S.RES ERJ3GEYJ 101 V (100) | T | 121.7/47.4 |
| R73 | 7030003320 | S.RES ERJ3GEYJ 101 V (100) | T | 121.7/43.4 |
| R74 | 7030003320 | S.RES ERJ3GEYJ 101 V (100) | B | 128.7/43.4 |
| R75 | 7030003320 | S.RES ERJ3GEYJ 101 V (100) | T | 121.8/44.7 |
| R76 | 7030003320 | S.RES ERJ3GEYJ 101 V (100) | B | 128.8/45.4 |
| R77 | 7030003320 | S.RES ERJ3GEYJ 101 V (100) | T | 121.8/46.0 |
| R81 | 7030010520 | S.RES ERJ1TYJ 101U (100) | B | 122.9/46.2 |
| R103 | 7030003480 | S.RES ERJ3GEYJ 222 V (2.2K) | T | 33.9/18.1 |
| R104 | 7030003320 | S.RES ERJ3GEYJ 101 V (100) | T | 26.0/21.9 |
| R105 | 7030003370 | S.RES ERJ3GEYJ 271 V (270) | B | 18.4/14.3 |
| R106 | 7030003230 | S.RES ERJ3GEYJ 180 V (18) | B | 19.1/11.9 |
| R107 | 7030003370 | S.RES ERJ3GEYJ 271 V (270) | B | 18.4/8.4 |
| R108 | 7030003370 | S.RES ERJ3GEYJ 271 V (270) | B | 14.6/8.4 |
| R109 | 7030003230 | S.RES ERJ3GEYJ 180 V (18) | B | 11.2/9.7 |
| R110 | 7030003370 | S.RES ERJ3GEYJ 271 V (270) | B | 11.2/12.0 |
| R111 | 7030003550 | S.RES ERJ3GEYJ 822 V (8.2K) | T | 29.9/15.0 |
| R112 | 7030003320 | S.RES ERJ3GEYJ 101 V (100) | T | 33.9/19.4 |
| R113 | 7030003860 | S.RES ERJ3GE JPW V | B | 19.5/18.0 |
| R201 | 7030003430 | S.RES ERJ3GEYJ 821 V (820) | T | 11.3/37.2 |
| R202 | 7030003430 | S.RES ERJ3GEYJ 821 V (820) | T | 11.3/35.9 |
| R203 | 7030003280 | S.RES ERJ3GEYJ 470 V (47) | B | 3.1/39.9 |
| R204 | 7030003560 | S.RES ERJ3GEYJ 103 V (10K) | T | 12.0/45.1 |
| R205 | 7030003280 | S.RES ERJ3GEYJ 470 V (47) | B | 6.3/46.7 |
| R206 | 7030003380 | S.RES ERJ3GEYJ 331 V (330) | B | 11.4/55.0 |
| R207 | 7030003220 | S.RES ERJ3GEYJ 150 V (15) | B | 9.4/55.7 |
| R208 | 7030003380 | S.RES ERJ3GEYJ 331 V (330) | B | 10.1/57.8 |
| R209 | 7030003640 | S.RES ERJ3GEYJ 473 V (47K) | B | 9.9/46.7 |
| R210 | 7030003600 | S.RES ERJ3GEYJ 223 V (22K) | T | 112.9/63.4 |
| R301 | 7030003320 | S.RES ERJ3GEYJ 101 V (100) | T | 9.8/86.7 |
| R302 | 7030003370 | S.RES ERJ3GEYJ 271 V (270) | B | 10.4/75.4 |
| R303 | 7030003230 | S.RES ERJ3GEYJ 180 V (18) | B | 15.3/74.7 |
| R304 | 7030003370 | S.RES ERJ3GEYJ 271 V (270) | B | 19.2/75.4 |

Eqv.= This component is equivalent to the REF No. component listed above, and may be substituted on parts orders and repairs.

M.=Mounted side (T: Mounted on the Top side, B: Mounted on the Bottom side)
S.=Surface mount

## [SCOPE UNIT]

| REF NO. | PARTS NO. | DESCRIPTION | M. | H/V LOCATION |
|---|---|---|---|---|
| R305 | 7030003320 | S.RES ERJ3GEYJ 101 V (100) | T | 23.8/74.0 |
| R306 | 7030003480 | S.RES ERJ3GEYJ 222 V (2.2K) | T | 21.4/63.5 |
| R307 | 7030003550 | S.RES ERJ3GEYJ 822 V (8.2K) | T | 18.3/67.0 |
| R308 | 7030003340 | S.RES ERJ3GEYJ 151 V (150) | T | 24.4/63.5 |
| R402 | 7030003440 | S.RES ERJ3GEYJ 102 V (1K) | B | 13.5/89.7 |
| R403 | 7030003440 | S.RES ERJ3GEYJ 102 V (1K) | B | 16.4/90.5 |
| R404 | 7030003440 | S.RES ERJ3GEYJ 102 V (1K) | B | 19.0/86.8 |
| R405 | 7030003440 | S.RES ERJ3GEYJ 102 V (1K) | B | 22.4/90.6 |
| R410 | 7030003560 | S.RES ERJ3GEYJ 103 V (10K) | T | 21.4/85.9 |
| R411 | 7030003560 | S.RES ERJ3GEYJ 103 V (10K) | T | 9.3/91.2 |
| R412 | 7030003560 | S.RES ERJ3GEYJ 103 V (10K) | T | 13.5/92.1 |
| R413 | 7030003730 | S.RES ERJ3GEYJ 274 V (270K) | T | 9.8/89.3 |
| R414 | 7030003560 | S.RES ERJ3GEYJ 103 V (10K) | B | 26.9/88.0 |
| R415 | 7030003560 | S.RES ERJ3GEYJ 103 V (10K) | T | 31.6/90.1 |
| R416 | 7310005470 | S.TRI EVM-3VSX50 BQ5 470K (470K) | T | 34.5/87.0 |
| R417 | 7030003630 | S.RES ERJ3GEYJ 393 V (39K) | T | 43.1/95.5 |
| R418 | 7030003570 | S.RES ERJ3GEYJ 123 V (12K) | T | 45.4/92.2 |
| R419 | 7030003220 | S.RES ERJ3GEYJ 150 V (15) | T | 48.0/92.4 |
| R420 | 7030003580 | S.RES ERJ3GEYJ 153 V (15K) | T | 40.9/81.8 |
| R421 | 7030003560 | S.RES ERJ3GEYJ 103 V (10K) | T | 40.5/85.5 |
| R422 | 7030003560 | S.RES ERJ3GEYJ 103 V (10K) | T | 42.6/92.2 |
| R423 | 7030003540 | S.RES ERJ3GEYJ 682 V (6.8K) | T | 43.2/94.2 |
| R425 | 7310005760 | S.TRI EVM-3VSX50 B14 10K (10K) | T | 45.3/81.3 |
| R426 | 7030003560 | S.RES ERJ3GEYJ 103 V (10K) | T | 48.8/76.5 |
| R427 | 7030003560 | S.RES ERJ3GEYJ 103 V (10K) | T | 39.9/77.2 |
| R428 | 7030003680 | S.RES ERJ3GEYJ 104 V (100K) | T | 37.0/75.8 |
| R429 | 7030003650 | S.RES ERJ3GEYJ 563 V (56K) | T | 34.7/67.8 |
| R430 | 7030003740 | S.RES ERJ3GEYJ 334 V (330K) | T | 38.9/73.9 |
| R431 | 7030003740 | S.RES ERJ3GEYJ 334 V (330K) | T | 36.3/73.9 |
| R432 | 7030003640 | S.RES ERJ3GEYJ 473 V (47K) | T | 39.6/81.8 |
| R433 | 7030003680 | S.RES ERJ3GEYJ 104 V (100K) | T | 38.9/66.4 |
| R434 | 7030003320 | S.RES ERJ3GEYJ 101 V (100) | T | 33.4/66.9 |
| R435 | 7030003680 | S.RES ERJ3GEYJ 104 V (100K) | T | 40.2/66.4 |
| R436 | 7030003680 | S.RES ERJ3GEYJ 104 V (100K) | T | 37.0/67.0 |
| R437 | 7030003680 | S.RES ERJ3GEYJ 104 V (100K) | T | 43.9/67.8 |
| R438 | 7030003680 | S.RES ERJ3GEYJ 104 V (100K) | T | 43.9/70.5 |
| R500 | 7030003860 | S.RES ERJ3GE JPW V | T | 53.3/71.7 |
| R501 | 7030003320 | S.RES ERJ3GEYJ 101 V (100) | T | 55.2/73.0 |
| R502 | 7030003560 | S.RES ERJ3GEYJ 103 V (10K) | B | 56.3/74.7 |
| R503 | 7030003560 | S.RES ERJ3GEYJ 103 V (10K) | B | 59.2/75.4 |
| R504 | 7030003560 | S.RES ERJ3GEYJ 103 V (10K) | T | 60.9/74.2 |
| R505 | 7030003560 | S.RES ERJ3GEYJ 103 V (10K) | T | 61.6/76.1 |
| R506 | 7030003560 | S.RES ERJ3GEYJ 103 V (10K) | B | 57.3/78.2 |
| R507 | 7030003320 | S.RES ERJ3GEYJ 101 V (100) | T | 61.5/87.2 |
| R509 | 7030003640 | S.RES ERJ3GEYJ 473 V (47K) | T | 60.6/89.8 |
| R602 | 7030003560 | S.RES ERJ3GEYJ 103 V (10K) | B | 101.3/75.6 |
| R603 | 7030003440 | S.RES ERJ3GEYJ 102 V (1K) | B | 83.8/77.4 |
| R604 | 7030003560 | S.RES ERJ3GEYJ 103 V (10K) | B | 92.2/67.5 |
| R605 | 7030003560 | S.RES ERJ3GEYJ 103 V (10K) | B | 89.9/65.9 |
| R606 | 7030003440 | S.RES ERJ3GEYJ 102 V (1K) | T | 79.6/95.9 |
| R607 | 7030003440 | S.RES ERJ3GEYJ 102 V (1K) | B | 77.6/95.9 |
| R608 | 7030003440 | S.RES ERJ3GEYJ 102 V (1K) | B | 71.8/88.2 |
| R609 | 7030003560 | S.RES ERJ3GEYJ 103 V (10K) | T | 83.5/65.9 |
| R610 | 7030003800 | S.RES ERJ3GEYJ 105 V (1M) | T | 70.6/67.6 |
| R611 | 7030004040 | S.RES ERJ3GEYJ 4R7 V (4.7) | T | 66.3/70.4 |
| R612 | 7030004040 | S.RES ERJ3GEYJ 4R7 V (4.7) | T | 67.6/70.4 |
| R615 | 7030003320 | S.RES ERJ3GEYJ 101 V (100) | T | 73.0/65.8 |
| R616 | 7030003520 | S.RES ERJ3GEYJ 472 V (4.7K) | T | 73.8/93.6 |
| R617 | 7030003520 | S.RES ERJ3GEYJ 472 V (4.7K) | T | 72.5/93.6 |
| R618 | 7030003560 | S.RES ERJ3GEYJ 103 V (10K) | B | 81.8/66.9 |
| R619 | 7030003560 | S.RES ERJ3GEYJ 103 V (10K) | B | 88.0/66.8 |
| R620 | 7030003440 | S.RES ERJ3GEYJ 102 V (1K) | B | 73.2/88.9 |
| R621 | 7030003440 | S.RES ERJ3GEYJ 102 V (1K) | B | 72.7/84.7 |
| R622 | 7030003860 | S.RES ERJ3GE JPW V | B | 111.9/79.5 |
| R623 | 7030003860 | S.RES ERJ3GE JPW V | B | 106.2/78.5 |
| R633 | 7030003560 | S.RES ERJ3GEYJ 103 V (10K) | B | 74.7/74.4 |
| R634 | 7030003860 | S.RES ERJ3GE JPW V | T | 74.0/70.5 |
| R635 | 7030003280 | S.RES ERJ3GEYJ 470 V (47) | T | 73.5/68.4 |
| R636 | 7030003280 | S.RES ERJ3GEYJ 470 V (47) | T | 72.7/70.5 |
| R701 | 7030003240 | S.RES ERJ3GEYJ 220 V (22) | T | 73.0/51.7 |
| R702 | 7030003560 | S.RES ERJ3GEYJ 103 V (10K) | T | 77.4/54.4 |
| R703 | 7030003320 | S.RES ERJ3GEYJ 101 V (100) | T | 72.7/55.2 |
| R704 | 7030003280 | S.RES ERJ3GEYJ 470 V (47) | T | 73.3/57.1 |
| R705 | 7030003340 | S.RES ERJ3GEYJ 151 V (150) | T | 77.4/57.1 |
| R720 | 7030003370 | S.RES ERJ3GEYJ 271 V (270) | T | 107.1/43.2 |
| R721 | 7030003560 | S.RES ERJ3GEYJ 103 V (10K) | T | 104.0/45.4 |
| R722 | 7030003340 | S.RES ERJ3GEYJ 151 V (150) | T | 107.2/46.0 |
| R723 | 7030003440 | S.RES ERJ3GEYJ 102 V (1K) | B | 91.8/28.7 |
| R724 | 7030003440 | S.RES ERJ3GEYJ 102 V (1K) | B | 91.1/30.6 |
| R725 | 7030003440 | S.RES ERJ3GEYJ 102 V (1K) | B | 87.6/28.5 |
| R726 | 7030003440 | S.RES ERJ3GEYJ 102 V (1K) | B | 91.2/26.8 |
| R727 | 7030003440 | S.RES ERJ3GEYJ 102 V (1K) | B | 94.8/43.1 |
| R729 | 7030003280 | S.RES ERJ3GEYJ 470 V (47) | T | 98.7/45.7 |
| R730 | 7030003560 | S.RES ERJ3GEYJ 103 V (10K) | B | 96.5/40.1 |
| R731 | 7030003460 | S.RES ERJ3GEYJ 152 V (1.5K) | T | 105.2/38.7 |
| R732 | 7030003510 | S.RES ERJ3GEYJ 392 V (3.9K) | T | 106.5/34.2 |
| R734 | 7030003510 | S.RES ERJ3GEYJ 392 V (3.9K) | T | 102.6/42.8 |
| R735 | 7030003280 | S.RES ERJ3GEYJ 470 V (47) | T | 106.5/30.9 |
| R736 | 7030003280 | S.RES ERJ3GEYJ 470 V (47) | T | 106.5/32.2 |
| R737 | 7030003440 | S.RES ERJ3GEYJ 102 V (1K) | T | 88.4/24.1 |
| R738 | 7030003640 | S.RES ERJ3GEYJ 473 V (47K) | T | 88.2/46.1 |
| R739 | 7030003510 | S.RES ERJ3GEYJ 392 V (3.9K) | T | 106.5/35.5 |
| R741 | 7030003860 | S.RES ERJ3GE JPW V | B | 109.8/26.3 |
| R742 | 7030003860 | S.RES ERJ3GE JPW V | T | 86.9/46.1 |
| R744 | 7030003860 | S.RES ERJ3GE JPW V | T | 87.7/26.2 |
| R745 | 7030003860 | S.RES ERJ3GE JPW V | T | 85.1/27.5 |
| R748 | 7030003860 | S.RES ERJ3GE JPW V | T | 89.8/24.1 |
| R764 | 7030003370 | S.RES ERJ3GEYJ 271 V (270) | T | 48.1/21.6 |
| R765 | 7030003230 | S.RES ERJ3GEYJ 180 V (18) | T | 45.6/20.8 |
| R766 | 7030003370 | S.RES ERJ3GEYJ 271 V (270) | T | 43.4/21.6 |
| R767 | 7030003860 | S.RES ERJ3GE JPW V | T | 95.8/21.6 |
| R771 | 7030003860 | S.RES ERJ3GE JPW V | T | 41.0/20.8 |
| R801 | 7030003440 | S.RES ERJ3GEYJ 102 V (1K) | B | 68.2/38.1 |
| R802 | 7030003440 | S.RES ERJ3GEYJ 102 V (1K) | B | 71.2/35.6 |
| R803 | 7030003440 | S.RES ERJ3GEYJ 102 V (1K) | B | 68.2/35.7 |

## [SCOPE UNIT]

| REF NO. | PARTS NO. | DESCRIPTION | M. | H/V LOCATION |
|---|---|---|---|---|
| R806 | 7030003520 | S.RES ERJ3GEYJ 472 V (4.7K) | T | 62.5/40.1 |
| R808 | 7030003600 | S.RES ERJ3GEYJ 223 V (22K) | T | 61.7/42.6 |
| R809 | 7030003840 | S.RES ERJ3GEYJ 225 V (2.2M) | T | 64.0/41.7 |
| R810 | 7030003370 | S.RES ERJ3GEYJ 271 V (270) | T | 74.1/35.2 |
| R811 | 7030003560 | S.RES ERJ3GEYJ 103 V (10K) | T | 73.9/40.3 |
| R812 | 7030003280 | S.RES ERJ3GEYJ 470 V (47) | T | 71.0/31.6 |
| R813 | 7030003340 | S.RES ERJ3GEYJ 151 V (150) | T | 73.9/45.5 |
| R814 | 7030003500 | S.RES ERJ3GEYJ 332 V (3.3K) | T | 60.3/41.1 |
| R821 | 7030003680 | S.RES ERJ3GEYJ 104 V (100K) | T | 39.4/46.0 |
| R822 | 7030003680 | S.RES ERJ3GEYJ 104 V (100K) | T | 46.9/44.7 |
| R823 | 7030003370 | S.RES ERJ3GEYJ 271 V (270) | T | 43.5/41.8 |
| R841 | 7030003200 | S.RES ERJ3GEYJ 100 V (10) | T | 38.0/39.9 |
| R842 | 7030003360 | S.RES ERJ3GEYJ 221 V (220) | T | 42.2/35.1 |
| R843 | 7030003500 | S.RES ERJ3GEYJ 332 V (3.3K) | T | 40.2/39.2 |
| R844 | 7030003540 | S.RES ERJ3GEYJ 682 V (6.8K) | T | 38.7/37.9 |
| R845 | 7030003360 | S.RES ERJ3GEYJ 221 V (220) | T | 38.7/36.6 |
| R846 | 7030003380 | S.RES ERJ3GEYJ 331 V (330) | T | 40.4/32.1 |
| R847 | 7030003370 | S.RES ERJ3GEYJ 271 V (270) | T | 30.5/30.0 |
| R848 | 7030003540 | S.RES ERJ3GEYJ 682 V (6.8K) | T | 28.4/37.3 |
| R849 | 7030003500 | S.RES ERJ3GEYJ 332 V (3.3K) | T | 30.4/34.8 |
| R850 | 7030003390 | S.RES ERJ3GEYJ 391 V (390) | T | 26.6/37.9 |
| R851 | 7030003360 | S.RES ERJ3GEYJ 221 V (220) | T | 24.4/37.1 |
| R852 | 7030003490 | S.RES ERJ3GEYJ 272 V (2.7K) | T | 28.5/40.1 |
| R853 | 7030003510 | S.RES ERJ3GEYJ 392 V (3.9K) | T | 30.4/41.1 |
| R854 | 7030003360 | S.RES ERJ3GEYJ 221 V (220) | T | 30.2/42.4 |
| R855 | 7030008180 | S.RES ERJ12YJ331U (330) | T | 42.5/53.0 |
| R856 | 7030003370 | S.RES ERJ3GEYJ 271 V (270) | T | 23.0/60.4 |
| R857 | 7030003230 | S.RES ERJ3GEYJ 180 V (18) | T | 20.7/59.6 |
| R858 | 7030003320 | S.RES ERJ3GEYJ 101 V (100) | T | 20.7/61.1 |
| R859 | 7030003260 | S.RES ERJ3GEYJ 330 V (33) | T | 24.4/44.2 |
| R860 | 7030003400 | S.RES ERJ3GEYJ 471 V (470) | T | 42.5/32.1 |
| R861 | 7030003860 | S.RES ERJ3GE JPW V | T | 24.4/60.4 |
| R905 | 7030003620 | S.RES ERJ3GEYJ 333 V (33K) | B | 127.0/108.8 |
| R906 | 7030003540 | S.RES ERJ3GEYJ 682 V (6.8K) | B | 128.6/105.9 |
| R907 | 7030003580 | S.RES ERJ3GEYJ 153 V (15K) | B | 127.3/111.2 |
| R908 | 7030003640 | S.RES ERJ3GEYJ 473 V (47K) | B | 125.0/108.9 |
| R913 | 7030003370 | S.RES ERJ3GEYJ 271 V (270) | T | 57.4/112.7 |
| R914 | 7030003370 | S.RES ERJ3GEYJ 271 V (270) | T | 45.9/113.5 |
| R951 | 7030003860 | S.RES ERJ3GE JPW V | B | 120.5/122.7 |
| R952 | 7030003860 | S.RES ERJ3GE JPW V | B | 97.5/126.4 |
| R953 | 7030003860 | S.RES ERJ3GE JPW V | B | 97.5/124.8 |
| R954 | 7030003860 | S.RES ERJ3GE JPW V | B | 114.8/103.7 |
| R955 | 7030003860 | S.RES ERJ3GE JPW V | T | 48.6/112.9 |
| R956 | 7030003860 | S.RES ERJ3GE JPW V | T | 39.7/110.7 |
| | | | | |
| C1 | 4030006880 | S.CER C1608 JB 1H 472K-T | T | 84.2/6.7 |
| C2 | 4030006880 | S.CER C1608 JB 1H 472K-T | T | 86.2/6.7 |
| C3 | 4030006880 | S.CER C1608 JB 1H 472K-T | T | 82.8/15.8 |
| C4 | 4030011340 | S.CER C1608 CH 1H 471J-T | T | 76.6/16.2 |
| C5 | 4030011340 | S.CER C1608 CH 1H 471J-T | T | 74.1/12.9 |
| C6 | 4030006880 | S.CER C1608 JB 1H 472K-T | T | 74.9/16.2 |
| C7 | 4030006880 | S.CER C1608 JB 1H 472K-T | T | 70.1/12.8 |
| C8 | 4030006880 | S.CER C1608 JB 1H 472K-T | T | 71.4/20.1 |
| C9 | 4030006880 | S.CER C1608 JB 1H 472K-T | T | 70.1/15.7 |
| C10 | 4030011600 | S.CER C1608 JB 1E 104K-T | T | 67.9/9.5 |
| C11 | 4030009510 | S.CER C1608 CH 1H 010B-T | B | 59.0/16.3 |
| C12 | 4030007040 | S.CER C1608 CH 1H 180J-T | B | 62.0/10.1 |
| C13 | 4030007040 | S.CER C1608 CH 1H 180J-T | B | 53.2/10.0 |
| C14 | 4030011340 | S.CER C1608 CH 1H 471J-T | B | 47.6/15.1 |
| C15 | 4030006880 | S.CER C1608 JB 1H 472K-T | T | 40.2/16.1 |
| C16 | 4030006880 | S.CER C1608 JB 1H 472K-T | T | 49.9/3.5 |
| C17 | 4030006880 | S.CER C1608 JB 1H 472K-T | B | 38.7/10.0 |
| C18 | 4030006960 | S.CER C1608 CH 1H 050C-T | T | 44.1/10.7 |
| C21 | 4030006880 | S.CER C1608 JB 1H 472K-T | T | 78.8/57.1 |
| C22 | 4030006880 | S.CER C1608 JB 1H 472K-T | B | 93.2/11.6 |
| C23 | 4030011600 | S.CER C1608 JB 1E 104K-T | T | 90.5/12.8 |
| C24 | 4030006880 | S.CER C1608 JB 1H 472K-T | T | 85.4/11.8 |
| C31 | 4030006880 | S.CER C1608 JB 1H 472K-T | T | 78.3/9.4 |
| C32 | 4030006880 | S.CER C1608 JB 1H 472K-T | T | 82.9/6.7 |
| C33 | 4030006880 | S.CER C1608 JB 1H 472K-T | T | 90.3/8.6 |
| C34 | 4030006880 | S.CER C1608 JB 1H 472K-T | T | 87.6/6.7 |
| C35 | 4030006900 | S.CER C1608 JB 1H 103K-T | T | 83.6/2.4 |
| C36 | 4030006900 | S.CER C1608 JB 1H 103K-T | T | 80.4/3.4 |
| C37 | 4030006900 | S.CER C1608 JB 1H 103K-T | T | 86.2/2.4 |
| C38 | 4030006900 | S.CER C1608 JB 1H 103K-T | T | 90.8/3.6 |
| C39 | 4030006860 | S.CER C1608 JB 1H 102K-T | T | 88.4/14.7 |
| C40 | 4030006860 | S.CER C1608 JB 1H 102K-T | T | 84.6/14.0 |
| C41 | 4610001830 | S.TRI TZB4S100AB10R00 (TZBX4N100BA110) | T | 57.6/19.4 |
| C42 | 4030007030 | S.CER C1608 CH 1H 150J-T | T | 68.8/15.7 |
| C43 | 4030007120 | S.CER C1608 CH 1H 820J-T | T | 67.9/17.7 |
| C44 | 4030007100 | S.CER C1608 CH 1H 560J-T | T | 67.0/15.7 |
| C45 | 4030007040 | S.CER C1608 CH 1H 180J-T | T | 64.9/16.5 |
| C46 | 4030008750 | S.CER C1608 CH 1H 360J-T | T | 64.9/14.9 |
| C51 | 4030006860 | S.CER C1608 JB 1H 102K-T | T | 83.2/9.8 |
| C52 | 4030006860 | S.CER C1608 JB 1H 102K-T | T | 87.1/9.8 |
| C53 | 4510008540 | S.ELE EEE1CA100SR | T | 31.7/95.8 |
| C54 | 4510008540 | S.ELE EEE1CA100SR | T | 47.0/69.3 |
| C55 | 4030011600 | S.CER C1608 JB 1E 104K-T | T | 20.4/94.9 |
| C56 | 4510008540 | S.ELE EEE1CA100SR | T | 16.6/95.9 |
| C57 | 4030011600 | S.CER C1608 JB 1E 104K-T | T | 27.9/96.0 |
| C101 | 4030006880 | S.CER C1608 JB 1H 472K-T | T | 33.9/16.8 |
| C102 | 4030007150 | S.CER C1608 CH 1H 151J-T | T | 24.7/19.0 |
| C103 | 4030011600 | S.CER C1608 JB 1E 104K-T | T | 24.7/21.9 |
| C106 | 4030006880 | S.CER C1608 JB 1H 472K-T | T | 33.9/20.7 |
| C107 | 4030007100 | S.CER C1608 CH 1H 560J-T | T | 23.1/16.5 |
| C108 | 4030007110 | S.CER C1608 CH 1H 680J-T | B | 23.8/21.2 |
| C109 | 4030007140 | S.CER C1608 CH 1H 121J-T | B | 22.4/18.8 |
| C110 | 4030007110 | S.CER C1608 CH 1H 680J-T | B | 21.7/21.2 |
| C201 | 4030007040 | S.CER C1608 CH 1H 180J-T | T | 10.9/24.6 |
| C202 | 4030007040 | S.CER C1608 CH 1H 180J-T | T | 4.7/30.3 |
| C204 | 4030006880 | S.CER C1608 JB 1H 472K-T | T | 11.3/34.6 |
| C205 | 4030007070 | S.CER C1608 CH 1H 330J-T | B | 5.9/39.9 |
| C206 | 4030006880 | S.CER C1608 JB 1H 472K-T | T | 11.3/38.5 |

Eqv.= This component is equivalent to the REF No. component listed above, and may be substituted on parts orders and repairs.

M.=Mounted side (T: Mounted on the Top side, B: Mounted on the Bottom side)
S.=Surface mount

## [SCOPE UNIT]

| REF NO. | PARTS NO. | DESCRIPTION | M. | H/V LOCATION |
|---|---|---|---|---|
| C207 | 4030006960 | S.CER C1608 CH 1H 050C-T | T | 11.3/42.3 |
| C208 | 4030007070 | S.CER C1608 CH 1H 330J-T | B | 8.4/51.1 |
| C209 | 4030006880 | S.CER C1608 JB 1H 472K-T | T | 7.7/46.1 |
| C210 | 4030011600 | S.CER C1608 JB 1E 104K-T | B | 2.2/50.3 |
| C211 | 4030009550 | S.CER C1608 CH 1H 2R5B-T | T | 10.9/23.2 |
| C212 | 4030006940 | S.CER C1608 CH 1H 030C-T | T | 4.7/28.9 |
| C213 | 4550007320 | S.TAN F930J226MAABMA | T | 111.2/63.4 |
| C214 | 4550007320 | S.TAN F930J226MAABMA | B | 117.7/65.5 |
| C215 | 4030011600 | S.CER C1608 JB 1E 104K-T | T | 119.9/66.5 |
| C216 | 4030017490 | S.CER C1608 JB 1A 105K-T | T | 112.9/66.5 |
| C301 | 4030007040 | S.CER C1608 CH 1H 180J-T | T | 18.8/70.5 |
| C302 | 4030006880 | S.CER C1608 JB 1H 472K-T | T | 23.8/71.2 |
| C303 | 4030006880 | S.CER C1608 JB 1H 472K-T | T | 20.0/63.5 |
| C304 | 4030006880 | S.CER C1608 JB 1H 472K-T | T | 23.0/63.5 |
| C401 | 4030008850 | S.CER C1608 JB 1H 123K-T | T | 11.1/86.7 |
| C403 | 4030018610 | S.CER C1608 CH 1H 182J-T | B | 15.6/87.5 |
| C404 | 4030018580 | S.CER C1608 CH 1H 821J-T | T | 21.0/89.3 |
| C405 | 4030007140 | S.CER C1608 CH 1H 121J-T | T | 21.0/88.0 |
| C406 | 4030017840 | S.CER C2012 CH 1H 222J-T | B | 22.7/86.8 |
| C407 | 4030017840 | S.CER C2012 CH 1H 222J-T | B | 22.7/88.8 |
| C408 | 4030007010 | S.CER C1608 CH 1H 100D-T | T | 21.7/90.6 |
| C409 | 4030007140 | S.CER C1608 CH 1H 121J-T | T | 21.7/91.9 |
| C410 | 4030011600 | S.CER C1608 JB 1E 104K-T | T | 17.8/92.1 |
| C411 | 4030011600 | S.CER C1608 JB 1E 104K-T | T | 13.5/85.2 |
| C420 | 4030011600 | S.CER C1608 JB 1E 104K-T | T | 8.5/89.3 |
| C421 | 4030006920 | S.CER C1608 CH 1H 010C-T | T | 11.1/89.3 |
| C422 | 4030006920 | S.CER C1608 CH 1H 010C-T | T | 31.6/87.3 |
| C423 | 4030011600 | S.CER C1608 JB 1E 104K-T | T | 29.1/92.1 |
| C424 | 4030011600 | S.CER C1608 JB 1E 104K-T | T | 24.8/85.2 |
| C425 | 4030011600 | S.CER C1608 JB 1E 104K-T | T | 40.2/95.5 |
| C426 | 4030006900 | S.CER C1608 JB 1H 103K-T | T | 47.5/89.7 |
| C427 | 4030011600 | S.CER C1608 JB 1E 104K-T | T | 36.0/81.0 |
| C428 | 4510008550 | S.ELE EEE1HA010SR | T | 38.1/92.2 |
| C429 | 4030011600 | S.CER C1608 JB 1E 104K-T | T | 47.5/85.5 |
| C431 | 4030006900 | S.CER C1608 JB 1H 103K-T | T | 38.6/77.2 |
| C432 | 4030011600 | S.CER C1608 JB 1E 104K-T | T | 41.5/73.9 |
| C433 | 4510008540 | S.ELE EEE1CA100SR | T | 31.5/73.3 |
| C434 | 4030011600 | S.CER C1608 JB 1E 104K-T | T | 40.5/88.6 |
| C501 | 4030011600 | S.CER C1608 JB 1E 104K-T | T | 52.6/73.0 |
| C502 | 4510008540 | S.ELE EEE1CA100SR | T | 52.2/68.6 |
| C503 | 4510008540 | S.ELE EEE1CA100SR | T | 59.3/70.6 |
| C504 | 4030011600 | S.CER C1608 JB 1E 104K-T | T | 62.0/78.7 |
| C505 | 4510008540 | S.ELE EEE1CA100SR | T | 59.6/64.6 |
| C506 | 4030011600 | S.CER C1608 JB 1E 104K-T | T | 61.6/81.8 |
| C507 | 4510008580 | S.ELE EEE0JA470SR | T | 51.0/87.4 |
| C508 | 4030017490 | S.CER C1608 JB 1A 105K-T | T | 49.3/82.9 |
| C509 | 4030011600 | S.CER C1608 JB 1E 104K-T | T | 59.7/87.9 |
| C521 | 4510009280 | S.ELE EEE1EA4R7SR | T | 59.7/93.9 |
| C522 | 4030011600 | S.CER C1608 JB 1E 104K-T | T | 55.5/92.2 |
| C523 | 4510008550 | S.ELE EEE1HA010SR | T | 51.2/94.0 |
| C524 | 4030011600 | S.CER C1608 JB 1E 104K-T | T | 55.3/97.0 |
| C551 | 4550007460 | S.TAN F930G107MBABMA | T | 99.1/64.3 |
| Eqv. | 4550006960 | S.TAN TEESVB2 0G 107M8R | | |
| C601 | 4030011600 | S.CER C1608 JB 1E 104K-T | B | 99.5/94.0 |
| C602 | 4030011600 | S.CER C1608 JB 1E 104K-T | B | 98.7/67.4 |
| C603 | 4030011600 | S.CER C1608 JB 1E 104K-T | B | 100.9/91.7 |
| C604 | 4030011600 | S.CER C1608 JB 1E 104K-T | B | 101.5/68.6 |
| C605 | 4030011600 | S.CER C1608 JB 1E 104K-T | B | 93.2/86.0 |
| C606 | 4030011600 | S.CER C1608 JB 1E 104K-T | B | 93.9/84.6 |
| C607 | 4030011600 | S.CER C1608 JB 1E 104K-T | B | 93.1/80.1 |
| C608 | 4030011600 | S.CER C1608 JB 1E 104K-T | B | 93.8/78.8 |
| C609 | 4030011600 | S.CER C1608 JB 1E 104K-T | B | 93.8/75.9 |
| C610 | 4030011600 | S.CER C1608 JB 1E 104K-T | B | 91.4/86.8 |
| C611 | 4030011600 | S.CER C1608 JB 1E 104K-T | B | 90.4/75.9 |
| C612 | 4030011600 | S.CER C1608 JB 1E 104K-T | B | 87.8/93.9 |
| C613 | 4030011600 | S.CER C1608 JB 1E 104K-T | B | 88.4/86.8 |
| C614 | 4030011600 | S.CER C1608 JB 1E 104K-T | B | 88.5/74.1 |
| C615 | 4030011600 | S.CER C1608 JB 1E 104K-T | B | 87.0/86.0 |
| C616 | 4030011600 | S.CER C1608 JB 1E 104K-T | B | 87.2/75.9 |
| C617 | 4030011600 | S.CER C1608 JB 1E 104K-T | T | 87.9/67.0 |
| C618 | 4030011600 | S.CER C1608 JB 1E 104K-T | B | 83.9/86.1 |
| C619 | 4030011600 | S.CER C1608 JB 1E 104K-T | B | 83.6/75.8 |
| C620 | 4030011600 | S.CER C1608 JB 1E 104K-T | B | 81.2/86.0 |
| C621 | 4030011600 | S.CER C1608 JB 1E 104K-T | B | 82.0/83.6 |
| C622 | 4030011600 | S.CER C1608 JB 1E 104K-T | B | 82.0/82.0 |
| C623 | 4030011600 | S.CER C1608 JB 1E 104K-T | B | 81.1/77.3 |
| C624 | 4030011600 | S.CER C1608 JB 1E 104K-T | B | 81.1/74.6 |
| C625 | 4030011600 | S.CER C1608 JB 1E 104K-T | B | 74.5/91.7 |
| C626 | 4030011600 | S.CER C1608 JB 1E 104K-T | B | 74.6/77.2 |
| C627 | 4030011600 | S.CER C1608 JB 1E 104K-T | B | 78.3/67.5 |
| C628 | 4030011600 | S.CER C1608 JB 1E 104K-T | B | 75.6/93.9 |
| C629 | 4030011600 | S.CER C1608 JB 1E 104K-T | B | 73.9/69.4 |
| C630 | 4030011600 | S.CER C1608 JB 1E 104K-T | T | 74.0/76.5 |
| C631 | 4030011600 | S.CER C1608 JB 1E 104K-T | T | 74.0/80.9 |
| C632 | 4030011600 | S.CER C1608 JB 1E 104K-T | T | 74.0/73.3 |
| C633 | 4030011600 | S.CER C1608 JB 1E 104K-T | T | 102.8/90.4 |
| C634 | 4030011600 | S.CER C1608 JB 1E 104K-T | T | 102.9/76.3 |
| C635 | 4030011600 | S.CER C1608 JB 1E 104K-T | B | 101.2/83.6 |
| C636 | 4030011600 | S.CER C1608 JB 1E 104K-T | B | 101.2/80.3 |
| C637 | 4030011600 | S.CER C1608 JB 1E 104K-T | B | 101.5/72.1 |
| C638 | 4030011600 | S.CER C1608 JB 1E 104K-T | B | 96.1/93.9 |
| C639 | 4030011600 | S.CER C1608 JB 1E 104K-T | T | 104.0/87.4 |
| C640 | 4030011600 | S.CER C1608 JB 1E 104K-T | B | 93.1/82.8 |
| C641 | 4030011600 | S.CER C1608 JB 1E 104K-T | B | 93.8/87.5 |
| C642 | 4030011600 | S.CER C1608 JB 1E 104K-T | B | 93.9/81.5 |
| C643 | 4030011600 | S.CER C1608 JB 1E 104K-T | B | 93.0/77.2 |
| C644 | 4030011600 | S.CER C1608 JB 1E 104K-T | B | 93.1/74.6 |
| C645 | 4030011600 | S.CER C1608 JB 1E 104K-T | B | 94.9/67.5 |
| C646 | 4030011600 | S.CER C1608 JB 1E 104K-T | B | 92.9/93.9 |
| C647 | 4030011600 | S.CER C1608 JB 1E 104K-T | T | 94.4/67.0 |
| C648 | 4030011600 | S.CER C1608 JB 1E 104K-T | B | 89.7/86.1 |
| C649 | 4030011600 | S.CER C1608 JB 1E 104K-T | B | 85.4/67.5 |
| C650 | 4030011600 | S.CER C1608 JB 1E 104K-T | B | 85.5/86.8 |
| C651 | 4030011600 | S.CER C1608 JB 1E 104K-T | B | 85.4/74.1 |
| C652 | 4030011600 | S.CER C1608 JB 1E 104K-T | B | 79.5/93.9 |

## [SCOPE UNIT]

| REF NO. | PARTS NO. | DESCRIPTION | M. | H/V LOCATION |
|---|---|---|---|---|
| C653 | 4030011600 | S.CER C1608 JB 1E 104K-T | B | 82.5/86.8 |
| C654 | 4030011600 | S.CER C1608 JB 1E 104K-T | T | 78.8/67.0 |
| C655 | 4030011600 | S.CER C1608 JB 1E 104K-T | B | 81.9/79.9 |
| C656 | 4030011600 | S.CER C1608 JB 1E 104K-T | B | 74.5/84.7 |
| C657 | 4030011600 | S.CER C1608 JB 1E 104K-T | B | 74.6/80.3 |
| C658 | 4030011600 | S.CER C1608 JB 1E 104K-T | B | 74.7/71.4 |
| C659 | 4030011600 | S.CER C1608 JB 1E 104K-T | B | 74.5/88.1 |
| C660 | 4510008540 | S.ELE EEE1CA100SR | T | 67.7/75.0 |
| C661 | 4030011600 | S.CER C1608 JB 1E 104K-T | B | 72.8/74.8 |
| C662 | 4030011600 | S.CER C1608 JB 1E 104K-T | T | 88.4/95.9 |
| C663 | 4030011600 | S.CER C1608 JB 1E 104K-T | T | 68.9/70.4 |
| C664 | 4030011600 | S.CER C1608 JB 1E 104K-T | T | 66.3/67.6 |
| C665 | 4030011600 | S.CER C1608 JB 1E 104K-T | B | 67.5/76.9 |
| C666 | 4550007310 | S.TAN F930J227MNMBMA | B | 108.6/74.0 |
| C667 | 4550007310 | S.TAN F930J227MNMBMA | B | 108.6/68.7 |
| C671 | 4030011600 | S.CER C1608 JB 1E 104K-T | T | 114.3/70.2 |
| C672 | 4030006880 | S.CER C1608 JB 1H 472K-T | T | 73.0/64.5 |
| C701 | 4030011600 | S.CER C1608 JB 1E 104K-T | T | 76.0/57.1 |
| C702 | 4030011600 | S.CER C1608 JB 1E 104K-T | T | 72.7/53.6 |
| C703 | 4030011600 | S.CER C1608 JB 1E 104K-T | T | 74.7/57.1 |
| C720 | 4030006880 | S.CER C1608 JB 1H 472K-T | T | 82.9/38.2 |
| C721 | 4030011600 | S.CER C1608 JB 1E 104K-T | T | 83.3/40.2 |
| C722 | 4510008540 | S.ELE EEE1CA100SR | T | 82.6/44.2 |
| C723 | 4030006880 | S.CER C1608 JB 1H 472K-T | T | 110.0/37.5 |
| C724 | 4030011600 | S.CER C1608 JB 1E 104K-T | T | 110.0/38.9 |
| C725 | 4510008540 | S.ELE EEE1CA100SR | T | 110.2/33.3 |
| C726 | 4030006880 | S.CER C1608 JB 1H 472K-T | T | 108.7/45.9 |
| C727 | 4030006880 | S.CER C1608 JB 1H 472K-T | T | 105.6/45.4 |
| C730 | 4030011600 | S.CER C1608 JB 1E 104K-T | T | 84.2/35.3 |
| C731 | 4030011600 | S.CER C1608 JB 1E 104K-T | T | 84.2/38.2 |
| C733 | 4030011600 | S.CER C1608 JB 1E 104K-T | T | 93.5/26.3 |
| C734 | 4030011600 | S.CER C1608 JB 1E 104K-T | T | 103.2/30.0 |
| C736 | 4030011600 | S.CER C1608 JB 1E 104K-T | T | 96.9/44.9 |
| C737 | 4030011600 | S.CER C1608 JB 1E 104K-T | T | 103.1/40.9 |
| C738 | 4030011600 | S.CER C1608 JB 1E 104K-T | T | 96.5/26.3 |
| C739 | 4030011600 | S.CER C1608 JB 1E 104K-T | T | 99.6/26.4 |
| C740 | 4030011600 | S.CER C1608 JB 1E 104K-T | T | 103.1/37.4 |
| C741 | 4030011600 | S.CER C1608 JB 1E 104K-T | T | 92.7/45.2 |
| C742 | 4030011600 | S.CER C1608 JB 1E 104K-T | T | 90.0/45.2 |
| C750 | 4030006900 | S.CER C1608 JB 1H 103K-T | T | 103.2/34.5 |
| C751 | 4030006900 | S.CER C1608 JB 1H 103K-T | T | 105.2/37.4 |
| C760 | 4030006880 | S.CER C1608 JB 1H 472K-T | T | 110.9/20.9 |
| C761 | 4030007150 | S.CER C1608 CH 1H 151J-T | T | 110.2/22.8 |
| C762 | 4030007110 | S.CER C1608 CH 1H 680J-T | T | 108.5/21.6 |
| C763 | 4030011280 | S.CER C1608 CH 1H 271J-T | T | 106.0/25.2 |
| C764 | 4030007080 | S.CER C1608 CH 1H 390J-T | T | 103.4/20.9 |
| C765 | 4030011830 | S.CER C1608 CH 1H 301J-T | T | 100.1/24.3 |
| C766 | 4030007020 | S.CER C1608 CH 1H 120J-T | T | 100.1/21.7 |
| C767 | 4030007170 | S.CER C1608 CH 1H 221J-T | T | 95.8/24.4 |
| C768 | 4030011280 | S.CER C1608 CH 1H 271J-T | T | 93.6/20.5 |
| C769 | 4030006860 | S.CER C1608 JB 1H 102K-T | T | 91.4/21.3 |
| C770 | 4030011280 | S.CER C1608 CH 1H 271J-T | T | 89.3/20.6 |
| C801 | 4030006880 | S.CER C1608 JB 1H 472K-T | T | 66.3/40.0 |
| C802 | 4510008540 | S.ELE EEE1CA100SR | T | 69.1/44.9 |
| C803 | 4030006900 | S.CER C1608 JB 1H 103K-T | T | 60.4/37.1 |
| C805 | 4550007660 | S.TAN F931E105MAABMA | T | 58.5/38.8 |
| Eqv. | 4550003220 | S.TAN TEESVA 1E 105M8R | | |
| C806 | 4340000240 | S.MYL ECHU 1C 682JX5 | T | 64.2/43.4 |
| C807 | 4030006880 | S.CER C1608 JB 1H 472K-T | T | 69.6/33.3 |
| C808 | 4030006880 | S.CER C1608 JB 1H 472K-T | B | 62.7/32.1 |
| C809 | 4510008540 | S.ELE EEE1CA100SR | T | 64.9/25.8 |
| C810 | 4030006880 | S.CER C1608 JB 1H 472K-T | T | 73.9/42.9 |
| C811 | 4030006880 | S.CER C1608 JB 1H 472K-T | T | 73.4/33.0 |
| C812 | 4030006880 | S.CER C1608 JB 1H 472K-T | T | 73.9/30.9 |
| C813 | 4030011600 | S.CER C1608 JB 1E 104K-T | T | 66.0/31.8 |
| C821 | 4030007060 | S.CER C1608 CH 1H 270J-T | T | 57.8/46.5 |
| C822 | 4030007100 | S.CER C1608 CH 1H 560J-T | T | 54.4/45.8 |
| C823 | 4030006960 | S.CER C1608 CH 1H 050C-T | T | 55.7/45.8 |
| C824 | 4610001850 | S.TRI TZB4R200AB10R00 (TZBX4R200BA110) | T | 50.7/44.8 |
| C825 | 4030007130 | S.CER C1608 CH 1H 101J-T | T | 47.0/46.8 |
| C826 | 4030007060 | S.CER C1608 CH 1H 270J-T | T | 40.9/46.0 |
| C827 | 4030007020 | S.CER C1608 CH 1H 120J-T | T | 45.5/44.7 |
| C828 | 4030006880 | S.CER C1608 JB 1H 472K-T | T | 43.5/43.1 |
| C829 | 4030009500 | S.CER C1608 CH 1H 0R5B-T | T | 38.0/42.9 |
| C830 | 4030006860 | S.CER C1608 JB 1H 102K-T | T | 48.0/52.8 |
| C831 | 4030006880 | S.CER C1608 JB 1H 472K-T | T | 46.4/52.8 |
| C832 | 4510008500 | S.ELE EEE1CA101WP | T | 49.4/57.7 |
| C833 | 4510008540 | S.ELE EEE1CA100SR | T | 40.3/58.0 |
| C842 | 4030006880 | S.CER C1608 JB 1H 472K-T | T | 39.5/35.1 |
| C843 | 4030006860 | S.CER C1608 JB 1H 102K-T | T | 23.9/34.4 |
| C844 | 4030006880 | S.CER C1608 JB 1H 472K-T | T | 24.6/32.4 |
| C845 | 4510008520 | S.ELE EEE1CA470SP | T | 17.7/35.4 |
| C846 | 4030006880 | S.CER C1608 JB 1H 472K-T | T | 38.5/31.3 |
| C847 | 4030006880 | S.CER C1608 JB 1H 472K-T | T | 30.4/36.2 |
| C848 | 4030006880 | S.CER C1608 JB 1H 472K-T | T | 30.4/38.3 |
| C849 | 4030006880 | S.CER C1608 JB 1H 472K-T | T | 27.0/40.1 |
| C850 | 4030006880 | S.CER C1608 JB 1H 472K-T | T | 30.4/39.7 |
| C851 | 4030006880 | S.CER C1608 JB 1H 472K-T | T | 25.2/42.3 |
| C852 | 4030007120 | S.CER C1608 CH 1H 820J-T | T | 30.1/44.3 |
| C853 | 4030007070 | S.CER C1608 CH 1H 330J-T | T | 24.4/46.9 |
| C854 | 4030007140 | S.CER C1608 CH 1H 121J-T | T | 30.1/45.9 |
| C855 | 4030007020 | S.CER C1608 CH 1H 120J-T | T | 30.1/48.2 |
| C856 | 4030007090 | S.CER C1608 CH 1H 470J-T | T | 30.2/50.4 |
| C862 | 4030006880 | S.CER C1608 JB 1H 472K-T | T | 60.4/34.5 |
| C911 | 4030008680 | S.CER C2012 JF 1C 105Z-T | T | 92.4/112.7 |
| C912 | 4030008680 | S.CER C2012 JF 1C 105Z-T | T | 92.4/109.1 |
| C913 | 4030008680 | S.CER C2012 JF 1C 105Z-T | T | 92.4/105.5 |
| C914 | 4030008680 | S.CER C2012 JF 1C 105Z-T | T | 96.9/115.3 |
| C915 | 4030008680 | S.CER C2012 JF 1C 105Z-T | T | 101.5/114.1 |
| C916 | 4030011600 | S.CER C1608 JB 1E 104K-T | T | 108.8/116.5 |
| C917 | 4030011600 | S.CER C1608 JB 1E 104K-T | B | 108.3/115.9 |
| C918 | 4030011600 | S.CER C1608 JB 1E 104K-T | B | 91.4/112.7 |

Eqv.= This component is equivalent to the REF No. component listed above, and may be substituted on parts orders and repairs.

M.=Mounted side (T: Mounted on the Top side, B: Mounted on the Bottom side)
S.=Surface mount

## [SCOPE UNIT]

| REF NO. | PARTS NO. | DESCRIPTION | | M. | H/V LOCATION |
|---|---|---|---|---|---|
| J1 | 6510028210 | CON | SJ050010 (TMP-J01X-V6) | | |
| J2 | 6510028210 | CON | SJ050010 (TMP-J01X-V6) | | |
| J3 | 6510028210 | CON | SJ050010 (TMP-J01X-V6) | | |
| J4 | 6510020001 | S.CON | 52808-3071(3090) | T | 128.0/41.5 |
| J11 | 6510028210 | CON | SJ050010 (TMP-J01X-V6) | | |
| J901 | 6510023720 | CON | LGY6501-0600C | | |
| J902 | 6510023120 | CON | CD6109SA1J0 <CVI> | | |
| J903 | 6510024040 | CON | TM11R-5M2-88-LP | | |
| J904 | 6510024033 | CON | UBA-4R-D14T-4D(LF)(SN) | | |
| J905 | 6450001941 | CON | KEY-15S-2A3A(LF)(SN) | | |
| J906 | 6510019971 | S.CON | 52808-1071 | T | 129.1/97.7 |
| J907 | 6510020251 | S.CON | B9B-PH-SM4-TB(LF)(SN) | T | 50.8/105.3 |
| J908 | 6510022311 | S.CON | B5B-PH-SM4-TB(LF)(SN) | T | 88.8/110.1 |
| J909 | 6510003471 | CON | B11B-EH-S(LF)(SN) | | |
| J910 | 6510019421 | S.CON | B8B-ZR-SM4-TF(LF)(SN) | T | 109.7/104.7 |
| DS901 | 5040002930 | S.LED | SML-512MW T86 | T | 57.2/115.2 |
| DS902 | 5040002930 | S.LED | SML-512MW T86 | T | 46.1/115.2 |
| EP901 | 6910012350 | S.BEA | MMZ1608Y 102BT | B | 131.1/119.7 |
| EP902 | 6910012350 | S.BEA | MMZ1608Y 102BT | B | 122.5/122.7 |
| EP903 | 6910012350 | S.BEA | MMZ1608Y 102BT | T | 81.4/114.1 |
| EP904 | 6910012350 | S.BEA | MMZ1608Y 102BT | T | 82.7/114.1 |
| EP905 | 6910012350 | S.BEA | MMZ1608Y 102BT | B | 79.7/113.7 |
| EP906 | 6910012350 | S.BEA | MMZ1608Y 102BT | T | 82.0/110.2 |
| EP907 | 6910012350 | S.BEA | MMZ1608Y 102BT | B | 83.8/111.5 |
| EP908 | 6910012350 | S.BEA | MMZ1608Y 102BT | B | 85.1/111.5 |

## [LOGIC UNIT]

| REF NO. | PARTS NO. | DESCRIPTION | | M. | H/V LOCATION |
|---|---|---|---|---|---|
| IC1 | 1130014630 | S.IC | MT48LC16M16A2P-75 IT:D <FE> | B | 59.3/91.9 |
| IC2 | 1130014630 | S.IC | MT48LC16M16A2P-75 IT:D <FE> | T | 59.3/99.0 |
| IC51 | 1130011591 | S.IC | IDT70V24L15PFG | B | 95.5/56.0 |
| IC52 | 1140009781 | S.IC | XC9572XL-10TQG100C | B | 116.5/56.0 |
| IC53 | 1110005822 | S.IC | R3112N281A-TR-FE | T | 142.3/100.9 |
| IC54 | 1130007431 | S.IC | TC7S14FU(TE85RF) | T | 146.6/100.7 |
| IC55 | 1130008041 | S.IC | TC7SH04FU(TE85LJF) | T | 98.0/34.5 |
| IC56 | 1130010111 | S.IC | TC7WH04FU(TE12LF) | B | 35.1/25.1 |
| IC101 | 1130011010 | S.IC | SN74CBTLV3257PWR <ACE> | T | 25.2/75.4 |
| IC102 | 1130006441 | S.IC | TC7S08F(TE85RF) | T | 62.0/39.1 |
| IC103 | 1140011561 | S.IC | HD6417751RBP200V | T | 53.5/64.9 |
| IC104 | 1130008361 | S.IC | TC7SHU04FU(TE85LJF) | T | 8.1/60.8 |
| IC105 | 1130012241 | S.IC | CY2292FXC (SX-2590J) | T | 12.6/69.0 |
| IC106 | 1130011110 | S.IC | TC74VCX04FT(EL) | T | 10.0/77.1 |
| IC201 | 1130014630 | S.IC | MT48LC16M16A2P-75 IT:D <FE> | B | 128.1/77.4 |
| IC202 | 1130014630 | S.IC | MT48LC16M16A2P-75 IT:D <FE> | B | 128.1/95.5 |
| IC203 | 1140011571 | S.IC | HD64404BTDV | T | 97.4/78.4 |
| IC204 | 1140011581 | S.IC | ADV7123KSTZ50 <FE> | T | 207.1/29.6 |
| IC205 | 1130011941 | S.IC | TC7SZ04F(TE85LF) | T | 195.9/26.4 |
| IC206 | 1130012150 | S.IC | SN74ACT04PWR | T | 196.1/20.0 |
| IC207 | 1130005721 | S.IC | TC7W04F(TE12LF) | B | 212.2/38.2 |
| IC208 | 1130014080 | S.IC | BD6517F-E2 | B | 219.1/39.3 |
| IC209 | 1190001920 | S.IC | AK5355-VT-E2 | B | 109.8/23.0 |
| IC210 | 1190001920 | S.IC | AK5355-VT-E2 | B | 120.7/23.0 |
| IC211 | 1190001910 | S.IC | AK4384-VT-E2 | B | 131.4/32.6 |
| IC212 | 1190001910 | S.IC | AK4384-VT-E2 | B | 119.2/33.5 |
| IC401 | 1130010970 | S.IC | PCI1410APGE | B | 23.5/48.6 |
| IC402 | 1130011960 | S.IC | TPS2211AIDBR | B | 21.8/31.2 |
| IC403 | 1130009570 | S.IC | BR93LC46F-WE2 | T | 24.3/67.4 |
| IC404 | 1130010990 | S.IC | RTL8139C<GMI> | B | 23.0/76.5 |
| IC601 | 1130008041 | S.IC | TC7SH04FU(TE85LJF) | B | 169.3/55.8 |
| IC602 | 1130008711 | S.IC | TC7SET04FU(T5LJF) | B | 169.3/53.3 |
| IC603 | 1110004770 | S.IC | BU9480F-E2 | T | 176.0/57.1 |
| IC604 | 1140011590 | S.IC | HD64F2377VFQ33V (EMPTY) | B | 87.0/30.5 |
| IC605 | 1140009781 | S.IC | XC9572XL-10TQG100C | B | 141.0/57.0 |
| IC607 | 1130006441 | S.IC | TC7S08F(TE85RF) | B | 59.7/22.7 |
| IC608 | 1130006441 | S.IC | TC7S08F(TE85RF) | B | 63.4/22.7 |
| IC609 | 1130005252 | S.IC | TC74HC08AF(ELF) | B | 60.0/29.9 |
| IC610 | 1130016260 | S.IC | BR24T64FVT-WE2 | B | 54.1/37.4 |
| IC801 | 1180002020 | S.REG | BA033FP-E2 | B | 144.3/112.5 |
| IC802 | 1180001541 | S.IC | TA78L08F(TE12LF) | T | 131.1/111.7 |
| IC821 | 1110002700 | S.IC | NJM2904M-TE1-#FMZB | B | 17.0/105.0 |
| IC851 | 1110003870 | S.IC | NJM2058M-TE1-#ZZZB | B | 186.4/56.1 |
| IC852 | 1110003870 | S.IC | NJM2058M-TE1-#ZZZB | B | 135.5/12.6 |
| IC853 | 1110003870 | S.IC | NJM2058M-TE1-#ZZZB | B | 114.6/10.1 |
| IC854 | 1130005721 | S.IC | TC7W04F(TE12LF) | B | 161.4/40.6 |
| Q601 | 1530002060 | S.TRA | 2SC4081 T106 R | B | 173.3/53.3 |
| Q602 | 1510000510 | S.TRA | 2SA1576A T106R | B | 173.2/57.2 |
| Q802 | 1530002060 | S.TRA | 2SC4081 T106 R | T | 159.2/70.3 |
| Q803 | 1530004210 | S.TRA | DSC7004S0L | B | 160.2/70.9 |
| Q804 | 1530004210 | S.TRA | DSC7004S0L | B | 166.8/70.8 |
| Q805 | 1530002060 | S.TRA | 2SC4081 T106 R | T | 165.8/70.3 |
| Q806 | 1530004210 | S.TRA | DSC7004S0L | B | 173.4/70.8 |
| Q807 | 1530002060 | S.TRA | 2SC4081 T106 R | T | 172.4/70.3 |
| Q808 | 1590001330 | S.TRA | DTA114EUA T106 | B | 157.8/30.2 |
| Q809 | 1590001330 | S.TRA | DTA114EUA T106 | B | 157.8/27.6 |
| Q810 | 1540000550 | S.TRA | 2SD1664 T100Q | T | 160.2/78.1 |
| Q821 | 1520000651 | S.TRA | 2SB1201S-TL-E | B | 29.0/108.5 |
| Q822 | 1530002060 | S.TRA | 2SC4081 T106 R | B | 25.6/103.6 |
| Q901 | 1590001960 | S.TRA | XP4311(TX) | B | 187.9/88.3 |
| Q902 | 1590001960 | S.TRA | XP4311(TX) | B | 188.9/79.7 |
| Q903 | 1590001960 | S.TRA | XP4311(TX) | B | 193.9/88.3 |
| Q904 | 1590001960 | S.TRA | XP4311(TX) | B | 192.9/79.7 |
| D51 | 1750000550 | S.DIO | 1SS355 TE-17 | T | 126.1/48.8 |
| D52 | 1750000550 | S.DIO | 1SS355 TE-17 [UK] only | T | 126.1/50.6 |
| D53 | 1750000550 | S.DIO | 1SS355 TE-17 | T | 126.1/52.4 |
| D54 | 1750000550 | S.DIO | 1SS355 TE-17 | T | 126.1/54.2 |
| D55 | 1750000550 | S.DIO | 1SS355 TE-17 [EUR] | T | 124.7/56.0 |
| | 1750000550 | S.DIO | 1SS355 TE-17 [UK] | | |
| D56 | 1750000550 | S.DIO | 1SS355 TE-17 [UK] only | T | 124.7/57.8 |
| D57 | 1750000550 | S.DIO | 1SS355 TE-17 | T | 124.7/59.6 |
| D58 | 1750000550 | S.DIO | 1SS355 TE-17 | T | 124.7/61.4 |
| D59 | 1750000550 | S.DIO | 1SS355 TE-17 [EUR] | T | 124.7/63.2 |
| | 1750000550 | S.DIO | 1SS355 TE-17 [UK] | | |
| D60 | 1750000550 | S.DIO | 1SS355 TE-17 | T | 130.2/48.8 |
| D61 | 1750000550 | S.DIO | 1SS355 TE-17 | T | 130.2/50.6 |
| D62 | 1750000550 | S.DIO | 1SS355 TE-17 | T | 130.1/52.4 |
| D65 | 1750000550 | S.DIO | 1SS355 TE-17 | B | 162.1/53.7 |
| D66 | 1750000550 | S.DIO | 1SS355 TE-17 [EUR] | B | 180.9/47.7 |
| | 1750000550 | S.DIO | 1SS355 TE-17 [UK] | | |
| D67 | 1750000550 | S.DIO | 1SS355 TE-17 | B | 114.3/57.2 |
| D68 | 1750000550 | S.DIO | 1SS355 TE-17 | T | 85.8/64.1 |
| D202 | 1790000981 | S.DIO | MA3J7420GL | B | 214.6/29.4 |
| D203 | 1790000981 | S.DIO | MA3J7420GL | B | 214.6/26.4 |
| D204 | 1790000981 | S.DIO | MA3J7420GL | T | 201.5/16.9 |
| D205 | 1790000981 | S.DIO | MA3J7420GL | T | 201.5/19.8 |
| D206 | 1790000981 | S.DIO | MA3J7420GL | B | 218.0/7.4 |
| D207 | 1790000981 | S.DIO | MA3J7420GL | B | 220.9/7.4 |
| D208 | 1790000981 | S.DIO | MA3J7420GL | B | 228.0/7.4 |
| D209 | 1790000981 | S.DIO | MA3J7420GL | B | 230.9/7.4 |
| D601 | 1750000550 | S.DIO | 1SS355 TE-17 | B | 175.6/52.5 |
| D801 | 1750000370 | S.DIO | DA221 TL | B | 159.2/66.6 |
| D802 | 1750000370 | S.DIO | DA221 TL | B | 165.8/66.6 |
| D803 | 1750000370 | S.DIO | DA221 TL | B | 172.4/66.6 |
| D804 | 1750000271 | S.DIO | 1SS301(TE85LF) | B | 170.1/64.2 |
| D805 | 1790001611 | S.DIO | 1SS385(TE85LF) | B | 157.3/38.2 |
| D806 | 1790001611 | S.DIO | 1SS385(TE85LF) | B | 157.3/40.3 |
| D821 | 1730002341 | S.ZEN | MAZ8047GML | B | 22.5/104.6 |
| D851 | 1750000550 | S.DIO | 1SS355 TE-17 | B | 180.9/50.2 |
| D852 | 1750000550 | S.DIO | 1SS355 TE-17 | B | 191.8/50.1 |
| D853 | 1790000981 | S.DIO | MA3J7420GL | B | 122.0/18.6 |

Eqv.= This component is equivalent to the REF No. component listed above, and may be substituted on parts orders and repairs.

M.=Mounted side (T: Mounted on the Top side, B: Mounted on the Bottom side)
S.=Surface mount

## [LOGIC UNIT]

| REF NO. | PARTS NO. | DESCRIPTION | | M. | H/V LOCATION |
|---|---|---|---|---|---|
| D854 | 1790000981 | S.DIO | MA3J7420GL | B | 119.5/18.6 |
| D855 | 1790000981 | S.DIO | MA3J7420GL | B | 107.0/18.5 |
| D856 | 1790000981 | S.DIO | MA3J7420GL | B | 104.5/18.5 |
| D857 | 1750000550 | S.DIO | 1SS355 TE-17 | B | 190.0/61.9 |
| D858 | 1750000550 | S.DIO | 1SS355 TE-17 | B | 182.2/61.9 |
| D860 | 1790000981 | S.DIO | MA3J7420GL | T | 97.6/26.4 |
| D861 | 1790000981 | S.DIO | MA3J7420GL | T | 97.6/31.4 |
| D862 | 1790000981 | S.DIO | MA3J7420GL | T | 97.9/23.8 |
| D863 | 1790000981 | S.DIO | MA3J7420GL | T | 97.6/28.9 |
| D864 | 1790000981 | S.DIO | MA3J7420GL | T | 100.4/23.8 |
| D865 | 1790000981 | S.DIO | MA3J7420GL | T | 94.4/24.8 |
| D866 | 1790000981 | S.DIO | MA3J7420GL | T | 94.4/27.3 |
| D867 | 1790000981 | S.DIO | MA3J7420GL | T | 102.9/23.8 |
| D901 | 1790000981 | S.DIO | MA3J7420GL | T | 188.1/31.2 |
| X101 | 6050011610 | S.XTA | CR-751 SMD-49 25.000 MHz <KDS> | T | 2.9/63.1 |
| X201 | 6050013240 | S.XTA | CR-920 SD3 24.576 MHz | T | 103.9/94.6 |
| X202 | 6050011910 | S.XTA | CR-780 DSX530G 48 MHz <KDS> | T | 100.2/60.6 |
| X601 | 6050011810 | S.XTA | CR-755 SMD-49 15.9744 MHz <KDS> | T | 81.9/13.6 |
| L203 | 6200002631 | S.COI | NLV25T-R10J | T | 115.2/85.6 |
| L204 | 6200002631 | S.COI | NLV25T-R10J | T | 127.0/91.7 |
| L205 | 6200002631 | S.COI | NLV25T-R10J | T | 61.2/36.7 |
| L803 | 6180003321 | S.COI | SLF6028T-150M1R0-PF | B | 88.7/112.9 |
| L804 | 6180003321 | S.COI | SLF6028T-150M1R0-PF | B | 102.5/112.9 |
| L805 | 6180003321 | S.COI | SLF6028T-150M1R0-PF | B | 95.8/112.9 |
| L806 | 6180003321 | S.COI | SLF6028T-150M1R0-PF | B | 109.0/112.9 |
| L807 | 6180003321 | S.COI | SLF6028T-150M1R0-PF | B | 115.8/112.9 |
| L808 | 6200003590 | S.COI | EXCCL3225U1 | T | 92.1/115.8 |
| L809 | 6200003590 | S.COI | EXCCL3225U1 | B | 93.1/123.2 |
| L810 | 6200003590 | S.COI | EXCCL3225U1 | B | 87.7/123.3 |
| L811 | 6200001831 | S.COI | NLV32T-100J | B | 127.9/22.6 |
| L821 | 6200003590 | S.COI | EXCCL3225U1 | B | 121.2/112.7 |
| L822 | 6200003590 | S.COI | EXCCL3225U1 | T | 125.1/115.9 |
| L823 | 6200009790 | S.COI | BLM31PG121SN1 | T | 18.2/25.6 |
| L824 | 6200003590 | S.COI | EXCCL3225U1 | B | 130.1/115.5 |
| L825 | 6200003590 | S.COI | EXCCL3225U1 | B | 133.6/116.2 |
| L826 | 6180003321 | S.COI | SLF6028T-150M1R0-PF | B | 180.0/15.5 |
| L827 | 6200003590 | S.COI | EXCCL3225U1 | T | 120.4/115.9 |
| L832 | 6200003590 | S.COI | EXCCL3225U1 | B | 80.2/122.2 |
| L833 | 6200003590 | S.COI | EXCCL3225U1 | B | 75.7/122.2 |
| L834 | 6200003590 | S.COI | EXCCL3225U1 | B | 125.7/112.2 |
| L835 | 6200003590 | S.COI | EXCCL3225U1 | B | 125.7/115.3 |
| L901 | 6200003590 | S.COI | EXCCL3225U1 | B | 214.5/74.5 |
| L902 | 6200003590 | S.COI | EXCCL3225U1 | B | 214.5/78.2 |
| L903 | 6200003590 | S.COI | EXCCL3225U1 | B | 206.6/80.0 |
| L904 | 6200003590 | S.COI | EXCCL3225U1 | B | 214.5/81.2 |
| L905 | 6200003590 | S.COI | EXCCL3225U1 | B | 21.0/114.8 |
| L906 | 6200003590 | S.COI | EXCCL3225U1 | B | 24.0/114.8 |
| L907 | 6200003590 | S.COI | EXCCL3225U1 | B | 27.0/114.8 |
| L908 | 6200003590 | S.COI | EXCCL3225U1 | B | 30.0/114.8 |
| L909 | 6200003261 | S.COI | NLV32T-101J | B | 181.4/82.6 |
| L910 | 6200003590 | S.COI | EXCCL3225U1 | B | 195.7/82.4 |
| L911 | 6200003590 | S.COI | EXCCL3225U1 | B | 221.9/76.6 |
| L912 | 6200003590 | S.COI | EXCCL3225U1 | B | 230.4/76.9 |
| L913 | 6200003590 | S.COI | EXCCL3225U1 | B | 230.4/63.0 |
| L914 | 6200003590 | S.COI | EXCCL3225U1 | B | 221.8/64.0 |
| L915 | 6200003590 | S.COI | EXCCL3225U1 | B | 230.4/66.0 |
| L916 | 6200003590 | S.COI | EXCCL3225U1 | B | 221.8/67.0 |
| L917 | 6200003590 | S.COI | EXCCL3225U1 | T | 162.3/21.7 |
| L918 | 6200003590 | S.COI | EXCCL3225U1 | T | 186.4/18.7 |
| L919 | 6200003590 | S.COI | EXCCL3225U1 | T | 186.4/22.4 |
| L920 | 6200003590 | S.COI | EXCCL3225U1 | T | 162.3/24.7 |
| L1101 | 6200003590 | S.COI | EXCCL3225U1 | T | 40.5/25.8 |
| R1 | 7030003520 | S.RES | ERJ3GEYJ 472 V (4.7K) | T | 91.6/101.4 |
| R51 | 7030003520 | S.RES | ERJ3GEYJ 472 V (4.7K) | T | 143.1/76.8 |
| R52 | 7030003560 | S.RES | ERJ3GEYJ 103 V (10K) | T | 138.7/100.7 |
| R55 | 7030003440 | S.RES | ERJ3GEYJ 102 V (1K) | B | 126.4/51.5 |
| R56 | 7030003440 | S.RES | ERJ3GEYJ 102 V (1K) | B | 123.5/46.1 |
| R57 | 7030003680 | S.RES | ERJ3GEYJ 104 V (100K) | B | 31.4/25.1 |
| R58 | 7030003680 | S.RES | ERJ3GEYJ 104 V (100K) | B | 30.1/25.1 |
| R101 | 7030003680 | S.RES | ERJ3GEYJ 104 V (100K) | T | 19.4/74.9 |
| R102 | 7030003520 | S.RES | ERJ3GEYJ 472 V (4.7K) | T | 31.1/73.8 |
| R103 | 7030003520 | S.RES | ERJ3GEYJ 472 V (4.7K) | T | 31.1/75.7 |
| R104 | 7030003520 | S.RES | ERJ3GEYJ 472 V (4.7K) | T | 19.4/73.6 |
| R105 | 7030003520 | S.RES | ERJ3GEYJ 472 V (4.7K) | T | 19.4/76.2 |
| R106 | 7030003560 | S.RES | ERJ3GEYJ 103 V (10K) | B | 54.7/60.1 |
| R107 | 7030003560 | S.RES | ERJ3GEYJ 103 V (10K) | B | 49.5/60.1 |
| R108 | 7030003560 | S.RES | ERJ3GEYJ 103 V (10K) | B | 48.5/49.6 |
| R109 | 7030003560 | S.RES | ERJ3GEYJ 103 V (10K) | B | 52.1/60.1 |
| R110 | 7030003560 | S.RES | ERJ3GEYJ 103 V (10K) | T | 54.9/49.4 |
| R111 | 7030003560 | S.RES | ERJ3GEYJ 103 V (10K) | B | 54.7/58.8 |
| R112 | 7030003560 | S.RES | ERJ3GEYJ 103 V (10K) | T | 53.6/49.4 |
| R113 | 7030003560 | S.RES | ERJ3GEYJ 103 V (10K) | B | 49.5/58.8 |
| R114 | 7030003560 | S.RES | ERJ3GEYJ 103 V (10K) | B | 45.9/49.6 |
| R115 | 7030003560 | S.RES | ERJ3GEYJ 103 V (10K) | B | 49.5/62.7 |
| R116 | 7030003560 | S.RES | ERJ3GEYJ 103 V (10K) | B | 49.5/61.4 |
| R117 | 7030003260 | S.RES | ERJ3GEYJ 330 V (33) | B | 43.3/49.5 |
| R118 | 7030003560 | S.RES | ERJ3GEYJ 103 V (10K) | B | 49.5/64.0 |
| R119 | 7030003560 | S.RES | ERJ3GEYJ 103 V (10K) | B | 41.4/50.1 |
| R120 | 7030003560 | S.RES | ERJ3GEYJ 103 V (10K) | B | 49.5/65.3 |
| R121 | 7030003560 | S.RES | ERJ3GEYJ 103 V (10K) | B | 43.3/46.9 |
| R122 | 7030003560 | S.RES | ERJ3GEYJ 103 V (10K) | B | 39.3/56.1 |
| R123 | 7030003560 | S.RES | ERJ3GEYJ 103 V (10K) | B | 43.3/45.6 |
| R124 | 7030003680 | S.RES | ERJ3GEYJ 104 V (100K) | T | 51.0/49.4 |
| R125 | 7030003520 | S.RES | ERJ3GEYJ 472 V (4.7K) | T | 52.3/49.4 |
| R126 | 7030003560 | S.RES | ERJ3GEYJ 103 V (10K) | B | 52.1/61.4 |
| R127 | 7030003560 | S.RES | ERJ3GEYJ 103 V (10K) | B | 52.1/58.8 |

## [LOGIC UNIT]

| REF NO. | PARTS NO. | DESCRIPTION | | M. | H/V LOCATION |
|---|---|---|---|---|---|
| R128 | 7030003560 | S.RES | ERJ3GEYJ 103 V (10K) | T | 53.6/45.8 |
| R129 | 7030003560 | S.RES | ERJ3GEYJ 103 V (10K) | T | 54.9/46.8 |
| R130 | 7030003560 | S.RES | ERJ3GEYJ 103 V (10K) | B | 56.4/50.5 |
| R131 | 7030003560 | S.RES | ERJ3GEYJ 103 V (10K) | B | 54.7/61.4 |
| R132 | 7030003560 | S.RES | ERJ3GEYJ 103 V (10K) | T | 56.2/49.4 |
| R133 | 7030003560 | S.RES | ERJ3GEYJ 103 V (10K) | T | 56.2/46.8 |
| R134 | 7030003200 | S.RES | ERJ3GEYJ 100 V (10) | B | 57.3/58.9 |
| R135 | 7030003200 | S.RES | ERJ3GEYJ 100 V (10) | B | 57.3/60.2 |
| R136 | 7030003200 | S.RES | ERJ3GEYJ 100 V (10) | B | 70.1/50.5 |
| R137 | 7030004050 | S.RES | ERJ3GEYJ 1R0 V (1) | B | 49.5/68.0 |
| R138 | 7030003560 | S.RES | ERJ3GEYJ 103 V (10K) | B | 49.5/69.4 |
| R139 | 7030003560 | S.RES | ERJ3GEYJ 103 V (10K) | B | 49.8/78.1 |
| R140 | 7410000990 | S.ARR | EXB-V8V 470JV (47) | T | 47.0/82.7 |
| R141 | 7410000990 | S.ARR | EXB-V8V 470JV (47) | T | 43.3/82.7 |
| R142 | 7410000990 | S.ARR | EXB-V8V 470JV (47) | T | 54.4/82.7 |
| R143 | 7410000990 | S.ARR | EXB-V8V 470JV (47) | T | 61.8/82.7 |
| R144 | 7410000990 | S.ARR | EXB-V8V 470JV (47) | T | 50.7/82.7 |
| R145 | 7410000990 | S.ARR | EXB-V8V 470JV (47) | T | 58.1/82.7 |
| R146 | 7030003280 | S.RES | ERJ3GEYJ 470 V (47) | T | 70.0/81.8 |
| R147 | 7030003280 | S.RES | ERJ3GEYJ 470 V (47) | T | 70.0/80.5 |
| R148 | 7410000990 | S.ARR | EXB-V8V 470JV (47) | T | 65.5/82.7 |
| R149 | 7410000990 | S.ARR | EXB-V8V 470JV (47) | T | 70.0/54.9 |
| R150 | 7410000990 | S.ARR | EXB-V8V 470JV (47) | T | 70.0/58.6 |
| R151 | 7410000990 | S.ARR | EXB-V8V 470JV (47) | T | 70.0/62.3 |
| R152 | 7410000990 | S.ARR | EXB-V8V 470JV (47) | T | 70.0/66.0 |
| R153 | 7030003200 | S.RES | ERJ3GEYJ 100 V (10) | T | 70.0/83.1 |
| R154 | 7410000990 | S.ARR | EXB-V8V 470JV (47) | T | 70.0/69.7 |
| R155 | 7410000990 | S.ARR | EXB-V8V 470JV (47) | T | 70.0/73.4 |
| R156 | 7410000990 | S.ARR | EXB-V8V 470JV (47) | T | 70.0/78.0 |
| R157 | 7410000800 | S.ARR | EXB-V8V 103JV (10K) | T | 77.5/38.8 |
| R158 | 7030003560 | S.RES | ERJ3GEYJ 103 V (10K) | T | 77.4/36.3 |
| R159 | 7030003560 | S.RES | ERJ3GEYJ 103 V (10K) | T | 64.3/41.4 |
| R161 | 7030003250 | S.RES | ERJ3GEYJ 270 V (27) | T | 9.1/64.6 |
| R162 | 7030003800 | S.RES | ERJ3GEYJ 105 V (1M) | T | 6.2/59.6 |
| R163 | 7030003320 | S.RES | ERJ3GEYJ 101 V (100) | T | 12.6/73.7 |
| R164 | 7030003250 | S.RES | ERJ3GEYJ 270 V (27) | B | 10.8/68.3 |
| R165 | 7030003860 | S.RES | ERJ3GE JPW V | T | 4.4/76.8 |
| R166 | 7030003860 | S.RES | ERJ3GE JPW V | T | 8.5/81.3 |
| R167 | 7030003860 | S.RES | ERJ3GE JPW V | T | 14.9/78.1 |
| R170 | 7030003600 | S.RES | ERJ3GEYJ 223 V (22K) | B | 38.6/38.7 |
| R171 | 7030003600 | S.RES | ERJ3GEYJ 223 V (22K) | B | 35.4/75.3 |
| R172 | 7030003600 | S.RES | ERJ3GEYJ 223 V (22K) | B | 35.4/76.6 |
| R173 | 7030003600 | S.RES | ERJ3GEYJ 223 V (22K) | B | 39.5/78.3 |
| R174 | 7030003600 | S.RES | ERJ3GEYJ 223 V (22K) | B | 37.4/79.0 |
| R175 | 7030003600 | S.RES | ERJ3GEYJ 223 V (22K) | B | 37.4/80.3 |
| R176 | 7030003600 | S.RES | ERJ3GEYJ 223 V (22K) | B | 35.4/74.0 |
| R201 | 7030003560 | S.RES | ERJ3GEYJ 103 V (10K) | T | 114.5/85.1 |
| R202 | 7030003560 | S.RES | ERJ3GEYJ 103 V (10K) | T | 111.3/85.1 |
| R203 | 7030003560 | S.RES | ERJ3GEYJ 103 V (10K) | T | 118.4/86.4 |
| R204 | 7030003560 | S.RES | ERJ3GEYJ 103 V (10K) | T | 118.4/85.1 |
| R205 | 7030003560 | S.RES | ERJ3GEYJ 103 V (10K) | T | 114.5/82.5 |
| R206 | 7030003560 | S.RES | ERJ3GEYJ 103 V (10K) | T | 111.3/83.8 |
| R207 | 7030003560 | S.RES | ERJ3GEYJ 103 V (10K) | T | 118.4/83.8 |
| R208 | 7030003560 | S.RES | ERJ3GEYJ 103 V (10K) | T | 118.4/82.5 |
| R209 | 7030003560 | S.RES | ERJ3GEYJ 103 V (10K) | T | 114.5/83.8 |
| R212 | 7030003640 | S.RES | ERJ3GEYJ 473 V (47K) | T | 83.8/82.0 |
| R213 | 7030003640 | S.RES | ERJ3GEYJ 473 V (47K) | T | 83.8/83.3 |
| R218 | 7030003520 | S.RES | ERJ3GEYJ 472 V (4.7K) | T | 117.0/49.0 |
| R219 | 7030003520 | S.RES | ERJ3GEYJ 472 V (4.7K) | T | 83.8/79.4 |
| R220 | 7030003520 | S.RES | ERJ3GEYJ 472 V (4.7K) | B | 94.2/74.5 |
| R221 | 7030003560 | S.RES | ERJ3GEYJ 103 V (10K) | T | 83.8/73.8 |
| R225 | 7030003560 | S.RES | ERJ3GEYJ 103 V (10K) | B | 94.2/79.7 |
| R226 | 7030003560 | S.RES | ERJ3GEYJ 103 V (10K) | B | 94.2/81.0 |
| R227 | 7030003560 | S.RES | ERJ3GEYJ 103 V (10K) | T | 92.0/98.2 |
| R228 | 7030003560 | S.RES | ERJ3GEYJ 103 V (10K) | T | 92.0/95.2 |
| R229 | 7030003560 | S.RES | ERJ3GEYJ 103 V (10K) | T | 91.2/92.1 |
| R230 | 7030003560 | S.RES | ERJ3GEYJ 103 V (10K) | T | 93.3/95.2 |
| R231 | 7030003560 | S.RES | ERJ3GEYJ 103 V (10K) | T | 92.5/92.3 |
| R232 | 7030003560 | S.RES | ERJ3GEYJ 103 V (10K) | B | 93.4/83.3 |
| R233 | 7030003560 | S.RES | ERJ3GEYJ 103 V (10K) | T | 93.3/98.2 |
| R234 | 7030003560 | S.RES | ERJ3GEYJ 103 V (10K) | T | 93.8/92.2 |
| R235 | 7030003560 | S.RES | ERJ3GEYJ 103 V (10K) | T | 94.6/95.2 |
| R236 | 7030003560 | S.RES | ERJ3GEYJ 103 V (10K) | T | 94.6/98.2 |
| R237 | 7030003560 | S.RES | ERJ3GEYJ 103 V (10K) | B | 94.7/83.3 |
| R238 | 7030003560 | S.RES | ERJ3GEYJ 103 V (10K) | T | 95.1/92.3 |
| R239 | 7030003560 | S.RES | ERJ3GEYJ 103 V (10K) | T | 95.9/95.2 |
| R240 | 7030003560 | S.RES | ERJ3GEYJ 103 V (10K) | T | 95.9/98.2 |
| R241 | 7030003560 | S.RES | ERJ3GEYJ 103 V (10K) | B | 97.0/89.4 |
| R242 | 7030003560 | S.RES | ERJ3GEYJ 103 V (10K) | T | 96.6/92.1 |
| R243 | 7030003560 | S.RES | ERJ3GEYJ 103 V (10K) | B | 96.0/83.3 |
| R244 | 7030003560 | S.RES | ERJ3GEYJ 103 V (10K) | T | 96.7/64.8 |
| R245 | 7030003560 | S.RES | ERJ3GEYJ 103 V (10K) | T | 90.2/64.8 |
| R246 | 7030003560 | S.RES | ERJ3GEYJ 103 V (10K) | T | 88.9/61.7 |
| R247 | 7030003560 | S.RES | ERJ3GEYJ 103 V (10K) | B | 96.8/74.5 |
| R248 | 7030003560 | S.RES | ERJ3GEYJ 103 V (10K) | T | 91.5/64.8 |
| R249 | 7030003560 | S.RES | ERJ3GEYJ 103 V (10K) | T | 86.3/64.8 |
| R250 | 7030003560 | S.RES | ERJ3GEYJ 103 V (10K) | T | 87.6/64.8 |
| R251 | 7030003560 | S.RES | ERJ3GEYJ 103 V (10K) | T | 90.2/61.7 |
| R252 | 7030003560 | S.RES | ERJ3GEYJ 103 V (10K) | T | 87.6/61.7 |
| R253 | 7030003560 | S.RES | ERJ3GEYJ 103 V (10K) | T | 83.8/75.1 |
| R254 | 7030003560 | S.RES | ERJ3GEYJ 103 V (10K) | T | 88.9/64.8 |
| R255 | 7030003560 | S.RES | ERJ3GEYJ 103 V (10K) | T | 86.3/61.7 |
| R256 | 7030003560 | S.RES | ERJ3GEYJ 103 V (10K) | B | 96.8/77.1 |
| R257 | 7030003560 | S.RES | ERJ3GEYJ 103 V (10K) | T | 92.8/64.8 |
| R258 | 7030003560 | S.RES | ERJ3GEYJ 103 V (10K) | B | 96.8/78.4 |
| R259 | 7030003560 | S.RES | ERJ3GEYJ 103 V (10K) | T | 92.8/61.7 |
| R260 | 7030003560 | S.RES | ERJ3GEYJ 103 V (10K) | B | 96.8/79.7 |
| R261 | 7030003560 | S.RES | ERJ3GEYJ 103 V (10K) | T | 94.1/61.7 |
| R262 | 7030003560 | S.RES | ERJ3GEYJ 103 V (10K) | B | 96.8/81.0 |
| R263 | 7030003560 | S.RES | ERJ3GEYJ 103 V (10K) | B | 94.0/66.6 |
| R264 | 7030003560 | S.RES | ERJ3GEYJ 103 V (10K) | B | 98.0/72.6 |
| R265 | 7030003560 | S.RES | ERJ3GEYJ 103 V (10K) | T | 92.8/59.1 |
| R266 | 7030003560 | S.RES | ERJ3GEYJ 103 V (10K) | T | 94.1/59.1 |
| R267 | 7030003560 | S.RES | ERJ3GEYJ 103 V (10K) | T | 95.4/64.8 |
| R268 | 7030003560 | S.RES | ERJ3GEYJ 103 V (10K) | B | 91.4/66.6 |

Eqv.= This component is equivalent to the REF No. component listed above, and may be substituted on parts orders and repairs.

M.=Mounted side (T: Mounted on the Top side, B: Mounted on the Bottom side)
S.=Surface mount

## [LOGIC UNIT]

| REF NO. | PARTS NO. | DESCRIPTION | M. | H/V LOCATION |
|---|---|---|---|---|
| R269 | 7030003560 | S.RES ERJ3GEYJ 103 V (10K) | T | 94.1/64.8 |
| R270 | 7030003560 | S.RES ERJ3GEYJ 103 V (10K) | T | 91.5/61.7 |
| R271 | 7030003560 | S.RES ERJ3GEYJ 103 V (10K) | T | 91.5/59.1 |
| R272 | 7030003560 | S.RES ERJ3GEYJ 103 V (10K) | B | 114.8/71.1 |
| R273 | 7030003560 | S.RES ERJ3GEYJ 103 V (10K) | T | 114.0/68.2 |
| R274 | 7030003560 | S.RES ERJ3GEYJ 103 V (10K) | B | 99.9/79.7 |
| R275 | 7030003560 | S.RES ERJ3GEYJ 103 V (10K) | T | 111.1/69.5 |
| R276 | 7030003560 | S.RES ERJ3GEYJ 103 V (10K) | T | 108.7/64.9 |
| R277 | 7030003560 | S.RES ERJ3GEYJ 103 V (10K) | T | 114.0/66.9 |
| R278 | 7030003560 | S.RES ERJ3GEYJ 103 V (10K) | T | 114.0/65.6 |
| R279 | 7030003560 | S.RES ERJ3GEYJ 103 V (10K) | B | 99.9/81.0 |
| R280 | 7030003560 | S.RES ERJ3GEYJ 103 V (10K) | T | 114.0/69.5 |
| R281 | 7030003560 | S.RES ERJ3GEYJ 103 V (10K) | B | 100.7/75.2 |
| R282 | 7030003560 | S.RES ERJ3GEYJ 103 V (10K) | B | 99.4/75.2 |
| R283 | 7030003560 | S.RES ERJ3GEYJ 103 V (10K) | B | 105.6/65.3 |
| R284 | 7030003560 | S.RES ERJ3GEYJ 103 V (10K) | B | 105.6/66.6 |
| R285 | 7030003560 | S.RES ERJ3GEYJ 103 V (10K) | B | 99.9/78.4 |
| R286 | 7030003560 | S.RES ERJ3GEYJ 103 V (10K) | T | 114.0/64.3 |
| R287 | 7030003560 | S.RES ERJ3GEYJ 103 V (10K) | T | 103.5/65.6 |
| R288 | 7030003560 | S.RES ERJ3GEYJ 103 V (10K) | T | 108.7/63.4 |
| R289 | 7030003560 | S.RES ERJ3GEYJ 103 V (10K) | T | 100.9/65.5 |
| R290 | 7030003560 | S.RES ERJ3GEYJ 103 V (10K) | B | 99.9/77.1 |
| R291 | 7030003560 | S.RES ERJ3GEYJ 103 V (10K) | T | 106.1/65.5 |
| R292 | 7030003560 | S.RES ERJ3GEYJ 103 V (10K) | B | 94.2/75.8 |
| R293 | 7030003560 | S.RES ERJ3GEYJ 103 V (10K) | B | 94.2/77.1 |
| R294 | 7030003560 | S.RES ERJ3GEYJ 103 V (10K) | B | 94.2/78.4 |
| R295 | 7030003640 | S.RES ERJ3GEYJ 473 V (47K) | B | 96.8/75.8 |
| R296 | 7030003560 | S.RES ERJ3GEYJ 103 V (10K) | T | 111.3/87.7 |
| R297 | 7030003560 | S.RES ERJ3GEYJ 103 V (10K) | T | 111.3/91.6 |
| R298 | 7030003560 | S.RES ERJ3GEYJ 103 V (10K) | T | 118.4/91.6 |
| R299 | 7030003560 | S.RES ERJ3GEYJ 103 V (10K) | T | 111.3/90.3 |
| R300 | 7030003560 | S.RES ERJ3GEYJ 103 V (10K) | T | 114.5/90.3 |
| R301 | 7030003560 | S.RES ERJ3GEYJ 103 V (10K) | T | 118.4/90.3 |
| R302 | 7030003560 | S.RES ERJ3GEYJ 103 V (10K) | T | 114.5/91.6 |
| R303 | 7030003560 | S.RES ERJ3GEYJ 103 V (10K) | T | 118.4/89.0 |
| R304 | 7030003560 | S.RES ERJ3GEYJ 103 V (10K) | T | 114.5/89.0 |
| R305 | 7030003560 | S.RES ERJ3GEYJ 103 V (10K) | T | 111.3/89.0 |
| R306 | 7030003560 | S.RES ERJ3GEYJ 103 V (10K) | T | 111.3/86.4 |
| R307 | 7030003560 | S.RES ERJ3GEYJ 103 V (10K) | T | 114.5/86.4 |
| R308 | 7030003560 | S.RES ERJ3GEYJ 103 V (10K) | T | 118.4/87.7 |
| R309 | 7030003560 | S.RES ERJ3GEYJ 103 V (10K) | T | 114.5/87.7 |
| R310 | 7030003560 | S.RES ERJ3GEYJ 103 V (10K) | T | 111.1/68.2 |
| R311 | 7030003560 | S.RES ERJ3GEYJ 103 V (10K) | B | 116.1/71.1 |
| R313 | 7030003410 | S.RES ERJ3GEYJ 561 V (560) | T | 209.9/36.8 |
| R314 | 7030003340 | S.RES ERJ3GEYJ 151 V (150) | B | 216.8/32.6 |
| R315 | 7030003340 | S.RES ERJ3GEYJ 151 V (150) | B | 218.1/32.6 |
| R316 | 7030003340 | S.RES ERJ3GEYJ 151 V (150) | B | 216.8/29.6 |
| R317 | 7030003340 | S.RES ERJ3GEYJ 151 V (150) | B | 218.1/29.6 |
| R318 | 7030003340 | S.RES ERJ3GEYJ 151 V (150) | B | 216.8/26.6 |
| R319 | 7030003340 | S.RES ERJ3GEYJ 151 V (150) | B | 218.1/26.6 |
| R320 | 7030003240 | S.RES ERJ3GEYJ 220 V (22) | T | 204.0/17.8 |
| R321 | 7030003240 | S.RES ERJ3GEYJ 220 V (22) | T | 204.0/20.7 |
| R322 | 7030003250 | S.RES ERJ3GEYJ 270 V (27) | B | 214.0/7.4 |
| R323 | 7030003250 | S.RES ERJ3GEYJ 270 V (27) | B | 216.0/3.3 |
| R324 | 7030003580 | S.RES ERJ3GEYJ 153 V (15K) | B | 214.0/6.1 |
| R325 | 7030003580 | S.RES ERJ3GEYJ 153 V (15K) | B | 216.0/4.6 |
| R326 | 7030003250 | S.RES ERJ3GEYJ 270 V (27) | B | 227.4/5.0 |
| R327 | 7030003250 | S.RES ERJ3GEYJ 270 V (27) | B | 230.0/5.0 |
| R328 | 7030003580 | S.RES ERJ3GEYJ 153 V (15K) | B | 228.2/3.1 |
| R329 | 7030003580 | S.RES ERJ3GEYJ 153 V (15K) | B | 230.8/3.1 |
| R330 | 7030003560 | S.RES ERJ3GEYJ 103 V (10K) | B | 222.6/38.9 |
| R331 | 7030003560 | S.RES ERJ3GEYJ 103 V (10K) | B | 223.9/38.9 |
| R332 | 7030003640 | S.RES ERJ3GEYJ 473 V (47K) | B | 104.7/25.9 |
| R333 | 7030003640 | S.RES ERJ3GEYJ 473 V (47K) | B | 114.0/19.2 |
| R334 | 7030003640 | S.RES ERJ3GEYJ 473 V (47K) | B | 110.8/19.5 |
| R335 | 7030003280 | S.RES ERJ3GEYJ 470 V (47) | B | 109.9/26.4 |
| R336 | 7030003640 | S.RES ERJ3GEYJ 473 V (47K) | B | 115.6/25.9 |
| R337 | 7030003640 | S.RES ERJ3GEYJ 473 V (47K) | B | 125.1/23.7 |
| R338 | 7030003640 | S.RES ERJ3GEYJ 473 V (47K) | B | 125.2/20.7 |
| R339 | 7030003280 | S.RES ERJ3GEYJ 470 V (47) | B | 120.2/27.7 |
| R340 | 7030003280 | S.RES ERJ3GEYJ 470 V (47) | B | 130.8/38.2 |
| R341 | 7030003640 | S.RES ERJ3GEYJ 473 V (47K) | B | 135.8/33.5 |
| R342 | 7030003280 | S.RES ERJ3GEYJ 470 V (47) | B | 121.7/36.9 |
| R343 | 7030003640 | S.RES ERJ3GEYJ 473 V (47K) | B | 119.6/30.0 |
| R344 | 7030003520 | S.RES ERJ3GEYJ 472 V (4.7K) | B | 129.2/29.2 |
| R345 | 7030003520 | S.RES ERJ3GEYJ 472 V (4.7K) | B | 117.0/30.0 |
| R350 | 7030003860 | S.RES ERJ3GE JPW V | T | 119.6/49.0 |
| R351 | 7030003860 | S.RES ERJ3GE JPW V | B | 100.7/83.3 |
| R353 | 7030003860 | S.RES ERJ3GE JPW V | B | 187.5/12.3 |
| R355 | 7030003860 | S.RES ERJ3GE JPW V | B | 187.5/13.6 |
| R356 | 7030003860 | S.RES ERJ3GE JPW V | B | 185.4/10.0 |
| R361 | 7030003320 | S.RES ERJ3GEYJ 101 V (100) | T | 193.5/25.7 |
| R401 | 7030003320 | S.RES ERJ3GEYJ 101 V (100) | B | 39.9/44.9 |
| R403 | 7030003560 | S.RES ERJ3GEYJ 103 V (10K) | B | 16.5/35.7 |
| R404 | 7030003560 | S.RES ERJ3GEYJ 103 V (10K) | B | 22.9/35.7 |
| R405 | 7030003560 | S.RES ERJ3GEYJ 103 V (10K) | B | 7.9/40.9 |
| R406 | 7030003560 | S.RES ERJ3GEYJ 103 V (10K) | T | 24.4/46.5 |
| R407 | 7030003560 | S.RES ERJ3GEYJ 103 V (10K) | T | 22.5/47.2 |
| R408 | 7030003560 | S.RES ERJ3GEYJ 103 V (10K) | T | 28.1/51.9 |
| R409 | 7030003560 | S.RES ERJ3GEYJ 103 V (10K) | T | 22.9/57.1 |
| R410 | 7030003560 | S.RES ERJ3GEYJ 103 V (10K) | T | 20.3/57.1 |
| R411 | 7030003560 | S.RES ERJ3GEYJ 103 V (10K) | T | 24.2/57.1 |
| R412 | 7030003560 | S.RES ERJ3GEYJ 103 V (10K) | T | 25.5/57.1 |
| R413 | 7030003560 | S.RES ERJ3GEYJ 103 V (10K) | T | 26.8/57.1 |
| R414 | 7030003560 | S.RES ERJ3GEYJ 103 V (10K) | T | 21.6/57.1 |
| R415 | 7030003560 | S.RES ERJ3GEYJ 103 V (10K) | B | 25.6/26.3 |
| R416 | 7030003560 | S.RES ERJ3GEYJ 103 V (10K) | B | 24.3/26.3 |
| R417 | 7030003560 | S.RES ERJ3GEYJ 103 V (10K) | B | 23.0/26.3 |
| R418 | 7030003320 | S.RES ERJ3GEYJ 101 V (100) | B | 36.1/82.6 |
| R419 | 7030003440 | S.RES ERJ3GEYJ 102 V (1K) | B | 10.5/83.4 |
| R420 | 7030003580 | S.RES ERJ3GEYJ 153 V (15K) | B | 11.0/81.5 |
| R421 | 7030003470 | S.RES ERJ3GEYJ 182 V (1.8K) | B | 12.3/76.4 |
| R422 | 7030003250 | S.RES ERJ3GEYJ 270 V (27) | B | 11.6/74.3 |
| R423 | 7030003560 | S.RES ERJ3GEYJ 103 V (10K) | B | 14.6/90.2 |
| R424 | 7030003560 | S.RES ERJ3GEYJ 103 V (10K) | B | 11.6/85.8 |

## [LOGIC UNIT]

| REF NO. | PARTS NO. | DESCRIPTION | M. | H/V LOCATION |
|---|---|---|---|---|
| R425 | 7030003380 | S.RES ERJ3GEYJ 331 V (330) | T | 9.3/96.5 |
| R426 | 7030003380 | S.RES ERJ3GEYJ 331 V (330) | T | 9.3/94.9 |
| R427 | 7030003380 | S.RES ERJ3GEYJ 331 V (330) | T | 9.3/93.2 |
| R428 | 7030003320 | S.RES ERJ3GEYJ 101 V (100) | B | 147.5/21.3 |
| R429 | 7030003320 | S.RES ERJ3GEYJ 101 V (100) | B | 148.8/21.3 |
| R430 | 7030003320 | S.RES ERJ3GEYJ 101 V (100) | B | 151.4/21.3 |
| R431 | 7030003320 | S.RES ERJ3GEYJ 101 V (100) | B | 150.1/21.3 |
| R432 | 7030003320 | S.RES ERJ3GEYJ 101 V (100) | B | 154.3/15.2 |
| R433 | 7030003320 | S.RES ERJ3GEYJ 101 V (100) | B | 155.6/15.2 |
| R434 | 7030003320 | S.RES ERJ3GEYJ 101 V (100) | B | 155.6/18.4 |
| R435 | 7030003320 | S.RES ERJ3GEYJ 101 V (100) | B | 154.3/18.4 |
| R436 | 7030003340 | S.RES ERJ3GEYJ 151 V (150) | B | 156.5/6.7 |
| R437 | 7030003340 | S.RES ERJ3GEYJ 151 V (150) | B | 158.5/6.7 |
| R438 | 7030003340 | S.RES ERJ3GEYJ 151 V (150) | B | 162.5/6.7 |
| R439 | 7030003340 | S.RES ERJ3GEYJ 151 V (150) | B | 164.5/6.7 |
| R440 | 7030003340 | S.RES ERJ3GEYJ 151 V (150) | B | 156.5/4.1 |
| R441 | 7030003340 | S.RES ERJ3GEYJ 151 V (150) | B | 158.5/4.1 |
| R442 | 7030003340 | S.RES ERJ3GEYJ 151 V (150) | B | 164.5/4.1 |
| R443 | 7030003340 | S.RES ERJ3GEYJ 151 V (150) | B | 162.5/4.1 |
| R450 | 7030003860 | S.RES ERJ3GE JPW V | T | 36.8/35.5 |
| R601 | 7030003620 | S.RES ERJ3GEYJ 333 V (33K) | B | 175.0/55.5 |
| R602 | 7030003590 | S.RES ERJ3GEYJ 183 V (18K) | B | 171.3/53.2 |
| R603 | 7030003540 | S.RES ERJ3GEYJ 682 V (6.8K) | B | 173.2/55.2 |
| R604 | 7030003640 | S.RES ERJ3GEYJ 473 V (47K) | B | 171.3/55.8 |
| R605 | 7030003680 | S.RES ERJ3GEYJ 104 V (100K) | B | 167.3/55.1 |
| R606 | 7030003680 | S.RES ERJ3GEYJ 104 V (100K) | B | 102.8/31.7 |
| R607 | 7030003350 | S.RES ERJ3GEYJ 181 V (180) | B | 87.8/14.3 |
| R608 | 7030003520 | S.RES ERJ3GEYJ 472 V (4.7K) | B | 90.6/14.3 |
| R609 | 7030003440 | S.RES ERJ3GEYJ 102 V (1K) | T | 80.8/23.6 |
| R610 | 7030003440 | S.RES ERJ3GEYJ 102 V (1K) | T | 80.8/24.9 |
| R611 | 7030003440 | S.RES ERJ3GEYJ 102 V (1K) | T | 80.9/26.2 |
| R612 | 7030003440 | S.RES ERJ3GEYJ 102 V (1K) | T | 80.1/27.5 |
| R613 | 7030003440 | S.RES ERJ3GEYJ 102 V (1K) | T | 83.4/27.9 |
| R614 | 7030003440 | S.RES ERJ3GEYJ 102 V (1K) | T | 83.4/29.2 |
| R615 | 7030003440 | S.RES ERJ3GEYJ 102 V (1K) | T | 83.4/30.6 |
| R616 | 7030003440 | S.RES ERJ3GEYJ 102 V (1K) | T | 83.4/31.9 |
| R617 | 7030003800 | S.RES ERJ3GEYJ 105 V (1M) | T | 86.5/31.8 |
| R618 | 7030003800 | S.RES ERJ3GEYJ 105 V (1M) | T | 86.5/30.5 |
| R619 | 7030003800 | S.RES ERJ3GEYJ 105 V (1M) | T | 86.5/29.2 |
| R620 | 7030003800 | S.RES ERJ3GEYJ 105 V (1M) | T | 86.5/27.9 |
| R621 | 7030003800 | S.RES ERJ3GEYJ 105 V (1M) | T | 84.2/26.6 |
| R622 | 7030003800 | S.RES ERJ3GEYJ 105 V (1M) | T | 84.2/25.3 |
| R623 | 7030003800 | S.RES ERJ3GEYJ 105 V (1M) | T | 84.4/23.6 |
| R624 | 7030003800 | S.RES ERJ3GEYJ 105 V (1M) | T | 84.4/22.3 |
| R625 | 7030003640 | S.RES ERJ3GEYJ 473 V (47K) | B | 68.7/27.3 |
| R626 | 7030003600 | S.RES ERJ3GEYJ 223 V (22K) | B | 68.7/28.6 |
| R627 | 7030003640 | S.RES ERJ3GEYJ 473 V (47K) | B | 66.4/36.4 |
| R628 | 7030003640 | S.RES ERJ3GEYJ 473 V (47K) | B | 66.4/35.1 |
| R629 | 7030003640 | S.RES ERJ3GEYJ 473 V (47K) | B | 71.3/35.0 |
| R630 | 7030003520 | S.RES ERJ3GEYJ 472 V (4.7K) | B | 68.7/32.5 |
| R631 | 7030003520 | S.RES ERJ3GEYJ 472 V (4.7K) | T | 67.4/27.1 |
| R632 | 7030003520 | S.RES ERJ3GEYJ 472 V (4.7K) | T | 67.4/31.0 |
| R633 | 7030003520 | S.RES ERJ3GEYJ 472 V (4.7K) | T | 67.4/28.4 |
| R634 | 7030003520 | S.RES ERJ3GEYJ 472 V (4.7K) | B | 66.4/33.8 |
| R635 | 7030003520 | S.RES ERJ3GEYJ 472 V (4.7K) | T | 67.4/29.7 |
| R636 | 7030003640 | S.RES ERJ3GEYJ 473 V (47K) | B | 58.2/19.6 |
| R637 | 7030003640 | S.RES ERJ3GEYJ 473 V (47K) | B | 61.9/19.6 |
| R639 | 7030003640 | S.RES ERJ3GEYJ 473 V (47K) | T | 99.1/19.0 |
| R640 | 7030003640 | S.RES ERJ3GEYJ 473 V (47K) | T | 97.8/19.0 |
| R641 | 7030003640 | S.RES ERJ3GEYJ 473 V (47K) | T | 96.5/19.0 |
| R642 | 7030003640 | S.RES ERJ3GEYJ 473 V (47K) | T | 95.2/19.0 |
| R643 | 7030003600 | S.RES ERJ3GEYJ 223 V (22K) | B | 81.0/46.3 |
| R644 | 7030003560 | S.RES ERJ3GEYJ 103 V (10K) | B | 82.3/46.3 |
| R645 | 7030003520 | S.RES ERJ3GEYJ 472 V (4.7K) | T | 93.2/41.0 |
| R646 | 7030003720 | S.RES ERJ3GEYJ 224 V (220K) | B | 101.8/41.6 |
| R647 | 7030003720 | S.RES ERJ3GEYJ 224 V (220K) | B | 102.8/44.2 |
| R648 | 7030003720 | S.RES ERJ3GEYJ 224 V (220K) | B | 103.8/41.6 |
| R649 | 7030003720 | S.RES ERJ3GEYJ 224 V (220K) | B | 104.8/44.2 |
| R650 | 7030003720 | S.RES ERJ3GEYJ 224 V (220K) | B | 105.8/41.6 |
| R651 | 7030003720 | S.RES ERJ3GEYJ 224 V (220K) | B | 106.8/44.2 |
| R652 | 7030003720 | S.RES ERJ3GEYJ 224 V (220K) | B | 107.8/41.6 |
| R653 | 7030003720 | S.RES ERJ3GEYJ 224 V (220K) | B | 108.8/44.2 |
| R654 | 7030003520 | S.RES ERJ3GEYJ 472 V (4.7K) | B | 102.8/39.3 |
| R655 | 7030003520 | S.RES ERJ3GEYJ 472 V (4.7K) | B | 102.8/37.8 |
| R656 | 7030003520 | S.RES ERJ3GEYJ 472 V (4.7K) | T | 144.4/60.0 |
| R657 | 7030003720 | S.RES ERJ3GEYJ 224 V (220K) | B | 68.7/26.0 |
| R658 | 7030003640 | S.RES ERJ3GEYJ 473 V (47K) | B | 84.3/44.2 |
| R659 | 7030003640 | S.RES ERJ3GEYJ 473 V (47K) | B | 84.3/45.5 |
| R660 | 7030003640 | S.RES ERJ3GEYJ 473 V (47K) | B | 102.8/29.6 |
| R661 | 7030003640 | S.RES ERJ3GEYJ 473 V (47K) | B | 69.4/16.5 |
| R662 | 7030003640 | S.RES ERJ3GEYJ 473 V (47K) | B | 89.3/14.3 |
| R663 | 7030003640 | S.RES ERJ3GEYJ 473 V (47K) | B | 71.3/15.9 |
| R664 | 7030003640 | S.RES ERJ3GEYJ 473 V (47K) | B | 71.3/17.2 |
| R665 | 7030003560 | S.RES ERJ3GEYJ 103 V (10K) | B | 93.2/14.3 |
| R666 | 7030003560 | S.RES ERJ3GEYJ 103 V (10K) | B | 78.4/16.5 |
| R667 | 7030003560 | S.RES ERJ3GEYJ 103 V (10K) | B | 77.1/16.0 |
| R668 | 7030003640 | S.RES ERJ3GEYJ 473 V (47K) | B | 85.0/16.9 |
| R669 | 7030003640 | S.RES ERJ3GEYJ 473 V (47K) | B | 71.3/14.6 |
| R670 | 7030003640 | S.RES ERJ3GEYJ 473 V (47K) | T | 94.5/43.6 |
| R671 | 7030003640 | S.RES ERJ3GEYJ 473 V (47K) | T | 95.8/43.6 |
| R672 | 7030003640 | S.RES ERJ3GEYJ 473 V (47K) | B | 75.8/16.9 |
| R673 | 7030003640 | S.RES ERJ3GEYJ 473 V (47K) | B | 74.4/16.9 |
| R674 | 7030003640 | S.RES ERJ3GEYJ 473 V (47K) | T | 91.3/36.9 |
| R675 | 7030003640 | S.RES ERJ3GEYJ 473 V (47K) | T | 89.1/31.8 |
| R676 | 7030003640 | S.RES ERJ3GEYJ 473 V (47K) | B | 94.5/14.3 |
| R677 | 7030003520 | S.RES ERJ3GEYJ 472 V (4.7K) | T | 146.2/65.2 |
| R678 | 7030003720 | S.RES ERJ3GEYJ 224 V (220K) | B | 68.7/22.1 |
| R679 | 7030003640 | S.RES ERJ3GEYJ 473 V (47K) | B | 91.9/14.3 |
| R680 | 7030003520 | S.RES ERJ3GEYJ 472 V (4.7K) | T | 144.7/65.2 |
| R681 | 7030003520 | S.RES ERJ3GEYJ 472 V (4.7K) | T | 147.6/65.1 |
| R682 | 7030003520 | S.RES ERJ3GEYJ 472 V (4.7K) | B | 152.8/60.9 |
| R683 | 7030003720 | S.RES ERJ3GEYJ 224 V (220K) | B | 68.7/23.4 |
| R684 | 7030003640 | S.RES ERJ3GEYJ 473 V (47K) | B | 80.3/16.2 |
| R685 | 7030003520 | S.RES ERJ3GEYJ 472 V (4.7K) | B | 152.8/62.2 |
| R686 | 7030003520 | S.RES ERJ3GEYJ 472 V (4.7K) | B | 152.8/59.6 |

Eqv.= This component is equivalent to the REF No. component listed above, and may be substituted on parts orders and repairs.

M.=Mounted side (T: Mounted on the Top side, B: Mounted on the Bottom side)
S.=Surface mount

## [LOGIC UNIT]

| REF NO. | PARTS NO. | DESCRIPTION | M. | H/V LOCATION |
|---|---|---|---|---|
| R687 | 7030003520 | S.RES ERJ3GEYJ 472 V (4.7K) | B | 152.1/53.6 |
| R688 | 7030003720 | S.RES ERJ3GEYJ 224 V (220K) | B | 68.7/24.7 |
| R689 | 7030003520 | S.RES ERJ3GEYJ 472 V (4.7K) | B | 153.0/56.2 |
| R690 | 7030003520 | S.RES ERJ3GEYJ 472 V (4.7K) | B | 153.0/54.9 |
| R691 | 7030003640 | S.RES ERJ3GEYJ 473 V (47K) | B | 66.1/32.0 |
| R701 | 7030003860 | S.RES ERJ3GE JPW V | T | 93.2/43.6 |
| R801 | 7030003560 | S.RES ERJ3GEYJ 103 V (10K) | T | 158.3/72.8 |
| R802 | 7030006210 | S.RES ERJ12YJ4R7U (4.7) | T | 162.4/71.2 |
| R803 | 7030003440 | S.RES ERJ3GEYJ 102 V (1K) | T | 159.6/72.8 |
| R804 | 7030006210 | S.RES ERJ12YJ4R7U (4.7) | T | 169.0/71.2 |
| R805 | 7030003440 | S.RES ERJ3GEYJ 102 V (1K) | T | 166.2/72.8 |
| R806 | 7030003560 | S.RES ERJ3GEYJ 103 V (10K) | T | 164.9/72.8 |
| R807 | 7030006210 | S.RES ERJ12YJ4R7U (4.7) | T | 175.6/71.2 |
| R808 | 7030003440 | S.RES ERJ3GEYJ 102 V (1K) | T | 173.0/72.8 |
| R809 | 7030003560 | S.RES ERJ3GEYJ 103 V (10K) | T | 171.7/72.8 |
| R810 | 7030003320 | S.RES ERJ3GEYJ 101 V (100) | B | 155.0/29.9 |
| R811 | 7030003320 | S.RES ERJ3GEYJ 101 V (100) | B | 155.0/27.6 |
| R812 | 7030010440 | S.RES ERJ1TYJ 680U (68) | B | 133.0/111.3 |
| R813 | 7030003560 | S.RES ERJ3GEYJ 103 V (10K) | B | 192.7/10.1 |
| R814 | 7030003440 | S.RES ERJ3GEYJ 102 V (1K) | T | 105.6/116.7 |
| R816 | 7030003560 | S.RES ERJ3GEYJ 103 V (10K) | T | 159.0/74.7 |
| R817 | 7030003560 | S.RES ERJ3GEYJ 103 V (10K) | T | 161.6/74.7 |
| R818 | 7030000140 | S.RES MCR10EZHJ 10 (100) | T | 155.6/78.3 |
| R819 | 7030007190 | S.RES ERJ12YJ220U (22) | T | 135.5/111.1 |
| R821 | 7030003370 | S.RES ERJ3GEYJ 271 V (270) | B | 15.4/100.0 |
| R822 | 7030009720 | S.RES ERJ12YJ102U (1K) | T | 20.0/103.2 |
| R823 | 7030003810 | S.RES ERJ3GEYJ 125 V (1.2M) | B | 16.9/109.5 |
| R824 | 7030003810 | S.RES ERJ3GEYJ 125 V (1.2M) | B | 13.5/107.2 |
| R825 | 7030008170 | S.RES ERJ12YJ1R0U (1) | B | 37.1/112.2 |
| R826 | 7030003610 | S.RES ERJ3GEYJ 273 V (27K) | B | 16.9/110.8 |
| R827 | 7030003610 | S.RES ERJ3GEYJ 273 V (27K) | B | 13.5/110.0 |
| R828 | 7030003560 | S.RES ERJ3GEYJ 103 V (10K) | B | 25.4/101.6 |
| R829 | 7030000340 | S.RES MCR10EZHJ 470 (471) | B | 20.7/104.6 |
| R830 | 7030003600 | S.RES ERJ3GEYJ 223 V (22K) | B | 18.6/100.0 |
| R832 | 7030003600 | S.RES ERJ3GEYJ 223 V (22K) | B | 18.6/98.7 |
| R833 | 7030003560 | S.RES ERJ3GEYJ 103 V (10K) | B | 18.6/97.4 |
| R850 | 7030003860 | S.RES ERJ3GE JPW V | B | 182.5/50.2 |
| R851 | 7030003680 | S.RES ERJ3GEYJ 104 V (100K) | B | 187.1/62.0 |
| R852 | 7030003680 | S.RES ERJ3GEYJ 104 V (100K) | B | 185.1/62.0 |
| R853 | 7030003770 | S.RES ERJ3GEYJ 564 V (560K) | B | 183.8/62.0 |
| R854 | 7030003770 | S.RES ERJ3GEYJ 564 V (560K) | B | 188.4/62.0 |
| R855 | 7030003520 | S.RES ERJ3GEYJ 472 V (4.7K) | B | 191.5/62.0 |
| R856 | 7030003520 | S.RES ERJ3GEYJ 472 V (4.7K) | B | 180.7/61.9 |
| R857 | 7030003560 | S.RES ERJ3GEYJ 103 V (10K) | B | 144.8/14.2 |
| R858 | 7030003460 | S.RES ERJ3GEYJ 152 V (1.5K) | B | 144.8/12.9 |
| R859 | 7030003470 | S.RES ERJ3GEYJ 182 V (1.8K) | B | 142.2/12.9 |
| R860 | 7030003500 | S.RES ERJ3GEYJ 332 V (3.3K) | B | 144.8/15.5 |
| R861 | 7030003480 | S.RES ERJ3GEYJ 222 V (2.2K) | B | 141.4/15.0 |
| R862 | 7030003380 | S.RES ERJ3GEYJ 331 V (330) | B | 147.7/3.8 |
| R863 | 7030003560 | S.RES ERJ3GEYJ 103 V (10K) | B | 134.6/21.1 |
| R864 | 7030003460 | S.RES ERJ3GEYJ 152 V (1.5K) | B | 134.6/19.8 |
| R865 | 7030003470 | S.RES ERJ3GEYJ 182 V (1.8K) | B | 134.6/18.5 |
| R866 | 7030003500 | S.RES ERJ3GEYJ 332 V (3.3K) | B | 131.8/17.2 |
| R867 | 7030003480 | S.RES ERJ3GEYJ 222 V (2.2K) | B | 131.8/18.5 |
| R868 | 7030003380 | S.RES ERJ3GEYJ 331 V (330) | B | 134.1/3.9 |
| R869 | 7030003560 | S.RES ERJ3GEYJ 103 V (10K) | B | 114.1/30.0 |
| R870 | 7030003560 | S.RES ERJ3GEYJ 103 V (10K) | B | 144.7/7.3 |
| R871 | 7030003460 | S.RES ERJ3GEYJ 152 V (1.5K) | B | 143.4/7.3 |
| R872 | 7030003470 | S.RES ERJ3GEYJ 182 V (1.8K) | B | 142.1/7.3 |
| R873 | 7030003500 | S.RES ERJ3GEYJ 332 V (3.3K) | B | 138.2/7.3 |
| R874 | 7030003480 | S.RES ERJ3GEYJ 222 V (2.2K) | B | 139.5/7.3 |
| R875 | 7030003380 | S.RES ERJ3GEYJ 331 V (330) | B | 140.9/3.8 |
| R876 | 7030003410 | S.RES ERJ3GEYJ 561 V (560) | B | 120.5/14.9 |
| R877 | 7030003700 | S.RES ERJ3GEYJ 154 V (150K) | B | 120.5/13.6 |
| R878 | 7030003520 | S.RES ERJ3GEYJ 472 V (4.7K) | B | 120.5/12.3 |
| R879 | 7030003550 | S.RES ERJ3GEYJ 822 V (8.2K) | B | 117.9/4.2 |
| R880 | 7030003690 | S.RES ERJ3GEYJ 124 V (120K) | B | 119.8/5.0 |
| R881 | 7030003520 | S.RES ERJ3GEYJ 472 V (4.7K) | B | 122.4/5.0 |
| R882 | 7030003410 | S.RES ERJ3GEYJ 561 V (560) | B | 109.0/16.0 |
| R883 | 7030003550 | S.RES ERJ3GEYJ 822 V (8.2K) | B | 109.0/14.7 |
| R884 | 7030003520 | S.RES ERJ3GEYJ 472 V (4.7K) | B | 109.0/13.4 |
| R885 | 7030003410 | S.RES ERJ3GEYJ 561 V (560) | B | 109.0/4.2 |
| R886 | 7030003550 | S.RES ERJ3GEYJ 822 V (8.2K) | B | 109.7/6.2 |
| R887 | 7030003520 | S.RES ERJ3GEYJ 472 V (4.7K) | B | 108.4/6.2 |
| R888 | 7030003360 | S.RES ERJ3GEYJ 221 V (220) | B | 181.7/48.0 |
| R889 | 7030003640 | S.RES ERJ3GEYJ 473 V (47K) | B | 184.5/48.4 |
| R890 | 7030003360 | S.RES ERJ3GEYJ 221 V (220) | B | 191.0/47.9 |
| R891 | 7030003560 | S.RES ERJ3GEYJ 103 V (10K) | B | 188.2/48.4 |
| R892 | 7030003730 | S.RES ERJ3GEYJ 274 V (270K) | B | 190.3/50.2 |
| R893 | 7030003680 | S.RES ERJ3GEYJ 104 V (100K) | B | 183.8/50.2 |
| R894 | 7030003200 | S.RES ERJ3GEYJ 100 V (10) | B | 193.2/55.7 |
| R895 | 7030003680 | S.RES ERJ3GEYJ 104 V (100K) | B | 189.0/50.2 |
| R896 | 7030003200 | S.RES ERJ3GEYJ 100 V (10) | B | 192.9/52.9 |
| R901 | 7030003200 | S.RES ERJ3GEYJ 100 V (10) | T | 165.7/37.8 |
| R902 | 7030003200 | S.RES ERJ3GEYJ 100 V (10) | T | 166.1/30.9 |
| R903 | 7030003200 | S.RES ERJ3GEYJ 100 V (10) | T | 166.6/40.4 |
| R904 | 7030003200 | S.RES ERJ3GEYJ 100 V (10) | T | 167.1/28.3 |
| R905 | 7030003200 | S.RES ERJ3GEYJ 100 V (10) | T | 167.6/37.8 |
| R906 | 7030003200 | S.RES ERJ3GEYJ 100 V (10) | T | 168.1/30.9 |
| R907 | 7030003200 | S.RES ERJ3GEYJ 100 V (10) | T | 168.6/40.4 |
| R908 | 7030003200 | S.RES ERJ3GEYJ 100 V (10) | T | 169.1/28.3 |
| R909 | 7030003200 | S.RES ERJ3GEYJ 100 V (10) | T | 169.6/37.8 |
| R910 | 7030003200 | S.RES ERJ3GEYJ 100 V (10) | T | 170.1/30.9 |
| R911 | 7030003200 | S.RES ERJ3GEYJ 100 V (10) | T | 170.6/40.4 |
| R912 | 7030003200 | S.RES ERJ3GEYJ 100 V (10) | T | 171.6/37.8 |
| R913 | 7030003200 | S.RES ERJ3GEYJ 100 V (10) | T | 172.1/30.9 |
| R914 | 7030003200 | S.RES ERJ3GEYJ 100 V (10) | T | 172.6/40.3 |
| R915 | 7030003200 | S.RES ERJ3GEYJ 100 V (10) | T | 173.1/28.3 |
| R916 | 7030003200 | S.RES ERJ3GEYJ 100 V (10) | T | 173.6/37.8 |
| R917 | 7030003200 | S.RES ERJ3GEYJ 100 V (10) | T | 174.1/30.9 |
| R918 | 7030003200 | S.RES ERJ3GEYJ 100 V (10) | T | 174.6/40.3 |
| R919 | 7030003200 | S.RES ERJ3GEYJ 100 V (10) | T | 175.1/28.3 |
| R920 | 7030003200 | S.RES ERJ3GEYJ 100 V (10) | T | 175.6/37.8 |
| R921 | 7030003200 | S.RES ERJ3GEYJ 100 V (10) | T | 176.1/30.9 |
| R922 | 7030003200 | S.RES ERJ3GEYJ 100 V (10) | T | 176.6/40.3 |

## [LOGIC UNIT]

| REF NO. | PARTS NO. | DESCRIPTION | M. | H/V LOCATION |
|---|---|---|---|---|
| R923 | 7030003200 | S.RES ERJ3GEYJ 100 V (10) | T | 177.1/28.3 |
| R924 | 7030003200 | S.RES ERJ3GEYJ 100 V (10) | T | 177.6/37.8 |
| R925 | 7030003200 | S.RES ERJ3GEYJ 100 V (10) | T | 178.1/30.9 |
| R926 | 7030003200 | S.RES ERJ3GEYJ 100 V (10) | T | 178.6/40.3 |
| R927 | 7030003200 | S.RES ERJ3GEYJ 100 V (10) | T | 179.1/28.3 |
| R928 | 7030003200 | S.RES ERJ3GEYJ 100 V (10) | T | 179.6/37.8 |
| R929 | 7030003200 | S.RES ERJ3GEYJ 100 V (10) | T | 180.1/30.9 |
| R930 | 7030003200 | S.RES ERJ3GEYJ 100 V (10) | T | 180.6/40.3 |
| R931 | 7030003200 | S.RES ERJ3GEYJ 100 V (10) | T | 181.1/28.3 |
| R932 | 7030003200 | S.RES ERJ3GEYJ 100 V (10) | T | 182.1/30.9 |
| R933 | 7030003200 | S.RES ERJ3GEYJ 100 V (10) | T | 182.6/40.3 |
| R934 | 7030003200 | S.RES ERJ3GEYJ 100 V (10) | T | 183.1/28.3 |
| R935 | 7030003200 | S.RES ERJ3GEYJ 100 V (10) | T | 183.6/37.8 |
| R936 | 7030003200 | S.RES ERJ3GEYJ 100 V (10) | T | 184.1/30.9 |
| R937 | 7030003200 | S.RES ERJ3GEYJ 100 V (10) | T | 185.1/28.3 |
| R938 | 7030003200 | S.RES ERJ3GEYJ 100 V (10) | T | 133.1/37.8 |
| R939 | 7030003200 | S.RES ERJ3GEYJ 100 V (10) | T | 134.2/30.9 |
| R940 | 7030003200 | S.RES ERJ3GEYJ 100 V (10) | T | 134.4/37.8 |
| R941 | 7030003200 | S.RES ERJ3GEYJ 100 V (10) | T | 135.2/28.3 |
| R942 | 7030003200 | S.RES ERJ3GEYJ 100 V (10) | T | 135.7/37.8 |
| R943 | 7030003200 | S.RES ERJ3GEYJ 100 V (10) | T | 136.2/30.9 |
| R944 | 7030003200 | S.RES ERJ3GEYJ 100 V (10) | T | 136.7/40.4 |
| R945 | 7030003200 | S.RES ERJ3GEYJ 100 V (10) | T | 137.2/28.3 |
| R946 | 7030003200 | S.RES ERJ3GEYJ 100 V (10) | T | 137.7/37.8 |
| R947 | 7030003200 | S.RES ERJ3GEYJ 100 V (10) | T | 138.2/30.9 |
| R949 | 7030003200 | S.RES ERJ3GEYJ 100 V (10) | T | 139.2/28.3 |
| R950 | 7030003200 | S.RES ERJ3GEYJ 100 V (10) | T | 139.7/37.8 |
| R951 | 7030003200 | S.RES ERJ3GEYJ 100 V (10) | T | 140.2/30.9 |
| R952 | 7030003200 | S.RES ERJ3GEYJ 100 V (10) | T | 140.7/40.4 |
| R953 | 7030003200 | S.RES ERJ3GEYJ 100 V (10) | T | 141.2/28.3 |
| R954 | 7030003200 | S.RES ERJ3GEYJ 100 V (10) | T | 141.7/37.8 |
| R955 | 7030003200 | S.RES ERJ3GEYJ 100 V (10) | T | 142.2/30.9 |
| R956 | 7030003200 | S.RES ERJ3GEYJ 100 V (10) | T | 142.7/40.4 |
| R957 | 7030003200 | S.RES ERJ3GEYJ 100 V (10) | T | 143.2/28.3 |
| R958 | 7030003200 | S.RES ERJ3GEYJ 100 V (10) | T | 143.7/37.8 |
| R959 | 7030003200 | S.RES ERJ3GEYJ 100 V (10) | T | 144.2/30.9 |
| R960 | 7030003200 | S.RES ERJ3GEYJ 100 V (10) | T | 144.7/40.4 |
| R961 | 7030003200 | S.RES ERJ3GEYJ 100 V (10) | T | 145.7/37.8 |
| R962 | 7030003200 | S.RES ERJ3GEYJ 100 V (10) | T | 146.2/30.9 |
| R963 | 7030003200 | S.RES ERJ3GEYJ 100 V (10) | T | 146.7/40.4 |
| R964 | 7030003200 | S.RES ERJ3GEYJ 100 V (10) | T | 147.2/28.3 |
| R965 | 7030003200 | S.RES ERJ3GEYJ 100 V (10) | T | 147.7/37.8 |
| R966 | 7030003200 | S.RES ERJ3GEYJ 100 V (10) | T | 148.2/30.8 |
| R967 | 7030003200 | S.RES ERJ3GEYJ 100 V (10) | T | 148.7/40.4 |
| R968 | 7030003200 | S.RES ERJ3GEYJ 100 V (10) | T | 149.7/37.8 |
| R969 | 7030003200 | S.RES ERJ3GEYJ 100 V (10) | T | 150.2/28.3 |
| R970 | 7030003200 | S.RES ERJ3GEYJ 100 V (10) | T | 150.7/40.4 |
| R971 | 7030003200 | S.RES ERJ3GEYJ 100 V (10) | T | 151.2/30.8 |
| R974 | 7030003200 | S.RES ERJ3GEYJ 100 V (10) | T | 153.2/30.8 |
| R975 | 7030003200 | S.RES ERJ3GEYJ 100 V (10) | B | 214.5/83.4 |
| R976 | 7030003200 | S.RES ERJ3GEYJ 100 V (10) | B | 220.7/83.0 |
| R977 | 7030003200 | S.RES ERJ3GEYJ 100 V (10) | B | 214.5/86.0 |
| R978 | 7030003200 | S.RES ERJ3GEYJ 100 V (10) | B | 220.7/87.0 |
| R979 | 7030003200 | S.RES ERJ3GEYJ 100 V (10) | B | 214.5/88.0 |
| R980 | 7030003200 | S.RES ERJ3GEYJ 100 V (10) | B | 220.7/89.0 |
| R981 | 7030003200 | S.RES ERJ3GEYJ 100 V (10) | B | 220.7/91.0 |
| R982 | 7030003200 | S.RES ERJ3GEYJ 100 V (10) | B | 220.7/93.0 |
| R983 | 7030003200 | S.RES ERJ3GEYJ 100 V (10) | B | 214.5/94.0 |
| R984 | 7030003200 | S.RES ERJ3GEYJ 100 V (10) | B | 12.3/115.8 |
| R985 | 7030003200 | S.RES ERJ3GEYJ 100 V (10) | B | 13.6/115.8 |
| R986 | 7030003200 | S.RES ERJ3GEYJ 100 V (10) | B | 14.9/115.8 |
| R987 | 7030003200 | S.RES ERJ3GEYJ 100 V (10) | B | 16.2/115.8 |
| R988 | 7030003200 | S.RES ERJ3GEYJ 100 V (10) | B | 17.5/115.8 |
| R989 | 7030003200 | S.RES ERJ3GEYJ 100 V (10) | T | 181.6/37.8 |
| R990 | 7030003440 | S.RES ERJ3GEYJ 102 V (1K) | B | 182.5/92.2 |
| R991 | 7030003440 | S.RES ERJ3GEYJ 102 V (1K) | B | 183.5/83.6 |
| R992 | 7030003440 | S.RES ERJ3GEYJ 102 V (1K) | B | 184.5/92.2 |
| R993 | 7030003440 | S.RES ERJ3GEYJ 102 V (1K) | B | 185.5/83.6 |
| R994 | 7030003440 | S.RES ERJ3GEYJ 102 V (1K) | B | 186.5/92.2 |
| R995 | 7030003440 | S.RES ERJ3GEYJ 102 V (1K) | B | 187.5/83.6 |
| R996 | 7030003200 | S.RES ERJ3GEYJ 100 V (10) | B | 220.7/95.6 |
| R998 | 7030003440 | S.RES ERJ3GEYJ 102 V (1K) | B | 190.5/92.2 |
| R999 | 7030003440 | S.RES ERJ3GEYJ 102 V (1K) | B | 191.5/83.6 |
| R1000 | 7030003440 | S.RES ERJ3GEYJ 102 V (1K) | B | 192.5/92.2 |
| R1003 | 7030003200 | S.RES ERJ3GEYJ 100 V (10) | B | 231.4/83.0 |
| R1004 | 7030003200 | S.RES ERJ3GEYJ 100 V (10) | B | 225.9/82.8 |
| R1005 | 7030003200 | S.RES ERJ3GEYJ 100 V (10) | B | 231.4/81.0 |
| R1006 | 7030003200 | S.RES ERJ3GEYJ 100 V (10) | B | 222.8/80.0 |
| R1007 | 7030003200 | S.RES ERJ3GEYJ 100 V (10) | B | 231.4/79.0 |
| R1008 | 7030003200 | S.RES ERJ3GEYJ 100 V (10) | B | 222.8/48.5 |
| R1009 | 7030003200 | S.RES ERJ3GEYJ 100 V (10) | B | 231.4/49.5 |
| R1010 | 7030003200 | S.RES ERJ3GEYJ 100 V (10) | B | 222.8/52.5 |
| R1011 | 7030003200 | S.RES ERJ3GEYJ 100 V (10) | B | 231.4/53.5 |
| R1012 | 7030003200 | S.RES ERJ3GEYJ 100 V (10) | B | 222.8/56.5 |
| R1013 | 7030003200 | S.RES ERJ3GEYJ 100 V (10) | B | 231.4/57.5 |
| R1014 | 7030003200 | S.RES ERJ3GEYJ 100 V (10) | B | 222.8/58.5 |
| R1015 | 7030003200 | S.RES ERJ3GEYJ 100 V (10) | B | 231.4/59.5 |
| R1016 | 7030003200 | S.RES ERJ3GEYJ 100 V (10) | T | 181.0/22.1 |
| R1017 | 7030003200 | S.RES ERJ3GEYJ 100 V (10) | T | 179.7/22.1 |
| R1018 | 7030003200 | S.RES ERJ3GEYJ 100 V (10) | T | 176.7/22.1 |
| R1019 | 7030003200 | S.RES ERJ3GEYJ 100 V (10) | T | 174.8/22.2 |
| R1020 | 7030003200 | S.RES ERJ3GEYJ 100 V (10) | T | 173.5/22.2 |
| R1021 | 7030003200 | S.RES ERJ3GEYJ 100 V (10) | T | 172.2/22.2 |
| R1022 | 7030003200 | S.RES ERJ3GEYJ 100 V (10) | T | 170.8/22.2 |
| R1023 | 7030003200 | S.RES ERJ3GEYJ 100 V (10) | T | 169.5/22.2 |
| R1024 | 7030003200 | S.RES ERJ3GEYJ 100 V (10) | B | 220.8/85.0 |
| R1025 | 7030003320 | S.RES ERJ3GEYJ 101 V (100) | B | 120.5/9.7 |
| R1026 | 7030003320 | S.RES ERJ3GEYJ 101 V (100) | B | 109.0/8.2 |
| R1027 | 7030003320 | S.RES ERJ3GEYJ 101 V (100) | B | 137.4/17.2 |
| R1028 | 7030003320 | S.RES ERJ3GEYJ 101 V (100) | B | 135.6/7.3 |
| R1029 | 7030003520 | S.RES ERJ3GEYJ 472 V (4.7K) | B | 120.5/11.0 |
| R1030 | 7030003520 | S.RES ERJ3GEYJ 472 V (4.7K) | B | 120.5/7.1 |
| R1031 | 7030003520 | S.RES ERJ3GEYJ 472 V (4.7K) | B | 109.0/12.1 |
| R1032 | 7030003520 | S.RES ERJ3GEYJ 472 V (4.7K) | B | 109.0/9.5 |
| R1033 | 7030003860 | S.RES ERJ3GE JPW V | T | 189.0/62.5 |

Eqv.= This component is equivalent to the REF No. component listed above, and may be substituted on parts orders and repairs.

M.=Mounted side (T: Mounted on the Top side, B: Mounted on the Bottom side)
S.=Surface mount

## [LOGIC UNIT]

| REF NO. | PARTS NO. | DESCRIPTION | M. | H/V LOCATION |
|---|---|---|---|---|
| R1035 | 7030003540 | S.RES ERJ3GEYJ 682 V (6.8K) | B | 192.3/60.1 |
| R1036 | 7030003540 | S.RES ERJ3GEYJ 682 V (6.8K) | B | 184.5/64.8 |
| R1041 | 7030003520 | S.RES ERJ3GEYJ 472 V (4.7K) | B | 173.8/28.3 |
| R1042 | 7030003550 | S.RES ERJ3GEYJ 822 V (8.2K) | T | 115.2/16.7 |
| R1052 | 7030008240 | S.RES ERJ12Y0R00U | T | 86.1/114.4 |
| R1053 | 7030008240 | S.RES ERJ12Y0R00U | T | 67.5/114.4 |
| R1054 | 7030008240 | S.RES ERJ12Y0R00U | T | 9.4/116.8 |
| R1056 | 7030003860 | S.RES ERJ3GE JPW V | T | 138.7/40.3 |
| R1057 | 7030003860 | S.RES ERJ3GE JPW V | B | 123.1/7.2 |
| R1101 | 7030003280 | S.RES ERJ3GEYJ 470 V (47) | T | 18.7/30.5 |
| R1102 | 7030003280 | S.RES ERJ3GEYJ 470 V (47) | T | 18.7/33.1 |
| R1103 | 7030003280 | S.RES ERJ3GEYJ 470 V (47) | T | 18.7/35.7 |
| R1104 | 7030003280 | S.RES ERJ3GEYJ 470 V (47) | T | 20.5/30.5 |
| R1105 | 7030003280 | S.RES ERJ3GEYJ 470 V (47) | T | 20.5/33.1 |
| R1106 | 7030003280 | S.RES ERJ3GEYJ 470 V (47) | T | 20.5/35.7 |
| R1107 | 7030003280 | S.RES ERJ3GEYJ 470 V (47) | T | 22.3/30.5 |
| R1108 | 7030003280 | S.RES ERJ3GEYJ 470 V (47) | T | 22.3/33.1 |
| R1109 | 7030003280 | S.RES ERJ3GEYJ 470 V (47) | T | 22.3/35.7 |
| R1110 | 7030003280 | S.RES ERJ3GEYJ 470 V (47) | T | 24.1/27.9 |
| R1111 | 7030003280 | S.RES ERJ3GEYJ 470 V (47) | T | 24.1/30.5 |
| R1112 | 7030003280 | S.RES ERJ3GEYJ 470 V (47) | T | 24.1/33.1 |
| R1113 | 7030003280 | S.RES ERJ3GEYJ 470 V (47) | T | 25.9/27.9 |
| R1114 | 7030003280 | S.RES ERJ3GEYJ 470 V (47) | T | 25.9/30.5 |
| R1115 | 7030003280 | S.RES ERJ3GEYJ 470 V (47) | T | 25.9/33.1 |
| R1116 | 7030003280 | S.RES ERJ3GEYJ 470 V (47) | T | 27.3/30.5 |
| R1117 | 7030003280 | S.RES ERJ3GEYJ 470 V (47) | T | 28.6/30.5 |
| R1118 | 7030003280 | S.RES ERJ3GEYJ 470 V (47) | T | 29.9/30.5 |
| R1119 | 7030003280 | S.RES ERJ3GEYJ 470 V (47) | T | 31.2/30.5 |
| R1120 | 7030003280 | S.RES ERJ3GEYJ 470 V (47) | T | 32.5/30.5 |
| R1121 | 7030003280 | S.RES ERJ3GEYJ 470 V (47) | T | 33.8/30.5 |
| R1122 | 7030003280 | S.RES ERJ3GEYJ 470 V (47) | T | 35.1/30.5 |
| R1123 | 7030003280 | S.RES ERJ3GEYJ 470 V (47) | T | 40.5/29.6 |
| R1124 | 7030003280 | S.RES ERJ3GEYJ 470 V (47) | T | 42.8/34.8 |
| R1125 | 7030003280 | S.RES ERJ3GEYJ 470 V (47) | T | 43.5/32.2 |
| R1126 | 7030003280 | S.RES ERJ3GEYJ 470 V (47) | T | 44.2/34.8 |
| R1127 | 7030003280 | S.RES ERJ3GEYJ 470 V (47) | T | 44.9/32.2 |
| R1128 | 7030003280 | S.RES ERJ3GEYJ 470 V (47) | T | 45.6/34.8 |
| R1129 | 7030003280 | S.RES ERJ3GEYJ 470 V (47) | T | 46.3/32.2 |
| R1130 | 7030003280 | S.RES ERJ3GEYJ 470 V (47) | T | 47.0/34.8 |
| R1131 | 7030003280 | S.RES ERJ3GEYJ 470 V (47) | T | 47.7/32.2 |
| R1132 | 7030003280 | S.RES ERJ3GEYJ 470 V (47) | T | 48.4/34.8 |
| R1133 | 7030003280 | S.RES ERJ3GEYJ 470 V (47) | T | 49.1/32.2 |
| R1134 | 7030003280 | S.RES ERJ3GEYJ 470 V (47) | T | 49.8/34.8 |
| R1135 | 7030003280 | S.RES ERJ3GEYJ 470 V (47) | T | 50.5/32.2 |
| R1136 | 7030003280 | S.RES ERJ3GEYJ 470 V (47) | T | 51.2/34.8 |
| R1137 | 7030003280 | S.RES ERJ3GEYJ 470 V (47) | T | 51.9/32.2 |
| R1138 | 7030003280 | S.RES ERJ3GEYJ 470 V (47) | T | 52.6/34.8 |
| R1139 | 7030003280 | S.RES ERJ3GEYJ 470 V (47) | T | 53.3/32.2 |
| R1140 | 7030003280 | S.RES ERJ3GEYJ 470 V (47) | T | 54.0/34.8 |
| R1141 | 7030003280 | S.RES ERJ3GEYJ 470 V (47) | T | 54.7/32.2 |
| R1142 | 7030003280 | S.RES ERJ3GEYJ 470 V (47) | T | 55.4/34.8 |
| R1143 | 7030003280 | S.RES ERJ3GEYJ 470 V (47) | T | 56.1/32.2 |
| R1144 | 7030003280 | S.RES ERJ3GEYJ 470 V (47) | T | 56.8/34.8 |
| R1145 | 7030003280 | S.RES ERJ3GEYJ 470 V (47) | T | 57.5/32.2 |
| R1146 | 7030003280 | S.RES ERJ3GEYJ 470 V (47) | T | 58.2/34.8 |
| R1151 | 7030003290 | S.RES ERJ3GEYJ 560 V (56) | T | 205.2/11.8 |
| R1152 | 7030003320 | S.RES ERJ3GEYJ 101 V (100) | T | 203.7/11.8 |
| R1153 | 7030003320 | S.RES ERJ3GEYJ 101 V (100) | T | 200.9/13.2 |
| R1154 | 7030003320 | S.RES ERJ3GEYJ 101 V (100) | T | 199.6/13.2 |
| R1155 | 7030003320 | S.RES ERJ3GEYJ 101 V (100) | B | 201.4/10.9 |
| R1156 | 7030003320 | S.RES ERJ3GEYJ 101 V (100) | T | 198.3/13.2 |
| R1157 | 7030003320 | S.RES ERJ3GEYJ 101 V (100) | B | 200.1/10.9 |
| R1158 | 7030003320 | S.RES ERJ3GEYJ 101 V (100) | T | 197.0/13.2 |
| R1159 | 7030003320 | S.RES ERJ3GEYJ 101 V (100) | B | 198.0/10.9 |
| R1160 | 7030003320 | S.RES ERJ3GEYJ 101 V (100) | T | 195.7/13.2 |
| R1161 | 7030003320 | S.RES ERJ3GEYJ 101 V (100) | B | 197.5/10.9 |
| R1162 | 7030003320 | S.RES ERJ3GEYJ 101 V (100) | B | 196.2/10.9 |
| R1163 | 7030003320 | S.RES ERJ3GEYJ 101 V (100) | T | 194.4/13.2 |
| R1164 | 7030003320 | S.RES ERJ3GEYJ 101 V (100) | T | 193.1/13.2 |
| R1165 | 7030003320 | S.RES ERJ3GEYJ 101 V (100) | T | 191.1/14.9 |
| R1166 | 7030003320 | S.RES ERJ3GEYJ 101 V (100) | T | 189.8/14.9 |
| R1167 | 7030003320 | S.RES ERJ3GEYJ 101 V (100) | T | 188.5/14.9 |
| R1168 | 7030003320 | S.RES ERJ3GEYJ 101 V (100) | T | 187.2/14.9 |
| R1169 | 7030003320 | S.RES ERJ3GEYJ 101 V (100) | T | 185.9/14.9 |
| R1170 | 7030003320 | S.RES ERJ3GEYJ 101 V (100) | T | 181.5/9.5 |
| | | | | |
| C1 | 4030011600 | S.CER C1608 JB 1E 104K-T | B | 69.7/83.3 |
| C2 | 4030011600 | S.CER C1608 JB 1E 104K-T | B | 68.1/83.3 |
| C3 | 4030011600 | S.CER C1608 JB 1E 104K-T | B | 63.3/83.3 |
| C4 | 4030011600 | S.CER C1608 JB 1E 104K-T | B | 59.3/83.3 |
| C5 | 4030011600 | S.CER C1608 JB 1E 104K-T | B | 48.9/83.3 |
| C6 | 4030011600 | S.CER C1608 JB 1E 104K-T | B | 66.9/100.4 |
| C7 | 4030011600 | S.CER C1608 JB 1E 104K-T | B | 62.1/100.4 |
| C8 | 4030011600 | S.CER C1608 JB 1E 104K-T | T | 69.7/107.5 |
| C9 | 4030011600 | S.CER C1608 JB 1E 104K-T | T | 68.1/107.5 |
| C10 | 4030011600 | S.CER C1608 JB 1E 104K-T | T | 63.3/107.5 |
| C11 | 4030011600 | S.CER C1608 JB 1E 104K-T | T | 59.3/107.5 |
| C12 | 4030011600 | S.CER C1608 JB 1E 104K-T | T | 48.9/107.5 |
| C13 | 4030011600 | S.CER C1608 JB 1E 104K-T | T | 66.6/90.9 |
| C14 | 4030011600 | S.CER C1608 JB 1E 104K-T | T | 61.9/90.9 |
| C51 | 4030011600 | S.CER C1608 JB 1E 104K-T | B | 105.5/54.7 |
| C52 | 4030011600 | S.CER C1608 JB 1E 104K-T | B | 97.1/46.1 |
| C53 | 4030011600 | S.CER C1608 JB 1E 104K-T | B | 94.4/46.1 |
| C54 | 4030011600 | S.CER C1608 JB 1E 104K-T | B | 106.6/51.0 |
| C55 | 4030011600 | S.CER C1608 JB 1E 104K-T | B | 109.0/65.9 |
| C56 | 4030011600 | S.CER C1608 JB 1E 104K-T | B | 114.0/65.9 |
| C57 | 4030011600 | S.CER C1608 JB 1E 104K-T | B | 127.7/63.2 |
| C58 | 4030011600 | S.CER C1608 JB 1E 104K-T | B | 127.8/56.0 |
| C59 | 4030011600 | S.CER C1608 JB 1E 104K-T | B | 117.5/46.1 |
| C60 | 4030011600 | S.CER C1608 JB 1E 104K-T | B | 111.6/46.1 |
| C61 | 4030009990 | S.CER C1608 CH 1H 200J-T | T | 143.1/78.1 |
| C62 | 4030011600 | S.CER C1608 JB 1E 104K-T | T | 140.0/100.7 |
| C63 | 4030008890 | S.CER C1608 JB 1H 273K-T | T | 144.6/100.7 |
| C64 | 4030011600 | S.CER C1608 JB 1E 104K-T | T | 146.7/102.6 |

## [LOGIC UNIT]

| REF NO. | PARTS NO. | DESCRIPTION | M. | H/V LOCATION |
|---|---|---|---|---|
| C65 | 4030011600 | S.CER C1608 JB 1E 104K-T | T | 96.1/34.3 |
| C66 | 4030011600 | S.CER C1608 JB 1E 104K-T | B | 34.1/27.5 |
| C101 | 4030011600 | S.CER C1608 JB 1E 104K-T | T | 23.4/71.9 |
| C102 | 4030011600 | S.CER C1608 JB 1E 104K-T | B | 43.3/48.2 |
| C103 | 4030011600 | S.CER C1608 JB 1E 104K-T | B | 47.2/78.1 |
| C104 | 4030011600 | S.CER C1608 JB 1E 104K-T | B | 46.9/58.8 |
| C105 | 4030011600 | S.CER C1608 JB 1E 104K-T | B | 49.5/71.0 |
| C106 | 4030011600 | S.CER C1608 JB 1E 104K-T | B | 46.9/57.5 |
| C107 | 4030011600 | S.CER C1608 JB 1E 104K-T | B | 52.1/57.5 |
| C108 | 4030011600 | S.CER C1608 JB 1E 104K-T | B | 57.8/57.5 |
| C109 | 4030011600 | S.CER C1608 JB 1E 104K-T | B | 59.6/60.9 |
| C110 | 4030011600 | S.CER C1608 JB 1E 104K-T | B | 46.9/68.0 |
| C111 | 4550007520 | S.TAN F931A106MAABMA | B | 57.8/48.8 |
| C112 | 4030011600 | S.CER C1608 JB 1E 104K-T | B | 59.0/50.5 |
| C113 | 4550007520 | S.TAN F931A106MAABMA | B | 63.6/48.8 |
| C114 | 4030011600 | S.CER C1608 JB 1E 104K-T | B | 62.1/50.5 |
| C115 | 4550007520 | S.TAN F931A106MAABMA | B | 68.9/48.8 |
| C116 | 4030011600 | S.CER C1608 JB 1E 104K-T | B | 65.0/50.5 |
| C117 | 4030011600 | S.CER C1608 JB 1E 104K-T | B | 46.9/71.0 |
| C118 | 4030011600 | S.CER C1608 JB 1E 104K-T | B | 46.9/61.4 |
| C119 | 4030011600 | S.CER C1608 JB 1E 104K-T | B | 46.9/69.4 |
| C120 | 4030011600 | S.CER C1608 JB 1E 104K-T | B | 59.6/69.4 |
| C121 | 4030011600 | S.CER C1608 JB 1E 104K-T | B | 57.9/70.3 |
| C122 | 4030011600 | S.CER C1608 JB 1E 104K-T | B | 56.6/70.3 |
| C123 | 4030006860 | S.CER C1608 JB 1H 102K-T | B | 57.3/78.1 |
| C124 | 4030011600 | S.CER C1608 JB 1E 104K-T | B | 52.1/71.0 |
| C125 | 4030011600 | S.CER C1608 JB 1E 104K-T | B | 54.7/71.0 |
| C126 | 4030011600 | S.CER C1608 JB 1E 104K-T | B | 46.9/66.7 |
| C127 | 4030011600 | S.CER C1608 JB 1E 104K-T | B | 43.3/50.8 |
| C128 | 4030011600 | S.CER C1608 JB 1E 104K-T | B | 52.3/50.8 |
| C129 | 4030011600 | S.CER C1608 JB 1E 104K-T | B | 46.1/64.9 |
| C130 | 4030011600 | S.CER C1608 JB 1E 104K-T | B | 59.6/66.8 |
| C131 | 4030011600 | S.CER C1608 JB 1E 104K-T | B | 66.5/68.7 |
| C132 | 4030011600 | S.CER C1608 JB 1E 104K-T | B | 59.6/63.7 |
| C133 | 4030011600 | S.CER C1608 JB 1E 104K-T | B | 47.2/51.0 |
| C134 | 4030011600 | S.CER C1608 JB 1E 104K-T | B | 39.3/58.7 |
| C135 | 4030011600 | S.CER C1608 JB 1E 104K-T | B | 46.9/60.1 |
| C136 | 4030011600 | S.CER C1608 JB 1E 104K-T | B | 54.7/57.5 |
| C137 | 4030011600 | S.CER C1608 JB 1E 104K-T | B | 49.5/57.5 |
| C138 | 4030011600 | S.CER C1608 JB 1E 104K-T | B | 54.7/69.4 |
| C139 | 4030011600 | S.CER C1608 JB 1E 104K-T | B | 59.6/58.3 |
| C140 | 4030006900 | S.CER C1608 JB 1H 103K-T | B | 66.5/58.6 |
| C141 | 4030011600 | S.CER C1608 JB 1E 104K-T | T | 64.4/38.7 |
| C142 | 4030011600 | S.CER C1608 JB 1E 104K-T | T | 76.8/32.5 |
| C144 | 4030011600 | S.CER C1608 JB 1E 104K-T | T | 8.0/62.8 |
| C145 | 4030011600 | S.CER C1608 JB 1E 104K-T | T | 10.0/62.2 |
| C146 | 4030007020 | S.CER C1608 CH 1H 120J-T | T | 8.2/58.8 |
| C147 | 4030007020 | S.CER C1608 CH 1H 120J-T | T | 10.0/59.6 |
| C148 | 4030011600 | S.CER C1608 JB 1E 104K-T | T | 6.8/70.6 |
| C149 | 4030011600 | S.CER C1608 JB 1E 104K-T | T | 7.5/73.7 |
| C201 | 4030011600 | S.CER C1608 JB 1E 104K-T | B | 118.2/103.3 |
| C202 | 4030011600 | S.CER C1608 JB 1E 104K-T | B | 120.8/103.3 |
| C203 | 4030011600 | S.CER C1608 JB 1E 104K-T | B | 124.3/103.3 |
| C204 | 4030011600 | S.CER C1608 JB 1E 104K-T | B | 127.4/103.3 |
| C205 | 4030011600 | S.CER C1608 JB 1E 104K-T | B | 137.4/103.5 |
| C206 | 4030011600 | S.CER C1608 JB 1E 104K-T | B | 120.8/87.7 |
| C207 | 4030011600 | S.CER C1608 JB 1E 104K-T | B | 125.6/87.7 |
| C208 | 4030011600 | S.CER C1608 JB 1E 104K-T | B | 117.8/85.8 |
| C209 | 4030011600 | S.CER C1608 JB 1E 104K-T | B | 119.3/85.8 |
| C210 | 4030011600 | S.CER C1608 JB 1E 104K-T | B | 124.1/85.8 |
| C211 | 4030011600 | S.CER C1608 JB 1E 104K-T | B | 128.1/85.8 |
| C212 | 4030011600 | S.CER C1608 JB 1E 104K-T | B | 138.5/85.8 |
| C213 | 4030011600 | S.CER C1608 JB 1E 104K-T | B | 120.7/70.0 |
| C214 | 4030011600 | S.CER C1608 JB 1E 104K-T | B | 124.2/70.1 |
| C215 | 4030011600 | S.CER C1608 JB 1E 104K-T | B | 89.4/90.4 |
| C216 | 4030011600 | S.CER C1608 JB 1E 104K-T | B | 85.6/71.6 |
| C217 | 4030011600 | S.CER C1608 JB 1E 104K-T | B | 91.6/79.7 |
| C218 | 4030011600 | S.CER C1608 JB 1E 104K-T | B | 92.1/72.6 |
| C219 | 4030011600 | S.CER C1608 JB 1E 104K-T | B | 94.7/72.6 |
| C220 | 4030011600 | S.CER C1608 JB 1E 104K-T | B | 90.8/72.6 |
| C221 | 4030011600 | S.CER C1608 JB 1E 104K-T | B | 96.6/66.6 |
| C222 | 4030011600 | S.CER C1608 JB 1E 104K-T | B | 94.4/89.4 |
| C223 | 4030011600 | S.CER C1608 JB 1E 104K-T | B | 90.8/83.5 |
| C224 | 4030011600 | S.CER C1608 JB 1E 104K-T | B | 85.6/83.8 |
| C225 | 4030011600 | S.CER C1608 JB 1E 104K-T | B | 91.6/77.1 |
| C226 | 4030011600 | S.CER C1608 JB 1E 104K-T | B | 91.6/75.8 |
| C227 | 4030011600 | S.CER C1608 JB 1E 104K-T | B | 96.7/72.6 |
| C228 | 4030011600 | S.CER C1608 JB 1E 104K-T | B | 91.6/74.5 |
| C229 | 4030011600 | S.CER C1608 JB 1E 104K-T | B | 100.6/89.4 |
| C230 | 4030011600 | S.CER C1608 JB 1E 104K-T | B | 97.3/83.3 |
| C231 | 4030011600 | S.CER C1608 JB 1E 104K-T | B | 102.5/83.6 |
| C232 | 4030011600 | S.CER C1608 JB 1E 104K-T | B | 91.6/81.0 |
| C233 | 4030011600 | S.CER C1608 JB 1E 104K-T | B | 102.5/77.1 |
| C234 | 4030011600 | S.CER C1608 JB 1E 104K-T | B | 99.3/72.6 |
| C235 | 4030011600 | S.CER C1608 JB 1E 104K-T | B | 102.2/66.4 |
| C236 | 4030011600 | S.CER C1608 JB 1E 104K-T | B | 102.5/82.3 |
| C237 | 4030011600 | S.CER C1608 JB 1E 104K-T | B | 102.5/81.0 |
| C238 | 4030011600 | S.CER C1608 JB 1E 104K-T | B | 102.5/79.7 |
| C239 | 4030011600 | S.CER C1608 JB 1E 104K-T | B | 85.6/81.2 |
| C240 | 4030011600 | S.CER C1608 JB 1E 104K-T | B | 102.5/75.8 |
| C241 | 4030011600 | S.CER C1608 JB 1E 104K-T | B | 102.5/74.5 |
| C242 | 4030011600 | S.CER C1608 JB 1E 104K-T | B | 103.2/72.6 |
| C243 | 4030011600 | S.CER C1608 JB 1E 104K-T | B | 101.9/72.6 |
| C244 | 4030011600 | S.CER C1608 JB 1E 104K-T | B | 91.6/78.4 |
| C245 | 4030011600 | S.CER C1608 JB 1E 104K-T | B | 92.1/83.3 |
| C246 | 4030011600 | S.CER C1608 JB 1E 104K-T | B | 102.5/78.4 |
| C247 | 4030011600 | S.CER C1608 JB 1E 104K-T | B | 99.4/83.3 |
| C248 | 4030011600 | S.CER C1608 JB 1E 104K-T | B | 100.6/72.6 |
| C249 | 4030011600 | S.CER C1608 JB 1E 104K-T | B | 93.4/72.6 |
| C250 | 4030007050 | S.CER C1608 CH 1H 220J-T | T | 101.1/91.3 |
| C251 | 4030007050 | S.CER C1608 CH 1H 220J-T | T | 98.5/91.3 |
| C252 | 4030006990 | S.CER C1608 CH 1H 080D-T | T | 99.0/63.9 |
| C253 | 4030006990 | S.CER C1608 CH 1H 080D-T | T | 101.6/63.9 |
| C254 | 4030006900 | S.CER C1608 JB 1H 103K-T | T | 83.8/84.6 |
| C255 | 4510008520 | S.ELE EEE1CA470SP | T | 101.3/100.8 |

Eqv.= This component is equivalent to the REF No. component listed above, and may be substituted on parts orders and repairs.

M.=Mounted side (T: Mounted on the Top side, B: Mounted on the Bottom side)
S.=Surface mount

## [LOGIC UNIT]

| REF NO. | PARTS NO. | DESCRIPTION | M. | H/V LOCATION |
|---|---|---|---|---|
| C256 | 4030006900 | S.CER C1608 JB 1H 103K-T | T | 83.0/64.2 |
| C257 | 4510007130 | S.ELE EEFCD 0J 470R | T | 78.5/66.3 |
| C258 | 4030011600 | S.CER C1608 JB 1E 104K-T | T | 84.9/61.0 |
| C259 | 4030011600 | S.CER C1608 JB 1E 104K-T | B | 85.6/76.9 |
| C260 | 4030011600 | S.CER C1608 JB 1E 104K-T | T | 214.3/33.1 |
| C261 | 4030011600 | S.CER C1608 JB 1E 104K-T | T | 214.3/31.8 |
| C262 | 4030011600 | S.CER C1608 JB 1E 104K-T | T | 214.3/29.8 |
| C263 | 4030011600 | S.CER C1608 JB 1E 104K-T | T | 214.3/28.5 |
| C264 | 4030011600 | S.CER C1608 JB 1E 104K-T | T | 205.4/23.2 |
| C265 | 4510008540 | S.ELE EEE1CA100SR | T | 214.2/36.7 |
| C266 | 4030011600 | S.CER C1608 JB 1E 104K-T | T | 196.3/28.8 |
| C267 | 4030007100 | S.CER C1608 CH 1H 560J-T | B | 219.4/32.6 |
| C268 | 4030007100 | S.CER C1608 CH 1H 560J-T | B | 219.4/29.6 |
| C269 | 4030007100 | S.CER C1608 CH 1H 560J-T | B | 219.4/26.6 |
| C270 | 4030007050 | S.CER C1608 CH 1H 220J-T | B | 225.0/32.6 |
| C271 | 4030007050 | S.CER C1608 CH 1H 220J-T | B | 225.0/29.6 |
| C272 | 4030007050 | S.CER C1608 CH 1H 220J-T | B | 225.0/26.6 |
| C273 | 4030011600 | S.CER C1608 JB 1E 104K-T | T | 194.2/16.6 |
| C274 | 4030007170 | S.CER C1608 CH 1H 221J-T | T | 204.0/16.5 |
| C275 | 4030007170 | S.CER C1608 CH 1H 221J-T | T | 204.0/19.4 |
| C276 | 4030007050 | S.CER C1608 CH 1H 220J-T | B | 217.9/9.3 |
| C277 | 4030007050 | S.CER C1608 CH 1H 220J-T | B | 220.8/9.3 |
| C278 | 4510008500 | S.ELE EEE1CA101WP | T | 223.5/38.4 |
| C279 | 4030007050 | S.CER C1608 CH 1H 220J-T | B | 227.9/9.3 |
| C280 | 4030007050 | S.CER C1608 CH 1H 220J-T | B | 230.7/9.3 |
| C281 | 4510008500 | S.ELE EEE1CA101WP | T | 223.5/30.6 |
| C282 | 4030011600 | S.CER C1608 JB 1E 104K-T | B | 215.6/39.1 |
| C283 | 4510008550 | S.ELE EEE1HA010SR | T | 217.2/42.0 |
| C284 | 4030011600 | S.CER C1608 JB 1E 104K-T | B | 104.7/21.3 |
| C285 | 4510008540 | S.ELE EEE1CA100SR | T | 105.7/37.5 |
| C286 | 4510008540 | S.ELE EEE1CA100SR | T | 105.7/32.7 |
| C287 | 4030011600 | S.CER C1608 JB 1E 104K-T | B | 104.7/23.3 |
| C288 | 4510008540 | S.ELE EEE1CA100SR | T | 105.7/27.9 |
| C289 | 4030011600 | S.CER C1608 JB 1E 104K-T | B | 104.7/24.6 |
| C290 | 4030011600 | S.CER C1608 JB 1E 104K-T | B | 115.6/21.3 |
| C291 | 4510008540 | S.ELE EEE1CA100SR | T | 111.8/37.5 |
| C292 | 4510008540 | S.ELE EEE1CA100SR | T | 111.8/32.7 |
| C293 | 4030011600 | S.CER C1608 JB 1E 104K-T | B | 115.6/23.3 |
| C294 | 4510008540 | S.ELE EEE1CA100SR | T | 111.8/27.9 |
| C295 | 4030011600 | S.CER C1608 JB 1E 104K-T | B | 115.6/24.6 |
| C296 | 4030011600 | S.CER C1608 JB 1E 104K-T | B | 126.4/33.9 |
| C297 | 4510008540 | S.ELE EEE1CA100SR | T | 124.0/39.9 |
| C298 | 4030011600 | S.CER C1608 JB 1E 104K-T | B | 126.4/31.3 |
| C299 | 4510008540 | S.ELE EEE1CA100SR | T | 124.0/35.1 |
| C300 | 4030011600 | S.CER C1608 JB 1E 104K-T | B | 114.0/34.6 |
| C301 | 4510008540 | S.ELE EEE1CA100SR | T | 117.9/39.9 |
| C302 | 4030011600 | S.CER C1608 JB 1E 104K-T | B | 113.4/32.5 |
| C303 | 4510008540 | S.ELE EEE1CA100SR | T | 117.9/35.1 |
| C401 | 4030011600 | S.CER C1608 JB 1E 104K-T | B | 28.2/61.5 |
| C402 | 4030011600 | S.CER C1608 JB 1E 104K-T | B | 22.3/61.5 |
| C403 | 4030011600 | S.CER C1608 JB 1E 104K-T | B | 8.8/53.3 |
| C404 | 4030011600 | S.CER C1608 JB 1E 104K-T | B | 8.8/45.7 |
| C405 | 4030011600 | S.CER C1608 JB 1E 104K-T | B | 20.3/35.7 |
| C406 | 4030011600 | S.CER C1608 JB 1E 104K-T | B | 25.5/35.7 |
| C407 | 4030011600 | S.CER C1608 JB 1E 104K-T | B | 29.8/35.7 |
| C408 | 4030011600 | S.CER C1608 JB 1E 104K-T | B | 38.5/42.4 |
| C409 | 4030011600 | S.CER C1608 JB 1E 104K-T | B | 38.7/47.6 |
| C410 | 4030011600 | S.CER C1608 JB 1E 104K-T | B | 38.7/51.0 |
| C411 | 4030011600 | S.CER C1608 JB 1E 104K-T | B | 41.0/36.2 |
| C412 | 4030006860 | S.CER C1608 JB 1H 102K-T | T | 29.4/44.8 |
| C413 | 4030006900 | S.CER C1608 JB 1H 103K-T | T | 26.8/44.8 |
| C414 | 4030007150 | S.CER C1608 CH 1H 151J-T | T | 28.1/44.8 |
| C415 | 4030011600 | S.CER C1608 JB 1E 104K-T | B | 15.3/30.6 |
| C416 | 4510008540 | S.ELE EEE1CA100SR | T | 13.7/28.8 |
| C417 | 4030011600 | S.CER C1608 JB 1E 104K-T | B | 15.3/31.9 |
| C418 | 4510008540 | S.ELE EEE1CA100SR | T | 13.7/33.6 |
| C419 | 4030006900 | S.CER C1608 JB 1H 103K-T | T | 36.9/26.6 |
| C420 | 4030007150 | S.CER C1608 CH 1H 151J-T | T | 36.9/25.3 |
| C421 | 4550007520 | S.TAN F931A106MAABMA | B | 19.7/26.8 |
| C422 | 4030011600 | S.CER C1608 JB 1E 104K-T | T | 20.8/66.3 |
| C423 | 4030011600 | S.CER C1608 JB 1E 104K-T | B | 35.4/85.2 |
| C424 | 4030011600 | S.CER C1608 JB 1E 104K-T | B | 38.2/77.2 |
| C425 | 4030011600 | S.CER C1608 JB 1E 104K-T | B | 34.6/71.4 |
| C426 | 4030011600 | S.CER C1608 JB 1E 104K-T | B | 34.8/67.7 |
| C427 | 4030011600 | S.CER C1608 JB 1E 104K-T | B | 26.8/62.8 |
| C428 | 4030011600 | S.CER C1608 JB 1E 104K-T | B | 20.8/62.8 |
| C429 | 4030011600 | S.CER C1608 JB 1E 104K-T | B | 18.2/62.8 |
| C430 | 4030011600 | S.CER C1608 JB 1E 104K-T | B | 9.7/81.5 |
| C431 | 4030011600 | S.CER C1608 JB 1E 104K-T | B | 12.3/72.4 |
| C432 | 4030011600 | S.CER C1608 JB 1E 104K-T | B | 12.3/79.0 |
| C433 | 4030011600 | S.CER C1608 JB 1E 104K-T | B | 12.3/82.3 |
| C434 | 4030011600 | S.CER C1608 JB 1E 104K-T | B | 17.2/90.2 |
| C435 | 4030011600 | S.CER C1608 JB 1E 104K-T | B | 20.8/90.2 |
| C436 | 4030011600 | S.CER C1608 JB 1E 104K-T | B | 25.8/90.2 |
| C437 | 4030011600 | S.CER C1608 JB 1E 104K-T | B | 146.2/21.3 |
| C438 | 4030011600 | S.CER C1608 JB 1E 104K-T | B | 152.7/21.3 |
| C439 | 4030011600 | S.CER C1608 JB 1E 104K-T | B | 153.0/18.4 |
| C440 | 4010008500 | CER DEBB33D102KA2B (DE0805B102K) | | |
| C601 | 4030011600 | S.CER C1608 JB 1E 104K-T | B | 169.5/51.4 |
| C602 | 4030011600 | S.CER C1608 JB 1E 104K-T | B | 169.2/57.7 |
| C603 | 4030011600 | S.CER C1608 JB 1E 104K-T | B | 79.6/44.8 |
| C604 | 4030011600 | S.CER C1608 JB 1E 104K-T | B | 99.9/36.8 |
| C605 | 4030011600 | S.CER C1608 JB 1E 104K-T | B | 102.1/21.3 |
| C606 | 4030011600 | S.CER C1608 JB 1E 104K-T | B | 83.3/16.9 |
| C607 | 4030011600 | S.CER C1608 JB 1E 104K-T | B | 81.6/16.9 |
| C608 | 4510008540 | S.ELE EEE1CA100SR | T | 67.1/16.4 |
| C609 | 4510008540 | S.ELE EEE1CA100SR | T | 62.5/34.0 |
| C610 | 4030006900 | S.CER C1608 JB 1H 103K-T | B | 71.3/19.5 |
| C611 | 4030006900 | S.CER C1608 JB 1H 103K-T | B | 71.3/20.8 |
| C612 | 4030007010 | S.CER C1608 CH 1H 100D-T | T | 81.0/16.9 |
| C613 | 4030007010 | S.CER C1608 CH 1H 100D-T | T | 83.6/16.9 |
| C614 | 4030011600 | S.CER C1608 JB 1E 104K-T | B | 86.3/14.3 |
| C615 | 4030006880 | S.CER C1608 JB 1H 472K-T | B | 71.3/31.2 |
| C616 | 4030006880 | S.CER C1608 JB 1H 472K-T | B | 71.3/29.9 |
| C617 | 4030006880 | S.CER C1608 JB 1H 472K-T | B | 71.3/28.6 |

## [LOGIC UNIT]

| REF NO. | PARTS NO. | DESCRIPTION | M. | H/V LOCATION |
|---|---|---|---|---|
| C618 | 4030006880 | S.CER C1608 JB 1H 472K-T | B | 71.3/27.3 |
| C619 | 4030006880 | S.CER C1608 JB 1H 472K-T | B | 71.3/26.0 |
| C620 | 4030006880 | S.CER C1608 JB 1H 472K-T | B | 71.3/24.7 |
| C621 | 4030006880 | S.CER C1608 JB 1H 472K-T | B | 71.3/23.4 |
| C622 | 4030006880 | S.CER C1608 JB 1H 472K-T | B | 71.3/22.1 |
| C623 | 4510008540 | S.ELE EEE1CA100SR | T | 178.6/62.5 |
| C624 | 4030011600 | S.CER C1608 JB 1E 104K-T | T | 174.9/60.7 |
| C625 | 4510008540 | S.ELE EEE1CA100SR | T | 184.7/62.5 |
| C626 | 4030011600 | S.CER C1608 JB 1E 104K-T | B | 63.7/20.3 |
| C627 | 4030011600 | S.CER C1608 JB 1E 104K-T | B | 60.0/20.3 |
| C628 | 4030011600 | S.CER C1608 JB 1E 104K-T | B | 73.6/39.0 |
| C629 | 4030011600 | S.CER C1608 JB 1E 104K-T | B | 57.3/39.9 |
| C630 | 4030011600 | S.CER C1608 JB 1E 104K-T | B | 150.9/51.7 |
| C631 | 4030011600 | S.CER C1608 JB 1E 104K-T | B | 149.0/48.2 |
| C632 | 4030011600 | S.CER C1608 JB 1E 104K-T | B | 131.9/66.0 |
| C633 | 4030011600 | S.CER C1608 JB 1E 104K-T | B | 138.2/66.8 |
| C634 | 4030011600 | S.CER C1608 JB 1E 104K-T | B | 150.9/58.0 |
| C635 | 4030011600 | S.CER C1608 JB 1E 104K-T | B | 131.1/58.5 |
| C636 | 4030011600 | S.CER C1608 JB 1E 104K-T | B | 131.1/52.1 |
| C801 | 4510008540 | S.ELE EEE1CA100SR | T | 141.0/114.6 |
| C802 | 4030011600 | S.CER C1608 JB 1E 104K-T | B | 138.5/110.7 |
| C803 | 4030011600 | S.CER C1608 JB 1E 104K-T | B | 138.5/113.3 |
| C804 | 4510008520 | S.ELE EEE1CA470SP | T | 147.2/113.8 |
| C805 | 4510008870 | S.ELE EEE1AA471UP | T | 100.2/110.4 |
| C806 | 4510008870 | S.ELE EEE1AA471UP | T | 109.5/110.4 |
| C807 | 4510008870 | S.ELE EEE1AA471UP | T | 119.4/100.6 |
| C808 | 4510008870 | S.ELE EEE1AA471UP | T | 120.0/109.6 |
| C809 | 4510008560 | S.ELE EEE1HAR47SR | T | 160.0/65.3 |
| C810 | 4510008560 | S.ELE EEE1HAR47SR | T | 166.6/65.3 |
| C811 | 4510008560 | S.ELE EEE1HAR47SR | T | 173.2/65.3 |
| C812 | 4030006860 | S.CER C1608 JB 1H 102K-T | B | 66.9/117.7 |
| C813 | 4030006860 | S.CER C1608 JB 1H 102K-T | B | 84.9/122.4 |
| C814 | 4030006860 | S.CER C1608 JB 1H 102K-T | B | 83.6/117.0 |
| C815 | 4030006860 | S.CER C1608 JB 1H 102K-T | T | 88.8/116.0 |
| C816 | 4030006860 | S.CER C1608 JB 1H 102K-T | B | 97.4/121.4 |
| C817 | 4030006860 | S.CER C1608 JB 1H 102K-T | B | 100.6/122.1 |
| C818 | 4030006860 | S.CER C1608 JB 1H 102K-T | B | 103.1/122.1 |
| C819 | 4030006860 | S.CER C1608 JB 1H 102K-T | B | 105.6/122.1 |
| C820 | 4030006860 | S.CER C1608 JB 1H 102K-T | B | 108.9/121.4 |
| C821 | 4510008520 | S.ELE EEE1CA470SP | T | 211.0/16.0 |
| C822 | 4510008500 | S.ELE EEE1CA101WP | T | 14.4/109.5 |
| C823 | 4030006880 | S.CER C1608 JB 1H 472K-T | B | 33.9/114.5 |
| C824 | 4030006860 | S.CER C1608 JB 1H 102K-T | T | 20.0/24.5 |
| C825 | 4030011600 | S.CER C1608 JB 1E 104K-T | B | 20.4/107.7 |
| C826 | 4030006860 | S.CER C1608 JB 1H 102K-T | T | 122.2/118.1 |
| C827 | 4030006860 | S.CER C1608 JB 1H 102K-T | T | 117.7/118.8 |
| C828 | 4030007130 | S.CER C1608 CH 1H 101J-T | T | 119.0/118.8 |
| C829 | 4030006860 | S.CER C1608 JB 1H 102K-T | T | 127.2/116.1 |
| C830 | 4030007130 | S.CER C1608 CH 1H 101J-T | T | 128.5/116.1 |
| C831 | 4030006860 | S.CER C1608 JB 1H 102K-T | T | 130.6/115.5 |
| C832 | 4030007130 | S.CER C1608 CH 1H 101J-T | T | 130.6/116.8 |
| C833 | 4030006860 | S.CER C1608 JB 1H 102K-T | T | 134.0/116.1 |
| C834 | 4030007130 | S.CER C1608 CH 1H 101J-T | T | 132.7/116.1 |
| C835 | 4030011600 | S.CER C1608 JB 1E 104K-T | T | 127.9/110.7 |
| C836 | 4510008540 | S.ELE EEE1CA100SR | T | 127.9/106.1 |
| C837 | 4030011600 | S.CER C1608 JB 1E 104K-T | T | 135.8/106.8 |
| C838 | 4510008540 | S.ELE EEE1CA100SR | T | 132.7/106.1 |
| C850 | 4030011600 | S.CER C1608 JB 1E 104K-T | B | 165.0/40.9 |
| C851 | 4510008540 | S.ELE EEE1CA100SR | T | 128.0/31.2 |
| C852 | 4030009490 | S.CER C1608 JB 1H 821K-T | B | 142.2/11.6 |
| C853 | 4030009490 | S.CER C1608 JB 1H 821K-T | B | 142.7/15.0 |
| C855 | 4510008540 | S.ELE EEE1CA100SR | T | 117.8/29.2 |
| C856 | 4030009490 | S.CER C1608 JB 1H 821K-T | B | 134.6/17.2 |
| C857 | 4030009490 | S.CER C1608 JB 1H 821K-T | B | 131.8/19.8 |
| C859 | 4510008540 | S.ELE EEE1CA100SR | T | 123.2/29.2 |
| C860 | 4030009490 | S.CER C1608 JB 1H 821K-T | B | 136.9/7.3 |
| C861 | 4030009490 | S.CER C1608 JB 1H 821K-T | B | 140.8/7.3 |
| C865 | 4510008540 | S.ELE EEE1CA100SR | T | 119.4/22.3 |
| C866 | 4030007160 | S.CER C1608 CH 1H 181J-T | B | 121.1/5.0 |
| C867 | 4030009880 | S.CER C1608 JB 1H 682K-T | T | 115.2/18.0 |
| C868 | 4030008880 | S.CER C1608 JB 1H 223K-T | T | 115.2/15.4 |
| C869 | 4510008540 | S.ELE EEE1CA100SR | T | 109.5/16.3 |
| C871 | 4510008540 | S.ELE EEE1CA100SR | T | 104.7/16.3 |
| C873 | 4030011600 | S.CER C1608 JB 1E 104K-T | B | 120.5/8.4 |
| C874 | 4030011600 | S.CER C1608 JB 1E 104K-T | B | 109.0/10.8 |
| C875 | 4510008540 | S.ELE EEE1CA100SR | T | 114.6/22.3 |
| C876 | 4510008540 | S.ELE EEE1CA100SR | T | 119.1/16.3 |
| C877 | 4030011600 | S.CER C1608 JB 1E 104K-T | B | 137.4/18.5 |
| C878 | 4030011600 | S.CER C1608 JB 1E 104K-T | B | 134.3/7.3 |
| C879 | 4510008540 | S.ELE EEE1CA100SR | T | 124.2/22.3 |
| C880 | 4510008540 | S.ELE EEE1CA100SR | T | 124.2/16.3 |
| C883 | 4510008560 | S.ELE EEE1HAR47SR | T | 184.7/67.3 |
| C884 | 4510008560 | S.ELE EEE1HAR47SR | T | 180.1/71.2 |
| C901 | 4510008540 | S.ELE EEE1CA100SR | T | 183.8/51.0 |
| C902 | 4510008540 | S.ELE EEE1CA100SR | T | 189.0/51.0 |
| C903 | 4030011600 | S.CER C1608 JB 1E 104K-T | B | 186.4/50.2 |
| C904 | 4030011600 | S.CER C1608 JB 1E 104K-T | B | 193.8/57.6 |
| C905 | 4510008540 | S.ELE EEE1CA100SR | T | 189.0/57.1 |
| C906 | 4510008540 | S.ELE EEE1CA100SR | T | 183.8/57.1 |
| C907 | 4030006860 | S.CER C1608 JB 1H 102K-T | B | 170.6/40.4 |
| C908 | 4030006860 | S.CER C1608 JB 1H 102K-T | B | 171.6/37.8 |
| C909 | 4030006860 | S.CER C1608 JB 1H 102K-T | B | 173.6/37.8 |
| C910 | 4030006860 | S.CER C1608 JB 1H 102K-T | B | 175.1/28.3 |
| C911 | 4030006860 | S.CER C1608 JB 1H 102K-T | B | 176.1/30.9 |
| C912 | 4030006860 | S.CER C1608 JB 1H 102K-T | B | 177.6/37.8 |
| C913 | 4030006860 | S.CER C1608 JB 1H 102K-T | B | 178.6/40.3 |
| C914 | 4030006860 | S.CER C1608 JB 1H 102K-T | B | 179.6/37.8 |
| C915 | 4030006860 | S.CER C1608 JB 1H 102K-T | B | 180.1/30.9 |
| C916 | 4030006860 | S.CER C1608 JB 1H 102K-T | B | 180.6/40.3 |
| C917 | 4030006860 | S.CER C1608 JB 1H 102K-T | B | 181.1/28.3 |
| C918 | 4030006860 | S.CER C1608 JB 1H 102K-T | B | 182.1/30.9 |
| C919 | 4030006860 | S.CER C1608 JB 1H 102K-T | B | 182.6/40.3 |
| C920 | 4030006860 | S.CER C1608 JB 1H 102K-T | B | 183.1/28.3 |
| C921 | 4030006860 | S.CER C1608 JB 1H 102K-T | B | 183.6/37.8 |
| C922 | 4030006860 | S.CER C1608 JB 1H 102K-T | B | 184.1/30.9 |

Eqv.= This component is equivalent to the REF No. component listed above, and may be substituted on parts orders and repairs.

M.=Mounted side (T: Mounted on the Top side, B: Mounted on the Bottom side)
S.=Surface mount

## [LOGIC UNIT]

| REF NO. | PARTS NO. | DESCRIPTION | M. | H/V LOCATION |
|---|---|---|---|---|
| C923 | 4030006860 | S.CER C1608 JB 1H 102K-T | B | 133.7/37.8 |
| C924 | 4030006860 | S.CER C1608 JB 1H 102K-T | B | 134.7/40.4 |
| C925 | 4030006860 | S.CER C1608 JB 1H 102K-T | B | 135.7/37.8 |
| C926 | 4030006860 | S.CER C1608 JB 1H 102K-T | B | 136.2/30.9 |
| C927 | 4030006860 | S.CER C1608 JB 1H 102K-T | B | 136.7/40.4 |
| C928 | 4030006860 | S.CER C1608 JB 1H 102K-T | B | 137.2/25.5 |
| C929 | 4030006860 | S.CER C1608 JB 1H 102K-T | B | 137.7/37.8 |
| C930 | 4030006860 | S.CER C1608 JB 1H 102K-T | B | 138.2/28.1 |
| C931 | 4030006860 | S.CER C1608 JB 1H 102K-T | B | 138.7/40.4 |
| C932 | 4030006860 | S.CER C1608 JB 1H 102K-T | B | 139.2/25.5 |
| C933 | 4030006860 | S.CER C1608 JB 1H 102K-T | B | 139.7/37.8 |
| C934 | 4030006860 | S.CER C1608 JB 1H 102K-T | B | 140.2/28.1 |
| C935 | 4030006860 | S.CER C1608 JB 1H 102K-T | B | 140.7/40.4 |
| C936 | 4030006860 | S.CER C1608 JB 1H 102K-T | B | 141.2/25.5 |
| C937 | 4030006860 | S.CER C1608 JB 1H 102K-T | B | 141.7/37.8 |
| C938 | 4030006860 | S.CER C1608 JB 1H 102K-T | B | 142.2/22.9 |
| C939 | 4030006860 | S.CER C1608 JB 1H 102K-T | B | 142.7/40.4 |
| C940 | 4030006860 | S.CER C1608 JB 1H 102K-T | B | 143.2/25.5 |
| C941 | 4030006860 | S.CER C1608 JB 1H 102K-T | B | 144.2/22.9 |
| C942 | 4030006860 | S.CER C1608 JB 1H 102K-T | B | 146.2/30.9 |
| C943 | 4030006860 | S.CER C1608 JB 1H 102K-T | B | 147.2/28.3 |
| C944 | 4030006860 | S.CER C1608 JB 1H 102K-T | B | 148.2/30.9 |
| C945 | 4030006860 | S.CER C1608 JB 1H 102K-T | B | 150.2/28.3 |
| C946 | 4030006860 | S.CER C1608 JB 1H 102K-T | B | 151.2/30.9 |
| C947 | 4030006860 | S.CER C1608 JB 1H 102K-T | B | 214.5/84.7 |
| C948 | 4030006860 | S.CER C1608 JB 1H 102K-T | B | 220.7/81.7 |
| C949 | 4030006860 | S.CER C1608 JB 1H 102K-T | B | 223.0/91.8 |
| C950 | 4030006860 | S.CER C1608 JB 1H 102K-T | B | 220.7/94.3 |
| C951 | 4030006860 | S.CER C1608 JB 1H 102K-T | B | 214.5/92.7 |
| C952 | 4030006860 | S.CER C1608 JB 1H 102K-T | B | 213.6/72.3 |
| C953 | 4030006860 | S.CER C1608 JB 1H 102K-T | B | 211.6/76.2 |
| C954 | 4030006860 | S.CER C1608 JB 1H 102K-T | B | 205.7/77.9 |
| C955 | 4030006860 | S.CER C1608 JB 1H 102K-T | B | 211.6/79.6 |
| C956 | 4030006860 | S.CER C1608 JB 1H 102K-T | T | 21.0/113.9 |
| C957 | 4030006860 | S.CER C1608 JB 1H 102K-T | T | 24.0/113.9 |
| C958 | 4030006860 | S.CER C1608 JB 1H 102K-T | T | 27.0/113.9 |
| C959 | 4030006860 | S.CER C1608 JB 1H 102K-T | T | 30.0/113.9 |
| C960 | 4030006860 | S.CER C1608 JB 1H 102K-T | B | 180.6/79.6 |
| C961 | 4030006860 | S.CER C1608 JB 1H 102K-T | B | 183.3/90.3 |
| C962 | 4030006860 | S.CER C1608 JB 1H 102K-T | B | 187.8/90.3 |
| C963 | 4030006860 | S.CER C1608 JB 1H 102K-T | B | 188.8/81.7 |
| C964 | 4030006860 | S.CER C1608 JB 1H 102K-T | B | 193.0/81.7 |
| C965 | 4030006860 | S.CER C1608 JB 1H 102K-T | B | 193.8/90.3 |
| C966 | 4030006860 | S.CER C1608 JB 1H 102K-T | B | 194.9/78.9 |
| C967 | 4030006860 | S.CER C1608 JB 1H 102K-T | B | 222.8/78.7 |
| C968 | 4030006860 | S.CER C1608 JB 1H 102K-T | B | 228.7/79.0 |
| C969 | 4030006860 | S.CER C1608 JB 1H 102K-T | B | 222.0/74.4 |
| C970 | 4030006860 | S.CER C1608 JB 1H 102K-T | B | 230.0/74.4 |
| C971 | 4030006860 | S.CER C1608 JB 1H 102K-T | B | 220.9/49.3 |
| C972 | 4030006860 | S.CER C1608 JB 1H 102K-T | B | 229.5/50.3 |
| C973 | 4030006860 | S.CER C1608 JB 1H 102K-T | B | 227.1/62.3 |
| C974 | 4030006860 | S.CER C1608 JB 1H 102K-T | B | 218.5/63.3 |
| C975 | 4030006860 | S.CER C1608 JB 1H 102K-T | B | 227.1/66.8 |
| C976 | 4030006860 | S.CER C1608 JB 1H 102K-T | B | 218.5/68.1 |
| C977 | 4030006860 | S.CER C1608 JB 1H 102K-T | T | 181.8/24.0 |
| C978 | 4030006860 | S.CER C1608 JB 1H 102K-T | T | 159.5/23.7 |
| C979 | 4030006860 | S.CER C1608 JB 1H 102K-T | T | 190.4/18.9 |
| C980 | 4030006860 | S.CER C1608 JB 1H 102K-T | T | 188.8/24.6 |
| C981 | 4030006860 | S.CER C1608 JB 1H 102K-T | T | 166.2/22.6 |
| C982 | 4030006860 | S.CER C1608 JB 1H 102K-T | T | 173.4/42.7 |
| C983 | 4030011600 | S.CER C1608 JB 1E 104K-T | T | 180.8/84.4 |
| C984 | 4030010210 | S.CER C3216 JB 1C 105M-T | B | 198.6/85.6 |
| C985 | 4030011600 | S.CER C1608 JB 1E 104K-T | T | 195.5/83.6 |
| C991 | 4030006880 | S.CER C1608 JB 1H 472K-T | T | 208.4/92.0 |
| C992 | 4030006880 | S.CER C1608 JB 1H 472K-T | T | 208.4/94.0 |
| C993 | 4030006880 | S.CER C1608 JB 1H 472K-T | T | 220.2/93.0 |
| C994 | 4030006880 | S.CER C1608 JB 1H 472K-T | T | 220.2/81.5 |
| C995 | 4030006880 | S.CER C1608 JB 1H 472K-T | T | 208.4/80.0 |
| C996 | 4030006880 | S.CER C1608 JB 1H 472K-T | T | 220.2/78.6 |
| C997 | 4030006880 | S.CER C1608 JB 1H 472K-T | T | 218.4/73.2 |
| J1 | 6510022491 | S.CON AXK5S30047YG | T | 40.0/98.0 |
| J2 | 6510019871 | S.CON AXK5S40047YG | T | 85.0/98.0 |
| J51 | 6910014251 | CON IMSA-9202B-2-06Z041-PT1 | | |
| J102 | 6510019981 | S.CON 52808-1671(1690) | T | 72.5/40.0 |
| J602 | 6510019971 | S.CON 52808-1071 | T | 95.5/14.5 |
| J604 | 6510019971 | S.CON 52808-1071 | T | 72.5/23.0 |
| J802 | 6510024261 | S.CON S9B-PH-SM4-TB(LF)(SN) | T | 158.5/5.0 |
| J803 | 6510024401 | CON S11B-EH(LF)(SN) | | |
| J804 | 6510024251 | S.CON S5B-PH-SM4-TB(LF)(SN) | T | 213.2/5.0 |
| J805 | 6510024111 | S.CON 52793-2070 (2090) | T | 129.6/123.9 |
| J806 | 6510024131 | S.CON IMSA-9637S-40Y905 | T | 193.1/4.7 |
| J807 | 6510024151 | S.CON 50FY-BMT-TB(LF)(SN) | T | 53.6/22.0 |
| J808 | 6510022472 | S.CON 40FLT-SM2-TB(LF)(SN)(M) | T | 175.4/34.3 |
| J809 | 6510022472 | S.CON 40FLT-SM2-TB(LF)(SN)(M) | T | 143.5/34.3 |
| J810 | 6510022731 | S.CON S13B-PH-SM4-TB(LF)(SN) | T | 120.0/7.0 |
| J811 | 6510021561 | S.CON 52808-2470 (2490) | T | 214.3/84.5 |
| J812 | 6510020701 | S.CON 52793-1270 (1290) | T | 19.5/123.9 |
| J813 | 6510020081 | S.CON 52808-2071(2090) | T | 189.0/89.8 |
| J814 | 6510019971 | S.CON 52808-1071 | T | 229.0/79.5 |
| J815 | 6510019991 | S.CON 52808-2271(2291) | T | 229.0/58.0 |
| J816 | 6510019991 | S.CON 52808-2271(2291) | T | 171.2/17.5 |
| J820 | 6510003581 | CON S10B-EH-S(LF)(SN) | | |
| J821 | 6510003551 | CON S07B-EH-S(LF)(SN) | | |
| J822 | 6510021601 | S.CON S2B-PH-SM4-TB(LF)(SN) | T | 15.5/18.0 |
| J823 | 6510021601 | S.CON S2B-PH-SM4-TB(LF)(SN) | T | 53.8/122.6 |
| J824 | 6510024100 | CON SC25-02WL | | |
| J825 | 6510019421 | S.CON B8B-ZR-SM4-TF(LF)(SN) | T | 29.4/20.8 |
| J826 | 6510023801 | S.CON S4B-ZR-SM4A-TF(LF)(SN) | T | 141.3/4.5 |
| DS401 | 5040002930 | S.LED SML-512MW T86 | T | 11.9/96.5 |
| DS402 | 5040002930 | S.LED SML-512MW T86 | T | 11.9/94.9 |
| DS403 | 5040002930 | S.LED SML-512MW T86 | T | 11.9/93.2 |

## [LOGIC UNIT]

| REF NO. | PARTS NO. | DESCRIPTION | M. | H/V LOCATION |
|---|---|---|---|---|
| S51 | 2260001890 | S.SWI SKQDPA | T | 142.7/106.9 |
| T401 | 5920000841 | S.TRA H1102NL <QUA> | T | 150.0/20.0 |
| EP101 | 6910013310 | S.BEA MMZ1608D121B | T | 3.6/75.0 |
| EP102 | 6910013310 | S.BEA MMZ1608D121B | T | 10.4/80.5 |
| EP103 | 6910013310 | S.BEA MMZ1608D121B | T | 14.9/80.7 |
| EP201 | 6910012350 | S.BEA MMZ1608Y 102BT | T | 201.6/22.2 |
| EP202 | 6910012350 | S.BEA MMZ1608Y 102BT | T | 198.4/28.0 |
| EP203 | 6910012350 | S.BEA MMZ1608Y 102BT | T | 83.8/86.4 |
| EP204 | 6910012350 | S.BEA MMZ1608Y 102BT | T | 79.7/72.5 |
| EP401 | 6910013310 | S.BEA MMZ1608D121B | T | 19.4/79.7 |
| EP402 | 6910013310 | S.BEA MMZ1608D121B | T | 17.3/75.6 |
| EP403 | 6910013310 | S.BEA MMZ1608D121B | T | 19.4/82.5 |
| EP801 | 6910013310 | S.BEA MMZ1608D121B | T | 204.5/9.9 |
| EP802 | 6910013310 | S.BEA MMZ1608D121B | T | 202.2/10.6 |
| EP803 | 6910013310 | S.BEA MMZ1608D121B | T | 200.9/10.6 |
| EP804 | 6910013310 | S.BEA MMZ1608D121B | T | 199.6/10.6 |
| EP805 | 6910013310 | S.BEA MMZ1608D121B | B | 201.4/8.3 |
| EP806 | 6910013310 | S.BEA MMZ1608D121B | T | 198.3/10.6 |
| EP807 | 6910013310 | S.BEA MMZ1608D121B | B | 200.1/8.3 |
| EP808 | 6910013310 | S.BEA MMZ1608D121B | T | 197.0/10.6 |
| EP809 | 6910013310 | S.BEA MMZ1608D121B | B | 198.8/8.3 |
| EP810 | 6910013310 | S.BEA MMZ1608D121B | T | 195.7/10.6 |
| EP811 | 6910013310 | S.BEA MMZ1608D121B | B | 197.5/8.3 |
| EP812 | 6910013310 | S.BEA MMZ1608D121B | B | 196.2/8.3 |
| EP813 | 6910013310 | S.BEA MMZ1608D121B | T | 194.4/10.6 |
| EP814 | 6910013310 | S.BEA MMZ1608D121B | T | 193.0/10.6 |
| EP815 | 6910013310 | S.BEA MMZ1608D121B | T | 191.7/10.9 |
| EP816 | 6910013310 | S.BEA MMZ1608D121B | T | 190.4/11.6 |
| EP817 | 6910013310 | S.BEA MMZ1608D121B | T | 189.1/12.3 |
| EP818 | 6910013310 | S.BEA MMZ1608D121B | T | 187.8/12.0 |
| EP819 | 6910013310 | S.BEA MMZ1608D121B | T | 186.5/11.6 |
| EP820 | 6910013310 | S.BEA MMZ1608D121B | T | 183.6/10.0 |
| EP821 | 6910015980 | S.BEA MMZ1608S 181CT-AS | T | 71.1/116.6 |
| EP822 | 6910015980 | S.BEA MMZ1608S 181CT-AS | T | 72.5/116.6 |
| EP826 | 6910012350 | S.BEA MMZ1608Y 102BT | T | 133.2/118.1 |
| EP827 | 6910012350 | S.BEA MMZ1608Y 102BT | B | 137.3/124.5 |
| EP828 | 6910012350 | S.BEA MMZ1608Y 102BT | B | 137.3/123.1 |
| EP829 | 6910012350 | S.BEA MMZ1608Y 102BT | T | 135.3/117.4 |
| EP972 | 6910015970 | S.BEA MMZ1608B 301CT-AS | T | 139.1/11.2 |
| EP973 | 6910015970 | S.BEA MMZ1608B 301CT-AS | T | 142.1/11.2 |
| EP996 | 6910015970 | S.BEA MMZ1608B 301CT-AS | B | 188.5/92.2 |
| EP997 | 6910015970 | S.BEA MMZ1608B 301CT-AS | B | 189.5/83.6 |
| EP1001 | 6910015970 | S.BEA MMZ1608B 301CT-AS | B | 193.5/83.6 |
| EP1002 | 6910015970 | S.BEA MMZ1608B 301CT-AS | B | 194.5/92.2 |
| EP1101 | 6910013310 | S.BEA MMZ1608D121B | T | 39.4/13.9 |
| EP1102 | 6910013310 | S.BEA MMZ1608D121B | T | 40.1/16.6 |
| EP1103 | 6910013310 | S.BEA MMZ1608D121B | T | 40.8/13.9 |
| EP1104 | 6910013310 | S.BEA MMZ1608D121B | T | 41.5/16.6 |
| EP1105 | 6910013310 | S.BEA MMZ1608D121B | T | 42.2/13.9 |
| EP1106 | 6910013310 | S.BEA MMZ1608D121B | T | 42.9/16.6 |
| EP1107 | 6910013310 | S.BEA MMZ1608D121B | T | 43.6/13.9 |
| EP1108 | 6910013310 | S.BEA MMZ1608D121B | T | 44.3/16.6 |
| EP1109 | 6910013310 | S.BEA MMZ1608D121B | T | 45.0/13.9 |
| EP1110 | 6910013310 | S.BEA MMZ1608D121B | T | 45.7/16.6 |
| EP1111 | 6910013310 | S.BEA MMZ1608D121B | T | 46.4/13.9 |
| EP1112 | 6910013310 | S.BEA MMZ1608D121B | T | 47.1/16.6 |
| EP1113 | 6910013310 | S.BEA MMZ1608D121B | T | 47.8/13.9 |
| EP1114 | 6910013310 | S.BEA MMZ1608D121B | T | 48.5/16.6 |
| EP1115 | 6910013310 | S.BEA MMZ1608D121B | T | 49.2/13.9 |
| EP1116 | 6910013310 | S.BEA MMZ1608D121B | T | 49.9/16.6 |
| EP1117 | 6910013310 | S.BEA MMZ1608D121B | T | 50.6/13.9 |
| EP1118 | 6910013310 | S.BEA MMZ1608D121B | T | 51.3/16.6 |
| EP1119 | 6910013310 | S.BEA MMZ1608D121B | T | 52.0/13.9 |
| EP1120 | 6910013310 | S.BEA MMZ1608D121B | T | 52.7/16.6 |
| EP1121 | 6910013310 | S.BEA MMZ1608D121B | T | 53.4/13.9 |
| EP1122 | 6910013310 | S.BEA MMZ1608D121B | T | 54.1/16.6 |
| EP1123 | 6910013310 | S.BEA MMZ1608D121B | T | 54.8/13.9 |
| EP1124 | 6910013310 | S.BEA MMZ1608D121B | T | 42.8/29.6 |
| EP1125 | 6910013310 | S.BEA MMZ1608D121B | T | 43.5/27.0 |
| EP1126 | 6910013310 | S.BEA MMZ1608D121B | T | 44.2/29.6 |
| EP1127 | 6910013310 | S.BEA MMZ1608D121B | T | 44.9/27.0 |
| EP1128 | 6910013310 | S.BEA MMZ1608D121B | T | 45.6/29.6 |
| EP1129 | 6910013310 | S.BEA MMZ1608D121B | T | 46.3/27.0 |
| EP1130 | 6910013310 | S.BEA MMZ1608D121B | T | 47.0/29.6 |
| EP1131 | 6910013310 | S.BEA MMZ1608D121B | T | 47.7/27.0 |
| EP1132 | 6910013310 | S.BEA MMZ1608D121B | T | 48.4/29.6 |
| EP1133 | 6910013310 | S.BEA MMZ1608D121B | T | 49.1/27.0 |
| EP1134 | 6910013310 | S.BEA MMZ1608D121B | T | 49.8/29.6 |
| EP1135 | 6910013310 | S.BEA MMZ1608D121B | T | 50.5/27.0 |
| EP1136 | 6910013310 | S.BEA MMZ1608D121B | T | 51.2/29.6 |
| EP1137 | 6910013310 | S.BEA MMZ1608D121B | T | 51.9/27.0 |
| EP1138 | 6910013310 | S.BEA MMZ1608D121B | T | 52.6/29.6 |
| EP1139 | 6910013310 | S.BEA MMZ1608D121B | T | 53.3/27.0 |
| EP1140 | 6910013310 | S.BEA MMZ1608D121B | T | 54.0/29.6 |
| EP1141 | 6910013310 | S.BEA MMZ1608D121B | T | 54.7/27.0 |
| EP1142 | 6910013310 | S.BEA MMZ1608D121B | T | 55.4/29.6 |
| EP1143 | 6910013310 | S.BEA MMZ1608D121B | T | 56.1/27.0 |
| EP1144 | 6910013310 | S.BEA MMZ1608D121B | T | 56.8/29.6 |
| EP1145 | 6910013310 | S.BEA MMZ1608D121B | T | 57.5/27.0 |
| EP1146 | 6910013310 | S.BEA MMZ1608D121B | T | 58.2/29.6 |

Eqv.= This component is equivalent to the REF No. component listed above, and may be substituted on parts orders and repairs.

M.=Mounted side (T: Mounted on the Top side, B: Mounted on the Bottom side)
S.=Surface mount

## [PA200W UNIT]

| REF NO. | PARTS NO. | DESCRIPTION | | M. | H/V LOCATION |
|---|---|---|---|---|---|
| IC2 | 1180001541 | S.IC | TA78L08F(TE12LF) | T | 58.8/15.1 |
| Q1 | 1520000860 | S.TRA | 2SB1302S-TD-E | T | 42.8/19.2 |
| Q2 | 1590000680 | S.TRA | DTC114EUA T106 | T | 45.8/13.5 |
| Q101 | 1560001241 | S.FET | RD01MUS1-T113 | T | 5.9/66.4 |
| Q201 | 1590003051 | S.FET | PD55003-E | T | 20.5/53.1 |
| Q301 | 1590003350 | FET | SD2918 | | |
| Q401 | 1590003361 | FET | SD2931-12 | | |
| Q402 | 1590003361 | FET | SD2931-12 | | |
| D1 | 1730000561 | S.ZEN | RD2.7M-T2B-A B1 | T | 100.6/22.9 |
| D401 | 1750000271 | S.DIO | 1SS301(TE85LF) | T | 116.8/99.1 |
| D402 | 1750000271 | S.DIO | 1SS301(TE85LF) | T | 118.3/35.9 |
| D403 | 1750000271 | S.DIO | 1SS301(TE85LF) | T | 104.0/98.3 |
| D404 | 1750000271 | S.DIO | 1SS301(TE85LF) | T | 104.0/35.7 |
| L2 | 6200005011 | S.COI | NLV25T-100J | B | 4.7/40.0 |
| L3 | 6200005011 | S.COI | NLV25T-100J | B | 4.6/48.0 |
| L6 | 6200005011 | S.COI | NLV25T-100J | T | 109.3/91.1 |
| L7 | 6200010881 | S.COI | CDRH124NP-330MCI | T | 77.3/11.0 |
| L101 | 6200005131 | S.COI | NLC453232T-101K-PF | T | 5.6/59.6 |
| L102 | 6200007220 | S.COI | EXCCL4532U1 | T | 6.0/38.4 |
| L201 | 6180001240 | COI | LAL 04NA 820K | | |
| L202 | 6140004350 | COI | LR-475 | | |
| L301 | 6200003261 | S.COI | NLV32T-101J | T | 46.1/36.4 |
| L303 | 6200001831 | S.COI | NLV32T-100J | T | 87.0/26.2 |
| L304 | 2040000490 | COI | EXC-ELDR25C | | |
| L305 | 2040000490 | COI | EXC-ELDR25C | | |
| L306 | 6140004340 | COI | LR-474 | | |
| L307 | 6200001831 | S.COI | NLV32T-100J | T | 75.7/100.2 |
| L401 | 6200003261 | S.COI | NLV32T-101J | T | 100.4/98.3 |
| L402 | 6200003261 | S.COI | NLV32T-101J | T | 100.1/35.8 |
| L403 | 6140002590 | COI | LR-296 (TR18X8X8 D12A) | | |
| L404 | 6140000720 | COI | LR-95 | | |
| L501 | 6140002030 | COI | LR-230 (SK-10M-15Y 120) | | |
| R1 | 7030003440 | S.RES | ERJ3GEYJ 102 V (1K) | T | 42.8/12.8 |
| R2 | 7030003560 | S.RES | ERJ3GEYJ 103 V (10K) | T | 42.8/14.2 |
| R3 | 7510001740 | THE | DTN-C103F3H-STS-40 | | |
| R4 | 7030000380 | S.RES | MCR10EZHJ 1 K (102) | T | 39.7/22.5 |
| R5 | 7030008061 | S.RES | ERA3YED 222V (2.2K) | T | 104.3/23.1 |
| R6 | 7030007210 | S.RES | ERA3YEB 102V (1K) | T | 103.6/16.5 |
| R7 | 7030007210 | S.RES | ERA3YEB 102V (1K) | T | 103.6/17.8 |
| R101 | 7030003370 | S.RES | ERJ3GEYJ 271 V (270) | T | 6.0/87.2 |
| R102 | 7030003220 | S.RES | ERJ3GEYJ 150 V (15) | T | 3.9/86.1 |
| R103 | 7030003370 | S.RES | ERJ3GEYJ 271 V (270) | T | 6.0/85.0 |
| R104 | 7030003360 | S.RES | ERJ3GEYJ 221 V (220) | T | 4.8/71.3 |
| R105 | 7030003430 | S.RES | ERJ3GEYJ 821 V (820) | T | 6.0/73.3 |
| R106 | 7030003480 | S.RES | ERJ3GEYJ 222 V (2.2K) | T | 9.2/73.8 |
| R107 | 7030003440 | S.RES | ERJ3GEYJ 102 V (1K) | T | 2.2/64.7 |
| R108 | 7030003200 | S.RES | ERJ3GEYJ 100 V (10) | T | 9.2/68.3 |
| R110 | 7030000230 | S.RES | MCR10EZHJ 56 (560) | T | 11.3/56.6 |
| R111 | 7030003420 | S.RES | ERJ3GEYJ 681 V (680) | T | 13.4/58.7 |
| R112 | 7030003510 | S.RES | ERJ3GEYJ 392 V (3.9K) | T | 12.6/60.6 |
| R113 | 7030003500 | S.RES | ERJ3GEYJ 332 V (3.3K) | T | 6.8/75.2 |
| R115 | 7030003520 | S.RES | ERJ3GEYJ 472 V (4.7K) | T | 13.1/40.8 |
| R117 | 7030003530 | S.RES | ERJ3GEYJ 562 V (5.6K) | T | 7.7/76.5 |
| R118 | 7030003550 | S.RES | ERJ3GEYJ 822 V (8.2K) | T | 11.7/40.8 |
| R119 | 7030008240 | S.RES | ERJ12Y0R00U | T | 5.0/49.6 |
| R201 | 7030004050 | S.RES | ERJ3GEYJ 1R0 V (1) | T | 13.8/48.6 |
| R202 | 7030003410 | S.RES | ERJ3GEYJ 561 V (560) | T | 23.1/43.1 |
| R203 | 7030010800 | S.RES | ERJ1TYJ 2R7U (2.7) | T | 18.4/65.5 |
| R205 | 7030006260 | S.RES | ERJ12YJ471U (470) | T | 30.3/55.7 |
| R301 | 7310005210 | TRI | VM5CK-PVB 20K | | |
| R302 | 7030008180 | S.RES | ERJ12YJ331U (330) | T | 48.3/40.6 |
| R305 | 7030003530 | S.RES | ERJ3GEYJ 562 V (5.6K) | T | 49.6/43.5 |
| R307 | 7070000830 | RES | ERG3SJ 101 (100) | | |
| R309 | 7030010570 | S.RES | ERJ1TYJ 4R7U (4.7) | T | 80.0/45.8 |
| R310 | 7310005200 | TRI | VM5CK-PVB 2K | | |
| R312 | 7070000830 | RES | ERG3SJ 101 (100) | | |
| R401 | 7030010960 | S.RES | ERJ1TYJ 120U (12) | T | 89.8/90.7 |
| R402 | 7030010960 | S.RES | ERJ1TYJ 120U (12) | T | 93.5/90.7 |
| R403 | 7030010960 | S.RES | ERJ1TYJ 120U (12) | T | 97.2/90.7 |
| R404 | 7030010960 | S.RES | ERJ1TYJ 120U (12) | T | 90.9/43.3 |
| R405 | 7030010960 | S.RES | ERJ1TYJ 120U (12) | T | 94.6/43.3 |
| R406 | 7030010960 | S.RES | ERJ1TYJ 120U (12) | T | 98.3/43.3 |
| R407 | 7310005230 | TRI | VM5CK-PVB 10K | | |
| R408 | 7030000420 | S.RES | MCR10EZHJ 2.2K (222) | T | 116.3/96.0 |
| R409 | 7030000420 | S.RES | MCR10EZHJ 2.2K (222) | T | 116.3/38.0 |
| R410 | 7310005230 | TRI | VM5CK-PVB 10K | | |
| R411 | 7030010520 | S.RES | ERJ1TYJ 101U (100) | T | 107.6/93.9 |
| R412 | 7030010520 | S.RES | ERJ1TYJ 101U (100) | T | 107.6/40.2 |
| R413 | 7030010520 | S.RES | ERJ1TYJ 101U (100) | T | 111.3/93.9 |
| R414 | 7030010520 | S.RES | ERJ1TYJ 101U (100) | T | 111.3/40.2 |
| R416 | 7070000890 | RES | ERG3SJ 150 (15) | | |
| R418 | 7070001190 | RES | ERG3SJ180 (18) | | |
| R420 | 7070000890 | RES | ERG3SJ 150 (15) | | |
| R422 | 7070001190 | RES | ERG3SJ180 (18) | | |
| R423 | 7030003460 | S.RES | ERJ3GEYJ 152 V (1.5K) | T | 95.9/98.4 |
| R424 | 7030003460 | S.RES | ERJ3GEYJ 152 V (1.5K) | T | 99.4/33.7 |
| R425 | 7310005200 | TRI | VM5CK-PVB 2K | | |
| R426 | 7310005200 | TRI | VM5CK-PVB 2K | | |
| R427 | 7070001200 | RES | ERG3SJ100P (10) | | |
| R501 | 7070000890 | RES | ERG3SJ 150 (15) | | |
| R502 | 7070000890 | RES | ERG3SJ 150 (15) | | |
| R503 | 7030003500 | S.RES | ERJ3GEYJ 332 V (3.3K) | T | 171.8/16.7 |
| R504 | 7030003500 | S.RES | ERJ3GEYJ 332 V (3.3K) | T | 169.9/15.9 |
| R507 | 7030003500 | S.RES | ERJ3GEYJ 332 V (3.3K) | T | 139.1/17.9 |
| R508 | 7030003500 | S.RES | ERJ3GEYJ 332 V (3.3K) | T | 137.3/19.2 |
| R511 | 7070000890 | RES | ERG3SJ 150 (15) | | |
| R512 | 7070000890 | RES | ERG3SJ 150 (15) | | |

## [PA200W UNIT]

| REF NO. | PARTS NO. | DESCRIPTION | | M. | H/V LOCATION |
|---|---|---|---|---|---|
| R513 | 7070001000 | RES | ERG3SJ 821 (820) | | |
| R514 | 7070001000 | RES | ERG3SJ 821 (820) | | |
| R521 | 7030011160 | S.RES | RL7520WT-R010-F | T | 165.3/20.2 |
| R522 | 7030011160 | S.RES | RL7520WT-R010-F | T | 159.7/20.2 |
| R523 | 7030011160 | S.RES | RL7520WT-R010-F | T | 154.1/20.2 |
| C1 | 4030011600 | S.CER | C1608 JB 1E 104K-T | T | 18.9/18.0 |
| C2 | 4030006880 | S.CER | C1608 JB 1H 472K-T | T | 18.9/20.5 |
| C3 | 4030006880 | S.CER | C1608 JB 1H 472K-T | T | 18.9/23.0 |
| C6 | 4030006880 | S.CER | C1608 JB 1H 472K-T | T | 18.9/25.5 |
| C7 | 4030006900 | S.CER | C1608 JB 1H 103K-T | T | 70.0/6.8 |
| C8 | 4030006880 | S.CER | C1608 JB 1H 472K-T | T | 42.8/15.6 |
| C9 | 4030011600 | S.CER | C1608 JB 1E 104K-T | T | 57.6/11.4 |
| C10 | 4510008520 | S.ELE | EEE1CA470SP | T | 52.0/15.5 |
| C11 | 4030006900 | S.CER | C1608 JB 1H 103K-T | T | 60.4/11.4 |
| C12 | 4510008520 | S.ELE | EEE1CA470SP | T | 64.9/15.5 |
| C15 | 4030006880 | S.CER | C1608 JB 1H 472K-T | T | 104.3/20.4 |
| C16 | 4030006880 | S.CER | C1608 JB 1H 472K-T | T | 103.0/23.1 |
| C17 | 4510008550 | S.ELE | EEE1HA010SR | T | 95.9/22.8 |
| C102 | 4030017810 | S.CER | C1608 CH 1H 102J-T | T | 4.1/76.2 |
| C103 | 4030011600 | S.CER | C1608 JB 1E 104K-T | T | 9.2/72.5 |
| C104 | 4030011600 | S.CER | C1608 JB 1E 104K-T | T | 9.5/75.2 |
| C106 | 4030017320 | S.CER | GRM21BB11H104KA01L (GRM40-034) | T | 2.2/67.7 |
| C107 | 4030011600 | S.CER | C1608 JB 1E 104K-T | T | 9.2/70.9 |
| C108 | 4030017810 | S.CER | C1608 CH 1H 102J-T | T | 9.2/69.6 |
| C109 | 4030017320 | S.CER | GRM21BB11H104KA01L (GRM40-034) | T | 8.1/62.6 |
| C110 | 4030017810 | S.CER | C1608 CH 1H 102J-T | T | 9.0/64.2 |
| C111 | 4030017810 | S.CER | C1608 CH 1H 102J-T | T | 9.0/56.4 |
| C112 | 4030017320 | S.CER | GRM21BB11H104KA01L (GRM40-034) | T | 8.7/54.8 |
| C113 | 4030011600 | S.CER | C1608 JB 1E 104K-T | T | 5.3/102.5 |
| C114 | 4030011600 | S.CER | C1608 JB 1E 104K-T | T | 13.9/60.6 |
| C201 | 4030017320 | S.CER | GRM21BB11H104KA01L (GRM40-034) | T | 18.2/43.1 |
| C202 | 4030017810 | S.CER | C1608 CH 1H 102J-T | T | 15.7/61.3 |
| C204 | 4030008490 | S.CER | C2012 JB 1H 682K-T | T | 31.2/61.6 |
| C206 | 4030008700 | S.CER | GRM21BB11H473KA01L (GRM40 B) | T | 29.3/61.6 |
| C207 | 4030008700 | S.CER | GRM21BB11H473KA01L (GRM40 B) | T | 34.4/36.7 |
| C301 | 4030004760 | S.CER | C2012 JF 1H 104Z-T | T | 49.4/45.5 |
| C303 | 4030011600 | S.CER | C1608 JB 1E 104K-T | T | 43.4/35.4 |
| C305 | 4030004760 | S.CER | C2012 JF 1H 104Z-T | T | 44.4/42.6 |
| C307 | 4030017810 | S.CER | C1608 CH 1H 102J-T | T | 39.7/31.7 |
| C309 | 4030011600 | S.CER | C1608 JB 1E 104K-T | T | 41.1/31.7 |
| C311 | 4030018750 | S.CER | C3225 CH 2J 682K-T | T | 54.1/58.9 |
| C313 | 4030011600 | S.CER | C1608 JB 1E 104K-T | T | 89.1/26.9 |
| C314 | 4510008050 | ELE | 63 ME 220 CZ | | |
| C317 | 4030018790 | S.CER | C3225 JB 2E 104K-T | T | 76.8/34.0 |
| C318 | 4030011600 | S.CER | C1608 JB 1E 104K-T | T | 77.2/96.7 |
| C319 | 4030018790 | S.CER | C3225 JB 2E 104K-T | T | 70.4/79.0 |
| C401 | 4030011790 | S.CER | GRM55RF52A684ZD01L (GRM44-1) | T | 92.4/82.2 |
| C402 | 4030011790 | S.CER | GRM55RF52A684ZD01L (GRM44-1) | T | 92.4/51.8 |
| C403 | 4030011600 | S.CER | C1608 JB 1E 104K-T | T | 79.9/100.1 |
| C404 | 4030011600 | S.CER | C1608 JB 1E 104K-T | T | 88.7/30.4 |
| C405 | 4030006900 | S.CER | C1608 JB 1H 103K-T | T | 79.9/98.8 |
| C406 | 4030006900 | S.CER | C1608 JB 1H 103K-T | T | 88.7/31.7 |
| C407 | 4030017810 | S.CER | C1608 CH 1H 102J-T | T | 79.9/97.5 |
| C408 | 4030017810 | S.CER | C1608 CH 1H 102J-T | T | 88.7/33.0 |
| C409 | 4030018790 | S.CER | C3225 JB 2E 104K-T | T | 111.3/100.2 |
| C410 | 4030018790 | S.CER | C3225 JB 2E 104K-T | T | 111.3/33.9 |
| C411 | 4030006880 | S.CER | C1608 JB 1H 472K-T | T | 114.9/99.1 |
| C412 | 4030006880 | S.CER | C1608 JB 1H 472K-T | T | 116.3/35.0 |
| C413 | 4030011600 | S.CER | C1608 JB 1E 104K-T | T | 97.8/99.1 |
| C414 | 4030011600 | S.CER | C1608 JB 1E 104K-T | T | 97.4/36.6 |
| C415 | 4030011790 | S.CER | GRM55RF52A684ZD01L (GRM44-1) | T | 102.8/88.8 |
| C416 | 4030011790 | S.CER | GRM55RF52A684ZD01L (GRM44-1) | T | 103.9/49.0 |
| C417 | 4030018760 | S.CER | C4532 CH 2A 104K-T | T | 190.2/82.6 |
| C418 | 4030018760 | S.CER | C4532 CH 2A 104K-T | T | 193.9/82.6 |
| C419 | 4030018760 | S.CER | C4532 CH 2A 104K-T | T | 190.2/53.4 |
| C420 | 4030018760 | S.CER | C4532 CH 2A 104K-T | T | 193.9/53.4 |
| C501 | 4030018790 | S.CER | C3225 JB 2E 104K-T | T | 183.8/32.0 |
| C502 | 4030018780 | S.CER | C3225 JB 2J 473K-T | T | 180.4/32.0 |
| C503 | 4030018770 | S.CER | C3216 CH 2J 102J-T | T | 177.3/32.0 |
| C504 | 4510006830 | ELE | 63 ME 470CZ | | |
| C505 | 4510006830 | ELE | 63 ME 470CZ | | |
| C506 | 4030006880 | S.CER | C1608 JB 1H 472K-T | T | 173.7/15.9 |
| C507 | 4030006880 | S.CER | C1608 JB 1H 472K-T | T | 137.2/17.0 |
| C510 | 4030018790 | S.CER | C3225 JB 2E 104K-T | T | 170.2/13.6 |
| C511 | 4030018780 | S.CER | C3225 JB 2J 473K-T | T | 170.2/10.6 |
| C512 | 4030018770 | S.CER | C3216 CH 2J 102J-T | T | 170.0/7.3 |
| C513 | 4510008050 | ELE | 63 ME 220 CZ | | |
| C514 | 4030011790 | S.CER | GRM55RF52A684ZD01L (GRM44-1) | T | 164.8/6.7 |
| C515 | 4030011790 | S.CER | GRM55RF52A684ZD01L (GRM44-1) | T | 148.5/6.7 |
| J1 | 6510028210 | CON | SJ050010 (TMP-J01X-V6) | | |
| J2 | 6510022311 | S.CON | B5B-PH-SM4-TB(LF)(SN) | T | 6.0/23.0 |
| J5 | 6510020421 | S.CON | S4B-PH-SM4-TB(LF)(SN) | T | 93.0/4.5 |
| J401 | 6510017920 | CON | 1811P342 | | |
| J402 | 6910001040 | CON | IPS-1136 | | |
| W401 | 9025900670 | WIR | 23/05/060/B21/W07 | | |
| W501 | 9040401001 | JUM | 74/98/050/X98/X98 | | |

Eqv.= This component is equivalent to the REF No. component listed above, and may be substituted on parts orders and repairs.

M.=Mounted side (T: Mounted on the Top side, B: Mounted on the Bottom side)
S.=Surface mount

## [PA200W UNIT]

| REF NO. | PARTS NO. | DESCRIPTION | | M. | H/V LOCATION |
|---|---|---|---|---|---|
| EP501 | 6910011330 | TER | OT-009 M3 | | |
| EP502 | 6910011330 | TER | OT-009 M3 | | |
| EP503 | 6910000640 | BEA | FSRH090160RN000B (FSOH090RN) | | |

## [DC-DC UNIT]

| REF NO. | PARTS NO. | DESCRIPTION | | M. | H/V LOCATION |
|---|---|---|---|---|---|
| D21 | 1750000960 | S.DIO | RB081L-20 | B | 28.5/45.9 |
| L21 | 6200003950 | S.COI | HF50ACC 322513-T | B | 211.7/124.6 |
| L22 | 6200010891 | S.COI | CDRH124NP-150MCI | B | 169.7/124.5 |
| L81 | 6200003950 | S.COI | HF50ACC 322513-T | B | 142.1/109.7 |
| L82 | 6200010901 | S.COI | CDRH104RNP-100NCI | B | 139.1/107.3 |
| L102 | 6200010881 | S.COI | CDRH124NP-330MCI | T | 20.9/66.5 |
| L103 | 6190001191 | S.COI | D10F-#A814AY-101K | T | 15.2/66.4 |
| C122 | 4030011600 | S.CER | C1608 JB 1E 104K-T | B | 74.3/70.4 |
| C124 | 4030006880 | S.CER | C1608 JB 1H 472K-T | B | 77.4/68.9 |
| RL142 | 6330001760 | REL | AW3023 | | |
| J2 | 6510003471 | CON | B11B-EH-S(LF)(SN) | | |
| J3 | 6510003431 | CON | B07B-EH-S(LF)(SN) | | |
| J4 | 6510003461 | CON | B10B-EH-S(LF)(SN) | | |
| W1 | 8900012780 | CAB | OPC-1298 | | |

Eqv.= This component is equivalent to the REF No. component listed above, and may be substituted on parts orders and repairs.

M.=Mounted side (T: Mounted on the Top side, B: Mounted on the Bottom side)
S.=Surface mount

## [CTRL UNIT]

| REF NO. | PARTS NO. | DESCRIPTION | | M. | H/V LOCATION |
|---|---|---|---|---|---|
| IC1 | 1140004120 | S.IC | M38022M2-138FP | T | 65.7/81.8 |
| IC2 | 1130016410 | S.IC | BR24T16FVT-WE2 | T | 54.0/86.9 |
| IC3 | 1130003921 | S.IC | TC4S69F(TE85RF) | T | 55.9/58.2 |
| IC4 | 1180001072 | S.IC | TA7805F(TE16L1NQ) | B | 63.0/57.7 |
| IC5 | 1130009691 | S.IC | TC74HCT7007AF(F) S | B | 92.5/91.6 |
| IC6 | 1130006441 | S.IC | TC7S08F(TE85RF) | T | 81.7/70.3 |
| IC51 | 1130011530 | S.IC | CD74HC4094M96 | T | 42.2/72.4 |
| IC52 | 1130007690 | S.IC | BU4066BCF-E2 | B | 12.5/76.9 |
| IC55 | 1130011530 | S.IC | CD74HC4094M96 | B | 100.2/76.2 |
| IC56 | 1130011530 | S.IC | CD74HC4094M96 | B | 114.4/76.2 |
| IC57 | 1160000132 | S.IC | TD62783AFG(OSEL) | T | 99.6/73.2 |
| IC58 | 1160000132 | S.IC | TD62783AFG(OSEL) | T | 113.8/73.2 |
| IC101 | 1110000960 | S.IC | NJM4558M-TE1-#FMZB | T | 19.4/37.8 |
| IC151 | 1120002301 | S.IC | TC74AC04F(F) S | B | 35.3/44.3 |
| IC153 | 1130012011 | S.IC | TC7SZ32F(TE85LF) | T | 31.2/47.3 |
| IC154 | 1130012011 | S.IC | TC7SZ32F(TE85LF) | T | 42.4/45.8 |
| IC155 | 1130012011 | S.IC | TC7SZ32F(TE85LF) | T | 36.0/47.5 |
| IC156 | 1130012021 | S.IC | TC74ACT112F(ELF) | T | 38.4/56.5 |
| IC201 | 1110000960 | S.IC | NJM4558M-TE1-#FMZB | T | 19.0/54.7 |
| IC301 | 1110002690 | S.IC | NJM2903M-TE1-#FMZB | T | 73.4/59.0 |
| IC401 | 1160000132 | S.IC | TD62783AFG(OSEL) | T | 13.6/86.1 |
| IC402 | 1160000132 | S.IC | TD62783AFG(OSEL) | T | 31.6/84.7 |
| Q1 | 1590001330 | S.TRA | DTA114EUA T106 | T | 78.5/75.3 |
| Q2 | 1590000680 | S.TRA | DTC114EUA T106 | T | 77.8/71.2 |
| Q3 | 1590000680 | S.TRA | DTC114EUA T106 | T | 128.4/74.5 |
| Q4 | 1590000680 | S.TRA | DTC114EUA T106 | T | 128.4/77.0 |
| Q5 | 1590000680 | S.TRA | DTC114EUA T106 | T | 128.4/81.3 |
| Q6 | 1590000680 | S.TRA | DTC114EUA T106 | T | 128.4/83.8 |
| Q7 | 1590000680 | S.TRA | DTC114EUA T106 | T | 128.4/88.5 |
| Q8 | 1590000680 | S.TRA | DTC114EUA T106 | T | 128.4/91.0 |
| Q9 | 1590000680 | S.TRA | DTC114EUA T106 | T | 128.4/95.7 |
| Q10 | 1590000680 | S.TRA | DTC114EUA T106 | T | 128.4/100.5 |
| Q11 | 1590000680 | S.TRA | DTC114EUA T106 | B | 85.8/99.9 |
| Q51 | 1590000680 | S.TRA | DTC114EUA T106 | T | 6.1/78.6 |
| Q52 | 1590000680 | S.TRA | DTC114EUA T106 | T | 12.5/78.6 |
| Q53 | 1590000680 | S.TRA | DTC114EUA T106 | B | 6.6/72.8 |
| Q54 | 1560001260 | S.FET | 2SK3018 T106 | B | 121.2/80.2 |
| Q55 | 1590000680 | S.TRA | DTC114EUA T106 | B | 130.2/68.9 |
| Q59 | 1590000680 | S.TRA | DTC114EUA T106 | T | 56.9/69.5 |
| Q201 | 1560000871 | S.FET | 2SK515-T1B-A (X33) | T | 52.6/43.0 |
| Q251 | 1590000680 | S.TRA | DTC114EUA T106 | T | 74.2/34.9 |
| D1 | 1730000411 | S.ZEN | RD5.1M-T2B-A B2 | T | 63.4/58.4 |
| D2 | 1750002160 | S.DIO | DA2J10800L | T | 67.7/55.9 |
| D3 | 1750000201 | S.DIO | 1SS319(TE85RF) | B | 129.5/98.1 |
| D4 | 1750000201 | S.DIO | 1SS319(TE85RF) | B | 129.5/90.0 |
| D5 | 1750000201 | S.DIO | 1SS319(TE85RF) | B | 129.5/82.8 |
| D6 | 1750000201 | S.DIO | 1SS319(TE85RF) | B | 129.5/76.0 |
| D7 | 1730000031 | S.ZEN | RD5.6M-T2B-A B2 | T | 63.6/54.9 |
| D101 | 1790000491 | S.DIO | HSM88ASTR-E | T | 14.8/24.4 |
| D102 | 1790000491 | S.DIO | HSM88ASTR-E | T | 25.7/29.6 |
| D103 | 1750000201 | S.DIO | 1SS319(TE85RF) | T | 19.3/42.1 |
| D151 | 1790000491 | S.DIO | HSM88ASTR-E | T | 32.0/38.2 |
| D152 | 1790000491 | S.DIO | HSM88ASTR-E | T | 39.4/38.2 |
| D153 | 1790000491 | S.DIO | HSM88ASTR-E | T | 28.4/57.2 |
| D154 | 1790000491 | S.DIO | HSM88ASTR-E | T | 29.6/53.4 |
| D201 | 1790000491 | S.DIO | HSM88ASTR-E | T | 57.7/37.3 |
| D202 | 1790000491 | S.DIO | HSM88ASTR-E | T | 48.5/37.1 |
| D203 | 1750000201 | S.DIO | 1SS319(TE85RF) | T | 18.0/60.9 |
| D251 | 1750000271 | S.DIO | 1SS301(TE85LF) | T | 72.1/36.5 |
| D301 | 1790000491 | S.DIO | HSM88ASTR-E | T | 81.5/58.3 |
| D302 | 1790000491 | S.DIO | HSM88ASTR-E | T | 88.4/59.6 |
| X1 | 6050009890 | S.XTA | CR-569 SMD-49 6.144 MHz <KDS> | T | 83.2/79.5 |
| L1 | 6200003261 | S.COI | NLV32T-101J | T | 14.7/18.0 |
| L2 | 6200003261 | S.COI | NLV32T-101J | T | 14.7/20.5 |
| L4 | 2040000490 | COI | EXC-ELDR25C | | |
| L7 | 6200003590 | S.COI | EXCCL3225U1 | T | 106.3/91.2 |
| L8 | 6200003590 | S.COI | EXCCL3225U1 | T | 103.3/91.1 |
| L9 | 6200003950 | S.COI | HF50ACC 322513-T | B | 92.0/101.0 |
| L51 | 6200003261 | S.COI | NLV32T-101J | B | 120.5/26.0 |
| L52 | 6200005131 | S.COI | NLC453232T-101K-PF | B | 126.5/39.5 |
| L101 | 6140004410 | COI | LR-502 | | |
| L151 | 6140004410 | COI | LR-502 | | |
| L152 | 6200001831 | S.COI | NLV32T-100J | T | 41.4/63.0 |
| L201 | 6140004410 | COI | LR-502 | | |
| L202 | 6180003300 | COI | T6-222J (2.2M) | | |
| L301 | 6140004410 | COI | LR-502 | | |
| L302 | 6200003261 | S.COI | NLV32T-101J | B | 69.4/61.2 |
| L401 | 6200003950 | S.COI | HF50ACC 322513-T | T | 26.4/101.5 |
| L402 | 6200003950 | S.COI | HF50ACC 322513-T | T | 18.5/101.5 |
| R2 | 7030003680 | S.RES | ERJ3GEYJ 104 V (100K) | T | 63.0/71.0 |
| R3 | 7030003680 | S.RES | ERJ3GEYJ 104 V (100K) | T | 64.3/71.0 |
| R4 | 7030003680 | S.RES | ERJ3GEYJ 104 V (100K) | T | 65.6/71.0 |
| R5 | 7030003680 | S.RES | ERJ3GEYJ 104 V (100K) | T | 66.9/71.0 |
| R6 | 7030003560 | S.RES | ERJ3GEYJ 103 V (10K) | T | 74.7/71.0 |
| R7 | 7030003440 | S.RES | ERJ3GEYJ 102 V (1K) | T | 73.4/71.0 |
| R8 | 7030003680 | S.RES | ERJ3GEYJ 104 V (100K) | T | 55.4/72.8 |
| R9 | 7030003680 | S.RES | ERJ3GEYJ 104 V (100K) | T | 54.7/74.7 |
| R10 | 7030003680 | S.RES | ERJ3GEYJ 104 V (100K) | T | 57.3/72.9 |
| R11 | 7030003680 | S.RES | ERJ3GEYJ 104 V (100K) | T | 53.4/74.7 |
| R12 | 7030003440 | S.RES | ERJ3GEYJ 102 V (1K) | T | 78.3/83.9 |
| R13 | 7030003680 | S.RES | ERJ3GEYJ 104 V (100K) | T | 76.6/75.6 |
| R14 | 7030003680 | S.RES | ERJ3GEYJ 104 V (100K) | T | 78.5/78.2 |
| R15 | 7030003440 | S.RES | ERJ3GEYJ 102 V (1K) | T | 55.6/60.7 |
| R16 | 7030003320 | S.RES | ERJ3GEYJ 101 V (100) | T | 54.8/55.2 |

## [CTRL UNIT]

| REF NO. | PARTS NO. | DESCRIPTION | | M. | H/V LOCATION |
|---|---|---|---|---|---|
| R17 | 7030003560 | S.RES | ERJ3GEYJ 103 V (10K) | T | 54.1/82.3 |
| R18 | 7030003560 | S.RES | ERJ3GEYJ 103 V (10K) | T | 54.1/81.0 |
| R19 | 7030003680 | S.RES | ERJ3GEYJ 104 V (100K) | T | 58.3/58.2 |
| R20 | 7030003570 | S.RES | ERJ3GEYJ 123 V (12K) | T | 59.6/60.6 |
| R21 | 7030003650 | S.RES | ERJ3GEYJ 563 V (56K) | T | 59.6/58.2 |
| R22 | 7030003450 | S.RES | ERJ3GEYJ 122 V (1.2K) | T | 66.3/58.5 |
| R23 | 7030003560 | S.RES | ERJ3GEYJ 103 V (10K) | B | 105.1/100.0 |
| R24 | 7030003440 | S.RES | ERJ3GEYJ 102 V (1K) | B | 103.0/98.8 |
| R25 | 7030003380 | S.RES | ERJ3GEYJ 331 V (330) | B | 126.0/99.1 |
| R26 | 7030003380 | S.RES | ERJ3GEYJ 331 V (330) | B | 126.0/97.1 |
| R27 | 7030003380 | S.RES | ERJ3GEYJ 331 V (330) | B | 126.0/91.0 |
| R28 | 7030003380 | S.RES | ERJ3GEYJ 331 V (330) | B | 126.0/89.0 |
| R29 | 7030003380 | S.RES | ERJ3GEYJ 331 V (330) | B | 126.0/83.8 |
| R30 | 7030003380 | S.RES | ERJ3GEYJ 331 V (330) | B | 126.0/81.8 |
| R31 | 7030003380 | S.RES | ERJ3GEYJ 331 V (330) | B | 126.0/77.0 |
| R32 | 7030003380 | S.RES | ERJ3GEYJ 331 V (330) | B | 126.0/75.0 |
| R40 | 7030003440 | S.RES | ERJ3GEYJ 102 V (1K) | T | 61.2/99.9 |
| R42 | 7030003860 | S.RES | ERJ3GE JPW V | T | 60.4/71.0 |
| R43 | 7030003860 | S.RES | ERJ3GE JPW V | T | 60.7/69.0 |
| R44 | 7030003860 | S.RES | ERJ3GE JPW V | T | 68.2/71.0 |
| R45 | 7030003860 | S.RES | ERJ3GE JPW V | T | 65.7/68.5 |
| R46 | 7030003860 | S.RES | ERJ3GE JPW V | T | 70.6/68.9 |
| R51 | 7030003440 | S.RES | ERJ3GEYJ 102 V (1K) | B | 35.8/80.2 |
| R52 | 7030003440 | S.RES | ERJ3GEYJ 102 V (1K) | B | 34.3/80.2 |
| R53 | 7030003440 | S.RES | ERJ3GEYJ 102 V (1K) | B | 32.8/80.2 |
| R54 | 7030003440 | S.RES | ERJ3GEYJ 102 V (1K) | B | 31.2/80.2 |
| R55 | 7030003440 | S.RES | ERJ3GEYJ 102 V (1K) | B | 29.6/80.2 |
| R56 | 7030003440 | S.RES | ERJ3GEYJ 102 V (1K) | B | 28.0/80.2 |
| R57 | 7030003440 | S.RES | ERJ3GEYJ 102 V (1K) | B | 26.4/80.2 |
| R58 | 7030003440 | S.RES | ERJ3GEYJ 102 V (1K) | B | 24.8/80.2 |
| R59 | 7030003440 | S.RES | ERJ3GEYJ 102 V (1K) | T | 18.3/78.7 |
| R60 | 7030003440 | S.RES | ERJ3GEYJ 102 V (1K) | T | 17.0/76.0 |
| R61 | 7030003440 | S.RES | ERJ3GEYJ 102 V (1K) | T | 15.7/76.0 |
| R62 | 7030003440 | S.RES | ERJ3GEYJ 102 V (1K) | T | 14.4/78.7 |
| R63 | 7030003440 | S.RES | ERJ3GEYJ 102 V (1K) | T | 10.6/78.7 |
| R64 | 7030003440 | S.RES | ERJ3GEYJ 102 V (1K) | T | 9.3/74.8 |
| R65 | 7030003440 | S.RES | ERJ3GEYJ 102 V (1K) | T | 8.0/74.8 |
| R66 | 7030003520 | S.RES | ERJ3GEYJ 472 V (4.7K) | B | 15.6/81.6 |
| R67 | 7030003200 | S.RES | ERJ3GEYJ 100 V (10) | T | 99.8/90.4 |
| R68 | 7030003200 | S.RES | ERJ3GEYJ 100 V (10) | T | 98.5/90.4 |
| R69 | 7030003200 | S.RES | ERJ3GEYJ 100 V (10) | T | 97.2/90.4 |
| R70 | 7030004040 | S.RES | ERJ3GEYJ 4R7 V (4.7) | T | 104.8/65.9 |
| R71 | 7030004040 | S.RES | ERJ3GEYJ 4R7 V (4.7) | T | 103.5/65.9 |
| R72 | 7030004040 | S.RES | ERJ3GEYJ 4R7 V (4.7) | T | 102.2/65.9 |
| R73 | 7030004040 | S.RES | ERJ3GEYJ 4R7 V (4.7) | T | 100.9/65.9 |
| R74 | 7030004040 | S.RES | ERJ3GEYJ 4R7 V (4.7) | T | 99.6/65.9 |
| R75 | 7030004040 | S.RES | ERJ3GEYJ 4R7 V (4.7) | T | 98.3/65.9 |
| R76 | 7030004040 | S.RES | ERJ3GEYJ 4R7 V (4.7) | T | 97.0/65.9 |
| R77 | 7030004040 | S.RES | ERJ3GEYJ 4R7 V (4.7) | T | 95.7/65.9 |
| R78 | 7030004040 | S.RES | ERJ3GEYJ 4R7 V (4.7) | B | 120.1/64.6 |
| R84 | 7030004040 | S.RES | ERJ3GEYJ 4R7 V (4.7) | B | 110.5/64.6 |
| R85 | 7030004040 | S.RES | ERJ3GEYJ 4R7 V (4.7) | B | 108.9/64.6 |
| R86 | 7030003560 | S.RES | ERJ3GEYJ 103 V (10K) | B | 116.2/83.6 |
| R87 | 7030003860 | S.RES | ERJ3GE JPW V | T | 32.5/76.0 |
| R88 | 7030003860 | S.RES | ERJ3GE JPW V | T | 31.2/76.0 |
| R89 | 7030003860 | S.RES | ERJ3GE JPW V | T | 29.9/76.0 |
| R90 | 7030003860 | S.RES | ERJ3GE JPW V | T | 28.6/76.0 |
| R91 | 7030003860 | S.RES | ERJ3GE JPW V | T | 27.3/76.0 |
| R92 | 7030003860 | S.RES | ERJ3GE JPW V | T | 26.0/76.0 |
| R95 | 7030003860 | S.RES | ERJ3GE JPW V | T | 15.7/78.7 |
| R97 | 7030003860 | S.RES | ERJ3GE JPW V | T | 8.0/78.7 |
| R101 | 7030010950 | S.RES | ERJ1TYJ 100U (10) | T | 18.6/29.5 |
| R102 | 7030010950 | S.RES | ERJ1TYJ 100U (10) | T | 22.3/29.5 |
| R103 | 7030003560 | S.RES | ERJ3GEYJ 103 V (10K) | T | 12.2/34.8 |
| R104 | 7030003560 | S.RES | ERJ3GEYJ 103 V (10K) | T | 27.7/35.0 |
| R105 | 7030003720 | S.RES | ERJ3GEYJ 224 V (220K) | T | 12.2/37.4 |
| R106 | 7030003720 | S.RES | ERJ3GEYJ 224 V (220K) | T | 25.0/36.7 |
| R107 | 7030003660 | S.RES | ERJ3GEYJ 683 V (68K) | T | 14.1/36.5 |
| R108 | 7030003660 | S.RES | ERJ3GEYJ 683 V (68K) | T | 23.2/34.8 |
| R109 | 7030003720 | S.RES | ERJ3GEYJ 224 V (220K) | T | 13.3/38.7 |
| R110 | 7030003720 | S.RES | ERJ3GEYJ 224 V (220K) | T | 25.0/37.9 |
| R111 | 7030009340 | S.RES | ERJ3GEYJ 275V (2.7M) | T | 13.7/40.6 |
| R112 | 7030003810 | S.RES | ERJ3GEYJ 125 V (1.2M) | T | 25.0/39.1 |
| R115 | 7030009340 | S.RES | ERJ3GEYJ 275V (2.7M) | T | 12.4/40.6 |
| R151 | 7030007190 | S.RES | ERJ12YJ220U (22) | T | 37.6/27.2 |
| R152 | 7030010620 | S.RES | ERJ12YJ180U (18) | B | 38.1/26.8 |
| R153 | 7030007190 | S.RES | ERJ12YJ220U (22) | T | 37.6/31.8 |
| R154 | 7030010620 | S.RES | ERJ12YJ180U (18) | B | 38.1/31.8 |
| R155 | 7030003320 | S.RES | ERJ3GEYJ 101 V (100) | T | 37.0/39.6 |
| R157 | 7030003320 | S.RES | ERJ3GEYJ 101 V (100) | T | 30.4/40.2 |
| R158 | 7030003560 | S.RES | ERJ3GEYJ 103 V (10K) | T | 31.9/41.6 |
| R159 | 7030003560 | S.RES | ERJ3GEYJ 103 V (10K) | T | 38.4/41.5 |
| R160 | 7030003280 | S.RES | ERJ3GEYJ 470 V (47) | T | 30.0/42.3 |
| R161 | 7030003280 | S.RES | ERJ3GEYJ 470 V (47) | T | 39.7/43.0 |
| R162 | 7030003440 | S.RES | ERJ3GEYJ 102 V (1K) | T | 30.9/44.9 |
| R163 | 7030003440 | S.RES | ERJ3GEYJ 102 V (1K) | T | 42.0/43.3 |
| R164 | 7030003280 | S.RES | ERJ3GEYJ 470 V (47) | T | 33.6/47.7 |
| R165 | 7030003280 | S.RES | ERJ3GEYJ 470 V (47) | T | 39.2/46.4 |
| R166 | 7030003440 | S.RES | ERJ3GEYJ 102 V (1K) | T | 34.3/44.7 |
| R167 | 7030003440 | S.RES | ERJ3GEYJ 102 V (1K) | T | 39.2/45.1 |
| R168 | 7030003280 | S.RES | ERJ3GEYJ 470 V (47) | T | 38.8/49.8 |
| R169 | 7030003440 | S.RES | ERJ3GEYJ 102 V (1K) | T | 38.8/51.1 |
| R170 | 7030003280 | S.RES | ERJ3GEYJ 470 V (47) | T | 31.5/58.2 |
| R171 | 7030003280 | S.RES | ERJ3GEYJ 470 V (47) | T | 31.5/56.9 |
| R172 | 7030003480 | S.RES | ERJ3GEYJ 222 V (2.2K) | T | 32.0/53.7 |
| R173 | 7030003500 | S.RES | ERJ3GEYJ 332 V (3.3K) | T | 27.2/54.9 |
| R174 | 7030003360 | S.RES | ERJ3GEYJ 221 V (220) | T | 27.2/52.3 |
| R201 | 7030010420 | S.RES | ERJ1TYJ 560U (56) | T | 49.1/29.7 |
| R202 | 7030010420 | S.RES | ERJ1TYJ 560U (56) | B | 49.4/29.4 |
| R203 | 7030010420 | S.RES | ERJ1TYJ 560U (56) | T | 49.1/33.7 |
| R204 | 7030010420 | S.RES | ERJ1TYJ 560U (56) | B | 49.4/34.0 |
| R205 | 7030003560 | S.RES | ERJ3GEYJ 103 V (10K) | T | 52.3/45.4 |
| R206 | 7030003560 | S.RES | ERJ3GEYJ 103 V (10K) | T | 57.4/41.5 |
| R207 | 7030003800 | S.RES | ERJ3GEYJ 105 V (1M) | T | 50.1/41.9 |
| R208 | 7030003560 | S.RES | ERJ3GEYJ 103 V (10K) | T | 54.8/42.6 |

Eqv.= This component is equivalent to the REF No. component listed above, and may be substituted on parts orders and repairs.

M.=Mounted side (T: Mounted on the Top side, B: Mounted on the Bottom side)
S.=Surface mount

## [CTRL UNIT]

| REF NO. | PARTS NO. | DESCRIPTION | | M. | H/V LOCATION |
|---|---|---|---|---|---|
| R209 | 7030003520 | S.RES | ERJ3GEYJ 472 V (4.7K) | T | 54.8/40.0 |
| R210 | 7030003440 | S.RES | ERJ3GEYJ 102 V (1K) | T | 56.1/42.7 |
| R211 | 7030003480 | S.RES | ERJ3GEYJ 222 V (2.2K) | T | 13.1/49.4 |
| R212 | 7030003560 | S.RES | ERJ3GEYJ 103 V (10K) | T | 25.1/49.4 |
| R213 | 7030005331 | S.RES | ERA3YED 562V (5.6K) | T | 17.8/50.0 |
| R214 | 7030005331 | S.RES | ERA3YED 562V (5.6K) | T | 16.5/50.0 |
| R215 | 7030005871 | S.RES | ERA3YKD 104V (100K) | T | 14.0/53.0 |
| R216 | 7030008121 | S.RES | ERA3YED 682V (6.8K) | T | 20.7/50.0 |
| R217 | 7030008121 | S.RES | ERA3YED 682V (6.8K) | T | 22.3/48.1 |
| R218 | 7030005871 | S.RES | ERA3YKD 104V (100K) | T | 23.8/52.0 |
| R221 | 7030003670 | S.RES | ERJ3GEYJ 823 V (82K) | B | 17.1/57.0 |
| R222 | 7030003680 | S.RES | ERJ3GEYJ 104 V (100K) | T | 20.9/51.3 |
| R223 | 7030003820 | S.RES | ERJ3GEYJ 155 V (1.5M) | T | 14.0/55.8 |
| R224 | 7030003820 | S.RES | ERJ3GEYJ 155 V (1.5M) | T | 23.8/54.6 |
| R225 | 7030003560 | S.RES | ERJ3GEYJ 103 V (10K) | T | 14.0/61.4 |
| R226 | 7030003560 | S.RES | ERJ3GEYJ 103 V (10K) | T | 21.9/61.4 |
| R227 | 7030003560 | S.RES | ERJ3GEYJ 103 V (10K) | T | 14.7/63.4 |
| R228 | 7030003560 | S.RES | ERJ3GEYJ 103 V (10K) | T | 21.3/63.4 |
| R252 | 7030000230 | S.RES | MCR10EZHJ 56 (560) | T | 70.8/31.9 |
| R253 | 7030000230 | S.RES | MCR10EZHJ 56 (560) | T | 69.9/35.2 |
| R254 | 7030000230 | S.RES | MCR10EZHJ 56 (560) | T | 70.8/38.7 |
| R255 | 7030000220 | S.RES | MCR10EZHJ 47 (470) | T | 72.2/40.8 |
| R256 | 7030000230 | S.RES | MCR10EZHJ 56 (560) | T | 72.4/31.0 |
| R301 | 7030003560 | S.RES | ERJ3GEYJ 103 V (10K) | T | 83.7/57.6 |
| R302 | 7030003670 | S.RES | ERJ3GEYJ 823 V (82K) | T | 81.9/61.3 |
| R303 | 7030010910 | S.RES | ERJ1TYJ 150U (15) | B | 90.1/60.7 |
| R304 | 7030003560 | S.RES | ERJ3GEYJ 103 V (10K) | T | 85.6/62.0 |
| R305 | 7030003720 | S.RES | ERJ3GEYJ 224 V (220K) | T | 80.6/61.3 |
| R306 | 7030003660 | S.RES | ERJ3GEYJ 683 V (68K) | T | 78.7/57.2 |
| R307 | 7030003660 | S.RES | ERJ3GEYJ 683 V (68K) | T | 79.2/59.8 |
| R308 | 7030003840 | S.RES | ERJ3GEYJ 225 V (2.2M) | B | 76.5/58.3 |
| R309 | 7030003720 | S.RES | ERJ3GEYJ 224 V (220K) | T | 76.2/53.9 |
| R310 | 7030003840 | S.RES | ERJ3GEYJ 225 V (2.2M) | T | 73.4/54.0 |
| R311 | 7030003440 | S.RES | ERJ3GEYJ 102 V (1K) | T | 76.0/55.5 |
| R312 | 7030003560 | S.RES | ERJ3GEYJ 103 V (10K) | T | 73.4/55.5 |
| R313 | 7030003700 | S.RES | ERJ3GEYJ 154 V (150K) | T | 78.5/61.7 |
| R345 | 7030003560 | S.RES | ERJ3GEYJ 103 V (10K) | T | 88.4/83.7 |
| R401 | 7030004040 | S.RES | ERJ3GEYJ 4R7 V (4.7) | T | 17.5/93.4 |
| R402 | 7030004040 | S.RES | ERJ3GEYJ 4R7 V (4.7) | T | 16.2/93.4 |
| R403 | 7030004040 | S.RES | ERJ3GEYJ 4R7 V (4.7) | T | 14.9/93.4 |
| R404 | 7030004040 | S.RES | ERJ3GEYJ 4R7 V (4.7) | T | 13.6/93.4 |
| R405 | 7030004040 | S.RES | ERJ3GEYJ 4R7 V (4.7) | T | 12.3/93.4 |
| R406 | 7030004040 | S.RES | ERJ3GEYJ 4R7 V (4.7) | T | 11.0/93.4 |
| R407 | 7030004040 | S.RES | ERJ3GEYJ 4R7 V (4.7) | T | 9.7/93.4 |
| R408 | 7030004040 | S.RES | ERJ3GEYJ 4R7 V (4.7) | T | 8.4/93.4 |
| R409 | 7030004040 | S.RES | ERJ3GEYJ 4R7 V (4.7) | B | 36.6/86.7 |
| R410 | 7030004040 | S.RES | ERJ3GEYJ 4R7 V (4.7) | B | 35.1/86.7 |
| R411 | 7030004040 | S.RES | ERJ3GEYJ 4R7 V (4.7) | B | 33.6/86.7 |
| R412 | 7030004040 | S.RES | ERJ3GEYJ 4R7 V (4.7) | B | 32.0/86.7 |
| R413 | 7030004040 | S.RES | ERJ3GEYJ 4R7 V (4.7) | B | 30.4/86.7 |
| R414 | 7030004040 | S.RES | ERJ3GEYJ 4R7 V (4.7) | B | 28.8/86.7 |
| R415 | 7030004040 | S.RES | ERJ3GEYJ 4R7 V (4.7) | B | 27.2/86.7 |
| R416 | 7030004040 | S.RES | ERJ3GEYJ 4R7 V (4.7) | B | 25.6/86.7 |
| R417 | 7030003440 | S.RES | ERJ3GEYJ 102 V (1K) | B | 31.3/98.5 |
| R418 | 7030003440 | S.RES | ERJ3GEYJ 102 V (1K) | B | 44.8/98.5 |
| R419 | 7030003440 | S.RES | ERJ3GEYJ 102 V (1K) | B | 32.9/98.5 |
| R420 | 7030003440 | S.RES | ERJ3GEYJ 102 V (1K) | B | 46.4/98.5 |
| R421 | 7030003440 | S.RES | ERJ3GEYJ 102 V (1K) | B | 34.5/98.5 |
| R422 | 7030003440 | S.RES | ERJ3GEYJ 102 V (1K) | B | 48.0/98.5 |
| R423 | 7030003440 | S.RES | ERJ3GEYJ 102 V (1K) | B | 36.1/98.5 |
| R424 | 7030003440 | S.RES | ERJ3GEYJ 102 V (1K) | B | 49.6/98.5 |
| R425 | 7030003440 | S.RES | ERJ3GEYJ 102 V (1K) | B | 37.7/98.5 |
| R426 | 7030003440 | S.RES | ERJ3GEYJ 102 V (1K) | B | 51.2/98.5 |
| R427 | 7030003440 | S.RES | ERJ3GEYJ 102 V (1K) | B | 39.3/98.5 |
| R428 | 7030003440 | S.RES | ERJ3GEYJ 102 V (1K) | B | 52.8/98.5 |
| R429 | 7030003440 | S.RES | ERJ3GEYJ 102 V (1K) | B | 40.9/98.5 |
| R430 | 7030003440 | S.RES | ERJ3GEYJ 102 V (1K) | B | 54.4/98.5 |
| R431 | 7030003440 | S.RES | ERJ3GEYJ 102 V (1K) | B | 42.5/98.5 |
| R432 | 7030003440 | S.RES | ERJ3GEYJ 102 V (1K) | B | 56.0/98.5 |
| | | | | | |
| C1 | 4510008540 | S.ELE | EEE1CA100SR | T | 42.6/80.3 |
| C2 | 4030011600 | S.CER | C1608 JB 1E 104K-T | T | 45.9/82.4 |
| C3 | 4030006880 | S.CER | C1608 JB 1H 472K-T | B | 89.6/100.0 |
| C4 | 4030006900 | S.CER | C1608 JB 1H 103K-T | T | 56.0/74.7 |
| C5 | 4030006900 | S.CER | C1608 JB 1H 103K-T | T | 58.6/72.9 |
| C6 | 4030006880 | S.CER | C1608 JB 1H 472K-T | T | 74.6/74.7 |
| C7 | 4030017810 | S.CER | C1608 CH 1H 102J-T | T | 75.3/76.6 |
| C8 | 4030011600 | S.CER | C1608 JB 1E 104K-T | T | 56.0/81.3 |
| C9 | 4030009990 | S.CER | C1608 CH 1H 200J-T | T | 75.3/80.5 |
| C10 | 4030011600 | S.CER | C1608 JB 1E 104K-T | T | 51.8/79.9 |
| C11 | 4030006880 | S.CER | C1608 JB 1H 472K-T | T | 76.6/78.2 |
| C12 | 4030009990 | S.CER | C1608 CH 1H 200J-T | T | 76.6/81.5 |
| C13 | 4510008870 | S.ELE | EEE1AA471UP | T | 48.5/56.6 |
| C14 | 4030011600 | S.CER | C1608 JB 1E 104K-T | T | 60.7/55.3 |
| C15 | 4030011600 | S.CER | C1608 JB 1E 104K-T | T | 67.3/53.7 |
| C16 | 4510008500 | S.ELE | EEE1CA101WP | T | 66.6/48.8 |
| C17 | 4510008550 | S.ELE | EEE1HA010SR | T | 133.3/100.5 |
| C18 | 4510008550 | S.ELE | EEE1HA010SR | T | 133.3/95.7 |
| C19 | 4510008550 | S.ELE | EEE1HA010SR | T | 138.4/91.9 |
| C20 | 4510008550 | S.ELE | EEE1HA010SR | T | 133.3/89.7 |
| C21 | 4510008550 | S.ELE | EEE1HA010SR | T | 138.4/85.3 |
| C22 | 4510008550 | S.ELE | EEE1HA010SR | T | 133.3/83.1 |
| C23 | 4510008550 | S.ELE | EEE1HA010SR | T | 138.4/78.6 |
| C24 | 4510008550 | S.ELE | EEE1HA010SR | T | 133.3/76.5 |
| C25 | 4030011600 | S.CER | C1608 JB 1E 104K-T | T | 53.6/57.7 |
| C26 | 4030006880 | S.CER | C1608 JB 1H 472K-T | T | 61.0/58.2 |
| C38 | 4030011600 | S.CER | C1608 JB 1E 104K-T | T | 91.4/87.6 |
| C39 | 4510008870 | S.ELE | EEE1AA471UP | T | 57.9/49.8 |
| C40 | 4030011600 | S.CER | C1608 JB 1E 104K-T | T | 84.0/70.6 |
| C41 | 4030011600 | S.CER | C1608 JB 1E 104K-T | T | 78.6/73.3 |
| C43 | 4030006880 | S.CER | C1608 JB 1H 472K-T | T | 88.8/95.5 |
| C66 | 4510008540 | S.ELE | EEE1CA100SR | T | 106.6/81.6 |
| C68 | 4030011600 | S.CER | C1608 JB 1E 104K-T | B | 103.6/82.9 |
| C69 | 4030011600 | S.CER | C1608 JB 1E 104K-T | T | 118.4/79.9 |

## [CTRL UNIT]

| REF NO. | PARTS NO. | DESCRIPTION | | M. | H/V LOCATION |
|---|---|---|---|---|---|
| C70 | 4030011600 | S.CER | C1608 JB 1E 104K-T | T | 95.8/80.5 |
| C71 | 4030011600 | S.CER | C1608 JB 1E 104K-T | T | 106.9/77.6 |
| C72 | 4510008540 | S.ELE | EEE1CA100SR | T | 111.6/83.3 |
| C88 | 4030011600 | S.CER | C1608 JB 1E 104K-T | B | 7.8/81.8 |
| C102 | 4010005530 | CER | HM60SJ SL 020C 500V | | |
| C103 | 4010005530 | CER | HM60SJ SL 020C 500V | | |
| C104 | 4610002250 | TRI | TZ03R200Y169B00 | | |
| C105 | 4030011540 | S.CER | C1608 CH 1H 750J-T | B | 13.1/28.5 |
| C106 | 4030011540 | S.CER | C1608 CH 1H 750J-T | T | 25.8/33.1 |
| C107 | 4030017810 | S.CER | C1608 CH 1H 102J-T | T | 12.2/36.1 |
| C108 | 4030017810 | S.CER | C1608 CH 1H 102J-T | T | 25.8/35.5 |
| C109 | 4030006880 | S.CER | C1608 JB 1H 472K-T | B | 21.6/38.4 |
| C110 | 4030006880 | S.CER | C1608 JB 1H 472K-T | B | 18.5/38.4 |
| C111 | 4510008540 | S.ELE | EEE1CA100SR | T | 25.4/45.8 |
| C112 | 4510008540 | S.ELE | EEE1CA100SR | T | 18.9/46.4 |
| C113 | 4030006880 | S.CER | C1608 JB 1H 472K-T | T | 16.3/41.8 |
| C114 | 4030006880 | S.CER | C1608 JB 1H 472K-T | T | 23.1/41.8 |
| C115 | 4030007100 | S.CER | C1608 CH 1H 560J-T | B | 13.1/26.9 |
| C116 | 4030011540 | S.CER | C1608 CH 1H 750J-T | T | 25.8/34.3 |
| C119 | 4030007100 | S.CER | C1608 CH 1H 560J-T | T | 16.9/24.2 |
| C151 | 4010005540 | CER | HM60SJ SL 030C 500V | | |
| C153 | 4030007120 | S.CER | C1608 CH 1H 820J-T | T | 32.3/35.6 |
| C154 | 4030007070 | S.CER | C1608 CH 1H 330J-T | T | 38.5/34.5 |
| C155 | 4030007120 | S.CER | C1608 CH 1H 820J-T | T | 35.9/34.5 |
| C156 | 4030006880 | S.CER | C1608 JB 1H 472K-T | T | 29.8/37.5 |
| C157 | 4030006880 | S.CER | C1608 JB 1H 472K-T | T | 41.6/38.4 |
| C158 | 4030007060 | S.CER | C1608 CH 1H 270J-T | T | 29.7/35.6 |
| C159 | 4030006880 | S.CER | C1608 JB 1H 472K-T | T | 34.4/38.4 |
| C161 | 4030006880 | S.CER | C1608 JB 1H 472K-T | T | 45.2/51.5 |
| C162 | 4550003120 | S.TAN | TEESVD2 1A 476M12R | T | 46.7/46.3 |
| C163 | 4030007170 | S.CER | C1608 CH 1H 221J-T | T | 30.1/59.5 |
| C164 | 4030007170 | S.CER | C1608 CH 1H 221J-T | T | 31.5/55.6 |
| C165 | 4030006880 | S.CER | C1608 JB 1H 472K-T | T | 31.5/51.7 |
| C171 | 4030011600 | S.CER | C1608 JB 1E 104K-T | B | 40.2/37.7 |
| C173 | 4030006880 | S.CER | C1608 JB 1H 472K-T | T | 28.3/48.4 |
| C174 | 4030006880 | S.CER | C1608 JB 1H 472K-T | T | 42.2/49.6 |
| C175 | 4030006880 | S.CER | C1608 JB 1H 472K-T | T | 35.9/49.8 |
| C180 | 4030011600 | S.CER | C1608 JB 1E 104K-T | T | 28.3/49.7 |
| C181 | 4030011600 | S.CER | C1608 JB 1E 104K-T | T | 42.2/48.3 |
| C201 | 4010005580 | CER | HM60SJ SL 070D 500V | | |
| C202 | 4010005520 | CER | HM60SJ SL 010C 500V | | |
| C204 | 4030011570 | S.CER | CM105 CH 101G 50AT | T | 55.3/36.9 |
| C205 | 4030016550 | S.CER | CM105 CH 151G 50AT | T | 51.4/36.9 |
| C206 | 4030009530 | S.CER | C1608 CH 1H 030B-T | T | 52.7/36.9 |
| C207 | 4030006880 | S.CER | C1608 JB 1H 472K-T | T | 49.8/39.3 |
| C208 | 4030006880 | S.CER | C1608 JB 1H 472K-T | T | 56.1/40.0 |
| C209 | 4030017810 | S.CER | C1608 CH 1H 102J-T | T | 51.7/40.0 |
| C210 | 4030006880 | S.CER | C1608 JB 1H 472K-T | T | 53.5/40.0 |
| C211 | 4030006880 | S.CER | C1608 JB 1H 472K-T | T | 14.4/49.4 |
| C212 | 4030006880 | S.CER | C1608 JB 1H 472K-T | T | 23.8/49.4 |
| C213 | 4030006880 | S.CER | C1608 JB 1H 472K-T | B | 19.7/55.7 |
| C214 | 4030007170 | S.CER | C1608 CH 1H 221J-T | T | 14.7/59.4 |
| C215 | 4030007170 | S.CER | C1608 CH 1H 221J-T | T | 21.4/59.4 |
| C216 | 4030011340 | S.CER | C1608 CH 1H 471J-T | T | 15.4/61.4 |
| C217 | 4030011340 | S.CER | C1608 CH 1H 471J-T | T | 20.6/61.4 |
| C218 | 4030006880 | S.CER | C1608 JB 1H 472K-T | B | 18.2/54.1 |
| C252 | 4030006880 | S.CER | C1608 JB 1H 472K-T | T | 72.9/33.3 |
| C253 | 4030006880 | S.CER | C1608 JB 1H 472K-T | T | 76.6/38.3 |
| C254 | 4030006880 | S.CER | C1608 JB 1H 472K-T | T | 73.0/48.1 |
| C255 | 4030006880 | S.CER | C1608 JB 1H 472K-T | T | 73.0/38.2 |
| C301 | 4010005520 | CER | HM60SJ SL 010C 500V | | |
| C302 | 4030007030 | S.CER | C1608 CH 1H 150J-T | T | 85.6/56.6 |
| C303 | 4030007050 | S.CER | C1608 CH 1H 220J-T | T | 85.6/59.2 |
| C304 | 4030017810 | S.CER | C1608 CH 1H 102J-T | T | 83.7/60.5 |
| C305 | 4030017810 | S.CER | C1608 CH 1H 102J-T | T | 90.3/61.3 |
| C307 | 4030006880 | S.CER | C1608 JB 1H 472K-T | T | 78.8/55.9 |
| C308 | 4030006880 | S.CER | C1608 JB 1H 472K-T | T | 77.9/59.8 |
| C309 | 4030011600 | S.CER | C1608 JB 1E 104K-T | T | 68.8/59.8 |
| C310 | 4030009530 | S.CER | C1608 CH 1H 030B-T | T | 85.6/57.9 |
| C417 | 4510008540 | S.ELE | EEE1CA100SR | T | 22.7/77.7 |
| C418 | 4510008540 | S.ELE | EEE1CA100SR | T | 40.6/85.6 |
| C419 | 4030006880 | S.CER | C1608 JB 1H 472K-T | T | 19.6/78.7 |
| C420 | 4030006880 | S.CER | C1608 JB 1H 472K-T | T | 38.4/79.3 |
| | | | | | |
| RL251 | 6330001530 | REL | NR-HD(5V) AE5349 | | |
| RL252 | 6330001460 | REL | FTR-F1CA012V | | |
| RL253 | 6330001460 | REL | FTR-F1CA012V | | |
| | | | | | |
| CP1 | 6910009670 | S.CHE | HK3-S-T | T | 67.8/100.1 |
| CP101 | 6910009670 | S.CHE | HK3-S-T | T | 23.4/81.7 |
| | | | | | |
| J1 | 6510023771 | S.CON | 52793-2470 (2490) | T | 101.8/99.6 |
| J2 | 6510023761 | S.CON | S10B-PH-SM4-TB(LF)(SN) | T | 148.3/82.8 |
| J51 | 6510023771 | S.CON | 52793-2470 (2490) | T | 43.9/99.6 |
| J52 | 6510022031 | S.CON | B10B-ZR-SM4-TF(LF)(SN) | T | 133.0/2.9 |
| J53 | 6510021431 | S.CON | S8B-ZR-SM4A-TF(LF)(SN) | T | 134.6/65.0 |
| J101 | 6510017920 | CON | 1811P342 | | |
| J251 | 6510017920 | CON | 1811P342 | | |
| J252 | 6510017920 | CON | 1811P342 | | |
| J301 | 6510017920 | CON | 1811P342 | | |
| J351 | 6510028210 | CON | SJ050010 (TMP-J01X-V6) | | |
| | | | | | |
| W1 | 9029804001 | WIR | 72/99/040/X98/X98 | | |

Eqv.= This component is equivalent to the REF No. component listed above, and may be substituted on parts orders and repairs.

M.=Mounted side (T: Mounted on the Top side, B: Mounted on the Bottom side)
S.=Surface mount

## [ANT-SW UNIT]

| REF NO. | PARTS NO. | DESCRIPTION | | M. | H/V LOCATION |
|---|---|---|---|---|---|
| IC11 | 1130011510 | S.IC | BU2099FV-E2 | T | 160.6/33.6 |
| IC12 | 1180002391 | S.REG | S-812C33AMC-C2N-G | T | 152.4/28.7 |
| Q12 | 1590001001 | S.TRA | RN2427(TE85LF) | T | 152.4/36.9 |
| Q13 | 1590001001 | S.TRA | RN2427(TE85LF) | T | 164.8/38.6 |
| Q14 | 1590001001 | S.TRA | RN2427(TE85LF) | T | 164.7/17.5 |
| D51 | 1750000550 | S.DIO | 1SS355 TE-17 | T | 162.0/13.3 |
| D52 | 1750000550 | S.DIO | 1SS355 TE-17 | T | 140.3/43.0 |
| D53 | 1750000550 | S.DIO | 1SS355 TE-17 | T | 115.1/41.5 |
| D61 | 1750000550 | S.DIO | 1SS355 TE-17 | T | 119.0/19.7 |
| D62 | 1750000550 | S.DIO | 1SS355 TE-17 | T | 107.2/43.0 |
| D63 | 1750000550 | S.DIO | 1SS355 TE-17 | T | 130.1/54.2 |
| D72 | 1750000550 | S.DIO | 1SS355 TE-17 | B | 138.2/61.3 |
| D73 | 1750000550 | S.DIO | 1SS355 TE-17 | B | 138.2/57.5 |
| D82 | 1750000550 | S.DIO | 1SS355 TE-17 | T | 41.4/45.3 |
| D83 | 1750000550 | S.DIO | 1SS355 TE-17 | T | 28.2/45.3 |
| D84 | 1750000550 | S.DIO | 1SS355 TE-17 | T | 25.8/43.0 |
| L1 | 6200003590 | S.COI | EXCCL3225U1 | T | 51.1/76.5 |
| L2 | 6110001670 | COI | LA-253 | | |
| R1 | 7540000100 | ABS | SRYH-350L | | |
| R2 | 7540000130 | ABS | 2P-50A-301 | | |
| R3 | 7540000130 | ABS | 2P-50A-301 | | |
| R11 | 7030003320 | S.RES | ERJ3GEYJ 101 V (100) | T | 165.5/27.5 |
| R12 | 7030003320 | S.RES | ERJ3GEYJ 101 V (100) | T | 164.2/27.5 |
| R13 | 7030003320 | S.RES | ERJ3GEYJ 101 V (100) | T | 162.9/27.4 |
| R14 | 7030003320 | S.RES | ERJ3GEYJ 101 V (100) | T | 166.3/33.9 |
| R15 | 7030003320 | S.RES | ERJ3GEYJ 101 V (100) | T | 148.7/31.7 |
| R16 | 7030003320 | S.RES | ERJ3GEYJ 101 V (100) | T | 151.5/31.7 |
| R17 | 7030003320 | S.RES | ERJ3GEYJ 101 V (100) | T | 154.7/39.4 |
| R18 | 7030003320 | S.RES | ERJ3GEYJ 101 V (100) | T | 151.5/33.0 |
| R19 | 7030003320 | S.RES | ERJ3GEYJ 101 V (100) | T | 151.5/34.3 |
| R20 | 7030003320 | S.RES | ERJ3GEYJ 101 V (100) | T | 152.2/39.1 |
| R21 | 7030003320 | S.RES | ERJ3GEYJ 101 V (100) | T | 154.7/36.6 |
| R22 | 7030003320 | S.RES | ERJ3GEYJ 101 V (100) | T | 166.9/38.8 |
| R23 | 7030003320 | S.RES | ERJ3GEYJ 101 V (100) | T | 162.3/38.9 |
| R24 | 7030003320 | S.RES | ERJ3GEYJ 101 V (100) | T | 161.0/39.1 |
| R25 | 7030003320 | S.RES | ERJ3GEYJ 101 V (100) | T | 159.7/39.2 |
| R26 | 7030003320 | S.RES | ERJ3GEYJ 101 V (100) | T | 162.7/15.7 |
| C1 | 4010005610 | CER | HM60SJ SL 100D 500V | | |
| C2 | 4010005660 | CER | HM60SJ SL 220J 500V | | |
| C11 | 4030011600 | S.CER | C1608 JB 1E 104K-T | T | 160.0/27.6 |
| C12 | 4030011600 | S.CER | C1608 JB 1E 104K-T | T | 158.7/27.6 |
| C51 | 4030006880 | S.CER | C1608 JB 1H 472K-T | T | 163.6/13.6 |
| C52 | 4030006880 | S.CER | C1608 JB 1H 472K-T | T | 144.5/41.3 |
| C53 | 4030006880 | S.CER | C1608 JB 1H 472K-T | T | 113.6/41.8 |
| C61 | 4030006880 | S.CER | C1608 JB 1H 472K-T | T | 119.3/21.4 |
| C62 | 4030006880 | S.CER | C1608 JB 1H 472K-T | T | 107.5/44.6 |
| C63 | 4030006880 | S.CER | C1608 JB 1H 472K-T | T | 77.5/43.6 |
| C71 | 4030006880 | S.CER | C1608 JB 1H 472K-T | T | 69.0/19.9 |
| C72 | 4030006880 | S.CER | C1608 JB 1H 472K-T | T | 61.6/44.5 |
| C73 | 4030006880 | S.CER | C1608 JB 1H 472K-T | T | 73.1/43.5 |
| C81 | 4030006880 | S.CER | C1608 JB 1H 472K-T | T | 37.2/21.3 |
| C82 | 4030006880 | S.CER | C1608 JB 1H 472K-T | T | 43.0/45.3 |
| C83 | 4030006880 | S.CER | C1608 JB 1H 472K-T | T | 26.7/45.6 |
| C84 | 4030006880 | S.CER | C1608 JB 1H 472K-T | T | 25.1/45.6 |
| RL51 | 6330001460 | REL | FTR-F1CA012V | | |
| RL52 | 6330001780 | REL | FTR-MYAA012D | | |
| RL53 | 6330001780 | REL | FTR-MYAA012D | | |
| RL61 | 6330001460 | REL | FTR-F1CA012V | | |
| RL62 | 6330001780 | REL | FTR-MYAA012D | | |
| RL63 | 6330001780 | REL | FTR-MYAA012D | | |
| RL71 | 6330001460 | REL | FTR-F1CA012V | | |
| RL72 | 6330001780 | REL | FTR-MYAA012D | | |
| RL73 | 6330001780 | REL | FTR-MYAA012D | | |
| RL81 | 6330001460 | REL | FTR-F1CA012V | | |
| RL82 | 6330001780 | REL | FTR-MYAA012D | | |
| RL83 | 6330001780 | REL | FTR-MYAA012D | | |
| RL84 | 6330001780 | REL | FTR-MYAA012D | | |
| J1 | 6510017930 | CON | 1771P145-20 | | |
| J2 | 6510028210 | CON | SJ050010 (TMP-J01X-V6) | | |
| J3 | 6510028210 | CON | SJ050010 (TMP-J01X-V6) | | |
| J4 | 6510019971 | S.CON | 52808-1071 | T | 153.1/22.0 |
| J51 | 6510000410 | CON | MR-DS-E 02 <SSC> | | |
| J61 | 6510000410 | CON | MR-DS-E 02 <SSC> | | |
| J71 | 6510000410 | CON | MR-DS-E 02 <SSC> | | |
| J81 | 6510000410 | CON | MR-DS-E 02 <SSC> | | |

## [OSC UNIT]

| REF NO. | PARTS NO. | DESCRIPTION | | M. | H/V LOCATION |
|---|---|---|---|---|---|
| IC10 | 1180002610 | S.REG | BA12FP-E2 | T | 37.9/20.1 |
| IC91 | 1190002001 | S.IC | AD5260BRUZ50 <FE> | T | 26.9/12.1 |
| IC92 | 1130007111 | S.IC | TC7W04FU F | T | 23.8/6.2 |
| Q10 | 1590000680 | S.TRA | DTC114EUA T106 | T | 32.5/35.1 |
| Q11 | 1590000680 | S.TRA | DTC114EUA T106 | T | 22.2/42.4 |
| Q12 | 1590000680 | S.TRA | DTC114EUA T106 | T | 29.1/41.5 |
| Q13 | 1590000680 | S.TRA | DTC114EUA T106 | T | 31.6/41.6 |
| Q21 | 1530002060 | S.TRA | 2SC4081 T106 R | T | 11.3/6.4 |
| Q22 | 1530002601 | S.TRA | 2SC4215-O(TE85RF) | T | 10.4/17.9 |
| Q23 | 1590000680 | S.TRA | DTC114EUA T106 | T | 13.0/11.0 |
| Q42 | 1530002601 | S.TRA | 2SC4215-O(TE85RF) | T | 18.9/18.8 |
| Q43 | 1590000680 | S.TRA | DTC114EUA T106 | T | 19.6/11.7 |
| Q61 | 1530002060 | S.TRA | 2SC4081 T106 R | T | 26.2/36.1 |
| Q62 | 1530002060 | S.TRA | 2SC4081 T106 R | T | 20.7/38.6 |
| Q70 | 1530002060 | S.TRA | 2SC4081 T106 R | T | 10.0/41.2 |
| Q101 | 1530002700 | S.TRA | 2SC4097 T106Q | T | 36.8/40.1 |
| D10 | 1790001251 | S.DIO | MA2S1110GL | T | 31.5/31.8 |
| D11 | 1790001251 | S.DIO | MA2S1110GL | T | 16.5/38.3 |
| D71 | 1750000381 | S.DIO | 1SS312 (TE85LF) | T | 29.9/35.0 |
| D72 | 1750000381 | S.DIO | 1SS312 (TE85LF) | T | 29.9/37.6 |
| X1 | 6050012210 | XTA | CR-772 OCVXO-148A | | |
| L1 | 6200003950 | S.COI | HF50ACC 322513-T | T | 155.8/27.5 |
| L2 | 6200003950 | S.COI | HF50ACC 322513-T | T | 54.5/77.8 |
| L20 | 6200005491 | S.COI | NLV32T-331J | T | 14.7/2.0 |
| L21 | 6200003261 | S.COI | NLV32T-101J | T | 6.9/11.3 |
| L22 | 6200003261 | S.COI | NLV32T-101J | T | 8.0/14.7 |
| L23 | 6200003041 | S.COI | NLV32T-R68J | T | 6.9/20.4 |
| L24 | 6200003051 | S.COI | NLV32T-R82J | T | 6.3/23.8 |
| L41 | 6200003261 | S.COI | NLV32T-101J | T | 15.3/13.8 |
| L42 | 6200003261 | S.COI | NLV32T-101J | T | 14.7/17.2 |
| L43 | 6200003041 | S.COI | NLV32T-R68J | T | 15.4/22.4 |
| L44 | 6200003051 | S.COI | NLV32T-R82J | T | 18.8/24.3 |
| L61 | 6150004170 | COI | LS-476 | | |
| L62 | 6150004170 | COI | LS-476 | | |
| L91 | 6200003950 | S.COI | HF50ACC 322513-T | T | 23.7/20.3 |
| L92 | 6200003950 | S.COI | HF50ACC 322513-T | T | 19.5/4.4 |
| R1 | 7030003440 | S.RES | ERJ3GEYJ 102 V (1K) | T | 32.4/44.3 |
| R2 | 7030003440 | S.RES | ERJ3GEYJ 102 V (1K) | T | 29.8/44.3 |
| R3 | 7030003440 | S.RES | ERJ3GEYJ 102 V (1K) | T | 25.9/44.2 |
| R11 | 7030003200 | S.RES | ERJ3GEYJ 100 V (10) | T | 33.4/32.3 |
| R12 | 7030003200 | S.RES | ERJ3GEYJ 100 V (10) | T | 16.7/40.3 |
| R13 | 7030003440 | S.RES | ERJ3GEYJ 102 V (1K) | T | 16.9/11.6 |
| R20 | 7030003240 | S.RES | ERJ3GEYJ 220 V (22) | T | 11.4/1.9 |
| R21 | 7030003560 | S.RES | ERJ3GEYJ 103 V (10K) | T | 11.2/4.5 |
| R22 | 7030003370 | S.RES | ERJ3GEYJ 271 V (270) | T | 15.6/7.9 |
| R23 | 7030004040 | S.RES | ERJ3GEYJ 4R7 V (4.7) | T | 11.4/14.0 |
| R24 | 7030003370 | S.RES | ERJ3GEYJ 271 V (270) | T | 12.3/17.7 |
| R25 | 7030003500 | S.RES | ERJ3GEYJ 332 V (3.3K) | T | 10.1/14.2 |
| R26 | 7030003480 | S.RES | ERJ3GEYJ 222 V (2.2K) | T | 12.9/9.1 |
| R27 | 7030003360 | S.RES | ERJ3GEYJ 221 V (220) | T | 5.8/14.0 |
| R28 | 7030003440 | S.RES | ERJ3GEYJ 102 V (1K) | T | 10.3/12.0 |
| R43 | 7030003240 | S.RES | ERJ3GEYJ 220 V (22) | T | 19.8/14.2 |
| R44 | 7030003370 | S.RES | ERJ3GEYJ 271 V (270) | T | 20.8/18.7 |
| R45 | 7030003500 | S.RES | ERJ3GEYJ 332 V (3.3K) | T | 17.9/15.2 |
| R46 | 7030003480 | S.RES | ERJ3GEYJ 222 V (2.2K) | T | 19.5/9.8 |
| R47 | 7030003290 | S.RES | ERJ3GEYJ 560 V (56) | T | 16.9/17.9 |
| R61 | 7030003240 | S.RES | ERJ3GEYJ 220 V (22) | T | 22.3/35.4 |
| R62 | 7030003560 | S.RES | ERJ3GEYJ 103 V (10K) | T | 26.3/34.2 |
| R63 | 7030003380 | S.RES | ERJ3GEYJ 331 V (330) | T | 26.0/38.0 |
| R64 | 7030003280 | S.RES | ERJ3GEYJ 470 V (47) | T | 20.8/40.5 |
| R65 | 7030003400 | S.RES | ERJ3GEYJ 471 V (470) | T | 20.0/34.9 |
| R67 | 7030003560 | S.RES | ERJ3GEYJ 103 V (10K) | T | 19.7/36.7 |
| R68 | 7030003550 | S.RES | ERJ3GEYJ 822 V (8.2K) | T | 22.3/36.7 |
| R71 | 7030003340 | S.RES | ERJ3GEYJ 151 V (150) | T | 32.7/38.3 |
| R72 | 7030003270 | S.RES | ERJ3GEYJ 390 V (39) | T | 31.2/39.6 |
| R73 | 7030003340 | S.RES | ERJ3GEYJ 151 V (150) | T | 28.6/39.5 |
| R75 | 7030003280 | S.RES | ERJ3GEYJ 470 V (47) | T | 16.3/43.1 |
| R77 | 7030003320 | S.RES | ERJ3GEYJ 101 V (100) | T | 12.6/44.7 |
| R78 | 7030003470 | S.RES | ERJ3GEYJ 182 V (1.8K) | T | 8.0/41.1 |
| R79 | 7030003480 | S.RES | ERJ3GEYJ 222 V (2.2K) | T | 6.2/41.6 |
| R80 | 7030003360 | S.RES | ERJ3GEYJ 221 V (220) | T | 11.9/41.1 |
| R82 | 7030003280 | S.RES | ERJ3GEYJ 470 V (47) | T | 17.6/43.1 |
| R91 | 7030006091 | S.RES | ERA3YED 822V (8.2K) | T | 19.6/7.2 |
| R92 | 7030005341 | S.RES | ERA3YED 332V (3.3K) | T | 19.6/8.5 |
| R93 | 7030003560 | S.RES | ERJ3GEYJ 103 V (10K) | T | 25.6/1.5 |
| R94 | 7030003540 | S.RES | ERJ3GEYJ 682 V (6.8K) | T | 25.6/2.8 |
| R95 | 7030003320 | S.RES | ERJ3GEYJ 101 V (100) | T | 22.5/16.7 |
| R96 | 7030003440 | S.RES | ERJ3GEYJ 102 V (1K) | T | 32.0/14.2 |
| R97 | 7030003440 | S.RES | ERJ3GEYJ 102 V (1K) | T | 28.7/16.2 |
| R98 | 7030003640 | S.RES | ERJ3GEYJ 473 V (47K) | T | 27.4/16.2 |
| R99 | 7030003480 | S.RES | ERJ3GEYJ 222 V (2.2K) | T | 22.5/10.1 |
| R100 | 7030003640 | S.RES | ERJ3GEYJ 473 V (47K) | T | 27.2/6.5 |
| R101 | 7030003360 | S.RES | ERJ3GEYJ 221 V (220) | T | 36.9/38.2 |
| R102 | 7030005981 | S.RES | ERA3YED 333V (33K) | T | 32.4/6.8 |
| C1 | 4030006880 | S.CER | C1608 JB 1H 472K-T | T | 39.6/47.7 |
| C2 | 4030006880 | S.CER | C1608 JB 1H 472K-T | T | 31.1/44.3 |
| C3 | 4030006880 | S.CER | C1608 JB 1H 472K-T | T | 33.7/44.1 |
| C4 | 4030006880 | S.CER | C1608 JB 1H 472K-T | T | 30.6/8.7 |
| C5 | 4510008550 | S.ELE | EEE1HA010SR | T | 30.6/2.6 |
| C6 | 4030006880 | S.CER | C1608 JB 1H 472K-T | T | 35.1/3.4 |
| C7 | 4510008550 | S.ELE | EEE1HA010SR | T | 38.8/2.7 |
| C8 | 4030011600 | S.CER | C1608 JB 1E 104K-T | T | 17.3/2.1 |
| C9 | 4030006880 | S.CER | C1608 JB 1H 472K-T | T | 27.2/43.2 |

Eqv.= This component is equivalent to the REF No. component listed above, and may be substituted on parts orders and repairs.

M.=Mounted side (T: Mounted on the Top side, B: Mounted on the Bottom side)
S.=Surface mount

## [OSC UNIT]

| REF NO. | PARTS NO. | DESCRIPTION | M. | H/V LOCATION |
|---|---|---|---|---|
| C10 | 4510008680 | S.ELE EEE1EA220SP | T | 29.8/21.4 |
| C11 | 4030004760 | S.CER C2012 JF 1H 104Z-T | T | 35.9/13.1 |
| C12 | 4030006880 | S.CER C1608 JB 1H 472K-T | T | 39.3/12.8 |
| C13 | 4510008680 | S.ELE EEE1EA220SP | T | 37.2/8.6 |
| C14 | 4030006880 | S.CER C1608 JB 1H 472K-T | T | 94.8/34.0 |
| C15 | 4030011600 | S.CER C1608 JB 1E 104K-T | T | 39.3/14.1 |
| C16 | 4030011600 | S.CER C1608 JB 1E 104K-T | T | 29.6/32.3 |
| C17 | 4030011600 | S.CER C1608 JB 1E 104K-T | T | 19.4/41.8 |
| C18 | 4030011600 | S.CER C1608 JB 1E 104K-T | T | 17.8/38.3 |
| C19 | 4030011600 | S.CER C1608 JB 1E 104K-T | T | 31.5/33.1 |
| C20 | 4030011600 | S.CER C1608 JB 1E 104K-T | T | 13.4/5.2 |
| C21 | 4030011600 | S.CER C1608 JB 1E 104K-T | T | 11.4/3.2 |
| C22 | 4030011600 | S.CER C1608 JB 1E 104K-T | T | 15.0/11.1 |
| C23 | 4030011600 | S.CER C1608 JB 1E 104K-T | T | 12.0/15.9 |
| C24 | 4030011600 | S.CER C1608 JB 1E 104K-T | T | 12.7/14.0 |
| C25 | 4030011600 | S.CER C1608 JB 1E 104K-T | T | 10.3/19.9 |
| C26 | 4030017800 | S.CER C1608 CH 1H 561J-T | T | 10.3/21.2 |
| C27 | 4030007120 | S.CER C1608 CH 1H 820J-T | T | 7.8/18.2 |
| C28 | 4030011340 | S.CER C1608 CH 1H 471J-T | T | 9.0/22.5 |
| C29 | 4030011330 | S.CER C1608 CH 1H 391J-T | T | 10.3/23.8 |
| C30 | 4030007050 | S.CER C1608 CH 1H 220J-T | T | 8.4/24.5 |
| C31 | 4030017800 | S.CER C1608 CH 1H 561J-T | T | 10.3/25.1 |
| C32 | 4030011600 | S.CER C1608 JB 1E 104K-T | T | 10.8/9.2 |
| C33 | 4030011600 | S.CER C1608 JB 1E 104K-T | T | 9.5/10.1 |
| C42 | 4030011600 | S.CER C1608 JB 1E 104K-T | T | 21.6/12.7 |
| C43 | 4030011600 | S.CER C1608 JB 1E 104K-T | T | 20.1/16.8 |
| C44 | 4030011600 | S.CER C1608 JB 1E 104K-T | T | 20.0/15.5 |
| C45 | 4030011600 | S.CER C1608 JB 1E 104K-T | T | 13.2/20.6 |
| C46 | 4030017800 | S.CER C1608 CH 1H 561J-T | T | 15.1/19.8 |
| C47 | 4030007120 | S.CER C1608 CH 1H 820J-T | T | 13.2/23.2 |
| C48 | 4030011340 | S.CER C1608 CH 1H 471J-T | T | 17.5/21.6 |
| C49 | 4030011330 | S.CER C1608 CH 1H 391J-T | T | 18.8/21.6 |
| C50 | 4030007050 | S.CER C1608 CH 1H 220J-T | T | 20.7/22.1 |
| C51 | 4030017800 | S.CER C1608 CH 1H 561J-T | T | 21.7/24.4 |
| C52 | 4030011600 | S.CER C1608 JB 1E 104K-T | T | 17.6/8.9 |
| C53 | 4030011600 | S.CER C1608 JB 1E 104K-T | T | 16.3/9.8 |
| C61 | 4030011600 | S.CER C1608 JB 1E 104K-T | T | 26.3/32.9 |
| C62 | 4030011600 | S.CER C1608 JB 1E 104K-T | T | 24.1/36.2 |
| C63 | 4030011600 | S.CER C1608 JB 1E 104K-T | T | 26.0/39.3 |
| C64 | 4030011600 | S.CER C1608 JB 1E 104K-T | T | 22.8/34.1 |
| C66 | 4030007010 | S.CER C1608 CH 1H 100D-T | T | 12.9/25.1 |
| C67 | 4030011600 | S.CER C1608 JB 1E 104K-T | T | 17.1/35.4 |
| C71 | 4030006880 | S.CER C1608 JB 1H 472K-T | T | 33.8/39.6 |
| C72 | 4030006880 | S.CER C1608 JB 1H 472K-T | T | 14.4/45.4 |
| C73 | 4030006880 | S.CER C1608 JB 1H 472K-T | T | 6.2/40.3 |
| C74 | 4030006880 | S.CER C1608 JB 1H 472K-T | T | 10.0/43.2 |
| C75 | 4030006880 | S.CER C1608 JB 1H 472K-T | T | 13.2/41.0 |
| C76 | 4030006880 | S.CER C1608 JB 1H 472K-T | T | 19.4/45.4 |
| C77 | 4030011600 | S.CER C1608 JB 1E 104K-T | T | 10.7/44.7 |
| C91 | 4030006880 | S.CER C1608 JB 1H 472K-T | T | 25.5/16.5 |
| C92 | 4030006880 | S.CER C1608 JB 1H 472K-T | T | 17.3/4.7 |
| C93 | 4030006880 | S.CER C1608 JB 1H 472K-T | T | 22.2/2.8 |
| C94 | 4030006880 | S.CER C1608 JB 1H 472K-T | T | 28.0/8.7 |
| C101 | 4550007260 | S.TAN F931C475MAABMA | T | 40.1/38.9 |
| Eqv. | 4550006480 | S.TAN TEESVA 1C 475M8R | | |
| RL10 | 6330001750 | REL FTR-B4CA012Z | | |
| RL11 | 6330001750 | REL FTR-B4CA012Z | | |
| J2 | 6510019971 | S.CON 52808-1071 | T | 30.6/48.8 |
| J71 | 6510028210 | CON SJ050010 (TMP-J01X-V6) | | |
| J72 | 6510028210 | CON SJ050010 (TMP-J01X-V6) | | |
| J73 | 6510028210 | CON SJ050010 (TMP-J01X-V6) | | |

## [REG UNIT]

| REF NO. | PARTS NO. | DESCRIPTION | M. | H/V LOCATION |
|---|---|---|---|---|
| EP1 | 6910016052 | UNI FP2212B-2 FCC ROHS [USA] | | |
| | 6910016062 | UNI FP2212C-2 RTTE ROHS [EUR] | | |
| | 6910016062 | UNI FP2212C-2 RTTE ROHS [UK] | | |

Eqv.= This component is equivalent to the REF No. component listed above, and may be substituted on parts orders and repairs.

M.=Mounted side (T: Mounted on the Top side, B: Mounted on the Bottom side)
S.=Surface mount

## [DIGISEL UNIT]

| REF NO. | PARTS NO. | DESCRIPTION | | M. | H/V LOCATION |
|---|---|---|---|---|---|
| IC1 | 1130014370 | S.IC | CAT24C256XI-T2 | B | 18.9/52.0 |
| IC4 | 1130011510 | S.IC | BU2099FV-E2 | T | 29.9/55.8 |
| IC5 | 1130011510 | S.IC | BU2099FV-E2 | T | 18.5/55.8 |
| IC501 | 1130014370 | S.IC | CAT24C256XI-T2 | B | 17.5/26.5 |
| IC504 | 1130011510 | S.IC | BU2099FV-E2 | T | 28.3/29.2 |
| IC505 | 1130011510 | S.IC | BU2099FV-E2 | T | 18.1/29.3 |
| Q701 | 1530003852 | S.TRA | 2SC5551A-F-TD-E | T | 49.7/21.3 |
| D51 | 1750000550 | S.DIO | 1SS355 TE-17 | B | 60.7/57.2 |
| D52 | 1750000550 | S.DIO | 1SS355 TE-17 | B | 61.6/44.8 |
| D53 | 1750000550 | S.DIO | 1SS355 TE-17 | T | 53.1/59.2 |
| D54 | 1750000550 | S.DIO | 1SS355 TE-17 | B | 90.2/68.2 |
| D55 | 1750000550 | S.DIO | 1SS355 TE-17 | B | 69.5/68.4 |
| D56 | 1750000550 | S.DIO | 1SS355 TE-17 | B | 67.3/55.1 |
| D57 | 1750000550 | S.DIO | 1SS355 TE-17 | T | 66.0/48.7 |
| D58 | 1750000550 | S.DIO | 1SS355 TE-17 | B | 114.3/50.2 |
| D59 | 1750000550 | S.DIO | 1SS355 TE-17 | B | 90.5/51.0 |
| D60 | 1750000550 | S.DIO | 1SS355 TE-17 | B | 90.5/54.4 |
| D61 | 1750000550 | S.DIO | 1SS355 TE-17 | B | 114.3/53.5 |
| D62 | 1750000550 | S.DIO | 1SS355 TE-17 | B | 138.2/50.2 |
| D63 | 1750000550 | S.DIO | 1SS355 TE-17 | T | 79.1/43.6 |
| D64 | 1750000550 | S.DIO | 1SS355 TE-17 | T | 128.9/56.0 |
| D65 | 1750000550 | S.DIO | 1SS355 TE-17 | T | 128.9/57.8 |
| D66 | 1750000550 | S.DIO | 1SS355 TE-17 | T | 128.9/59.6 |
| D67 | 1750000550 | S.DIO | 1SS355 TE-17 | T | 128.9/61.4 |
| D68 | 1750000550 | S.DIO | 1SS355 TE-17 | T | 128.9/63.2 |
| D69 | 1750000550 | S.DIO | 1SS355 TE-17 | B | 183.4/63.0 |
| D70 | 1750000550 | S.DIO | 1SS355 TE-17 | B | 162.1/61.3 |
| D71 | 1750000550 | S.DIO | 1SS355 TE-17 | T | 68.8/21.5 |
| D72 | 1750000550 | S.DIO | 1SS355 TE-17 | T | 61.6/43.0 |
| D73 | 1750000550 | S.DIO | 1SS355 TE-17 | T | 65.8/43.4 |
| D74 | 1750000550 | S.DIO | 1SS355 TE-17 | B | 114.3/61.4 |
| D75 | 1750000550 | S.DIO | 1SS355 TE-17 | B | 90.5/59.1 |
| D201 | 1710001240 | DIO | L204BBB | | |
| D202 | 1710001240 | DIO | L204BBB | | |
| D203 | 1750000550 | S.DIO | 1SS355 TE-17 | B | 48.3/73.3 |
| D204 | 1750000550 | S.DIO | 1SS355 TE-17 | B | 46.1/73.3 |
| D205 | 1750000550 | S.DIO | 1SS355 TE-17 | B | 44.8/69.7 |
| D521 | 1750000550 | S.DIO | 1SS355 TE-17 | B | 25.0/35.2 |
| D551 | 1750000550 | S.DIO | 1SS355 TE-17 | B | 63.7/9.2 |
| D552 | 1750000550 | S.DIO | 1SS355 TE-17 | B | 61.7/23.0 |
| D553 | 1750000550 | S.DIO | 1SS355 TE-17 | B | 58.0/8.5 |
| D554 | 1750000550 | S.DIO | 1SS355 TE-17 | B | 91.0/12.8 |
| D555 | 1750000550 | S.DIO | 1SS355 TE-17 | T | 68.6/11.7 |
| D556 | 1750000550 | S.DIO | 1SS355 TE-17 | B | 67.2/24.9 |
| D557 | 1750000550 | S.DIO | 1SS355 TE-17 | B | 70.2/36.4 |
| D558 | 1750000550 | S.DIO | 1SS355 TE-17 | B | 114.3/27.1 |
| D559 | 1750000550 | S.DIO | 1SS355 TE-17 | B | 90.6/26.8 |
| D560 | 1750000550 | S.DIO | 1SS355 TE-17 | B | 90.6/30.3 |
| D561 | 1750000550 | S.DIO | 1SS355 TE-17 | B | 114.3/30.5 |
| D562 | 1750000550 | S.DIO | 1SS355 TE-17 | B | 138.2/27.1 |
| D563 | 1750000550 | S.DIO | 1SS355 TE-17 | B | 138.2/30.5 |
| D564 | 1750000550 | S.DIO | 1SS355 TE-17 | B | 162.1/27.1 |
| D565 | 1750000550 | S.DIO | 1SS355 TE-17 | B | 162.1/30.6 |
| D566 | 1750000550 | S.DIO | 1SS355 TE-17 | B | 182.5/33.5 |
| D567 | 1750000550 | S.DIO | 1SS355 TE-17 | B | 114.3/19.6 |
| D568 | 1750000550 | S.DIO | 1SS355 TE-17 | B | 90.7/19.6 |
| D569 | 1750000550 | S.DIO | 1SS355 TE-17 | B | 183.6/17.1 |
| D570 | 1750000550 | S.DIO | 1SS355 TE-17 | B | 162.1/19.7 |
| D571 | 1750000550 | S.DIO | 1SS355 TE-17 | B | 162.1/23.5 |
| D572 | 1750000550 | S.DIO | 1SS355 TE-17 | B | 138.2/23.5 |
| D573 | 1750000550 | S.DIO | 1SS355 TE-17 | B | 138.2/19.6 |
| D574 | 1750000550 | S.DIO | 1SS355 TE-17 | B | 114.3/23.4 |
| D575 | 1750000550 | S.DIO | 1SS355 TE-17 | B | 90.7/22.9 |
| D701 | 1710001240 | DIO | L204BBB | | |
| D702 | 1710001240 | DIO | L204BBB | | |
| D703 | 1750000550 | S.DIO | 1SS355 TE-17 | B | 47.0/9.0 |
| D704 | 1750000550 | S.DIO | 1SS355 TE-17 | B | 44.9/9.0 |
| D705 | 1750000550 | S.DIO | 1SS355 TE-17 | T | 51.8/34.3 |
| L1 | 6200003261 | S.COI | NLV32T-101J | T | 38.9/43.7 |
| L2 | 6200003950 | S.COI | HF50ACC 322513-T | T | 35.9/43.7 |
| L3 | 6200003261 | S.COI | NLV32T-101J | T | 14.7/23.0 |
| L4 | 6200003261 | S.COI | NLV32T-101J | B | 4.6/44.0 |
| L101 | 6140003980 | COI | LR-476 | | |
| L102 | 6140003990 | COI | LR-477 | | |
| L103 | 6140004001 | COI | LR-478A | | |
| L104 | 6140004010 | COI | LR-479 | | |
| L105 | 6140004020 | COI | LR-480 | | |
| L106 | 6140004030 | COI | LR-481 | | |
| L107 | 6110003930 | COI | LA-595 | | |
| L201 | 6180000920 | COI | LAL 03NA 221K | | |
| L203 | 6140003940 | COI | LR-493 | | |
| L503 | 6200003261 | S.COI | NLV32T-101J | B | 4.6/36.0 |
| L504 | 6200003261 | S.COI | NLV32T-101J | B | 4.6/32.0 |
| L601 | 6140003980 | COI | LR-476 | | |
| L602 | 6140003990 | COI | LR-477 | | |
| L603 | 6140004001 | COI | LR-478A | | |
| L604 | 6140004010 | COI | LR-479 | | |
| L605 | 6140004020 | COI | LR-480 | | |
| L606 | 6140004030 | COI | LR-481 | | |
| L607 | 6110003930 | COI | LA-595 | | |
| L701 | 6180000920 | COI | LAL 03NA 221K | | |
| L703 | 6140003940 | COI | LR-493 | | |
| R1 | 7030003680 | S.RES | ERJ3GEYJ 104 V (100K) | B | 17.4/60.8 |
| R2 | 7030003560 | S.RES | ERJ3GEYJ 103 V (10K) | B | 12.6/54.5 |
| R3 | 7030003560 | S.RES | ERJ3GEYJ 103 V (10K) | T | 26.1/51.6 |
| R4 | 7030003440 | S.RES | ERJ3GEYJ 102 V (1K) | T | 14.3/47.4 |
| R5 | 7030003440 | S.RES | ERJ3GEYJ 102 V (1K) | T | 15.7/44.8 |

## [DIGISEL UNIT]

| REF NO. | PARTS NO. | DESCRIPTION | | M. | H/V LOCATION |
|---|---|---|---|---|---|
| R6 | 7030003440 | S.RES | ERJ3GEYJ 102 V (1K) | T | 15.1/46.1 |
| R7 | 7030003440 | S.RES | ERJ3GEYJ 102 V (1K) | T | 4.0/52.9 |
| R8 | 7030003440 | S.RES | ERJ3GEYJ 102 V (1K) | T | 13.3/51.9 |
| R9 | 7030003360 | S.RES | ERJ3GEYJ 221 V (220) | B | 32.0/45.9 |
| R10 | 7030003360 | S.RES | ERJ3GEYJ 221 V (220) | T | 34.6/60.0 |
| R35 | 7030003360 | S.RES | ERJ3GEYJ 221 V (220) | T | 27.9/62.4 |
| R36 | 7030003360 | S.RES | ERJ3GEYJ 221 V (220) | T | 28.6/65.8 |
| R37 | 7030003360 | S.RES | ERJ3GEYJ 221 V (220) | T | 29.3/62.4 |
| R38 | 7030003360 | S.RES | ERJ3GEYJ 221 V (220) | T | 30.0/65.8 |
| R39 | 7030003360 | S.RES | ERJ3GEYJ 221 V (220) | T | 30.7/62.4 |
| R40 | 7030003360 | S.RES | ERJ3GEYJ 221 V (220) | T | 26.5/62.4 |
| R41 | 7030003360 | S.RES | ERJ3GEYJ 221 V (220) | T | 27.2/65.8 |
| R42 | 7030003360 | S.RES | ERJ3GEYJ 221 V (220) | T | 25.8/65.8 |
| R43 | 7030003360 | S.RES | ERJ3GEYJ 221 V (220) | T | 25.1/62.4 |
| R44 | 7030003360 | S.RES | ERJ3GEYJ 221 V (220) | T | 24.4/65.8 |
| R45 | 7030003360 | S.RES | ERJ3GEYJ 221 V (220) | T | 23.7/62.4 |
| R46 | 7030003360 | S.RES | ERJ3GEYJ 221 V (220) | T | 23.0/65.8 |
| R47 | 7030003360 | S.RES | ERJ3GEYJ 221 V (220) | T | 21.2/62.4 |
| R48 | 7030003360 | S.RES | ERJ3GEYJ 221 V (220) | T | 19.1/65.8 |
| R49 | 7030003360 | S.RES | ERJ3GEYJ 221 V (220) | T | 18.4/62.4 |
| R50 | 7030003360 | S.RES | ERJ3GEYJ 221 V (220) | T | 19.8/62.4 |
| R51 | 7030003360 | S.RES | ERJ3GEYJ 221 V (220) | T | 20.5/65.8 |
| R52 | 7030003360 | S.RES | ERJ3GEYJ 221 V (220) | T | 15.6/62.4 |
| R53 | 7030003360 | S.RES | ERJ3GEYJ 221 V (220) | T | 14.9/65.8 |
| R54 | 7030003360 | S.RES | ERJ3GEYJ 221 V (220) | T | 14.2/62.4 |
| R55 | 7030003360 | S.RES | ERJ3GEYJ 221 V (220) | T | 16.3/65.8 |
| R56 | 7030003360 | S.RES | ERJ3GEYJ 221 V (220) | T | 17.0/62.4 |
| R57 | 7030003360 | S.RES | ERJ3GEYJ 221 V (220) | T | 17.7/65.8 |
| R58 | 7030003360 | S.RES | ERJ3GEYJ 221 V (220) | T | 20.9/46.4 |
| R59 | 7030003440 | S.RES | ERJ3GEYJ 102 V (1K) | T | 14.9/49.7 |
| R100 | 7030000010 | S.RES | MCR10EZHJ JPW (000) | B | 26.0/47.3 |
| R104 | 7030003560 | S.RES | ERJ3GEYJ 103 V (10K) | B | 145.1/64.1 |
| R105 | 7030003560 | S.RES | ERJ3GEYJ 103 V (10K) | B | 131.1/62.7 |
| R201 | 7030000380 | S.RES | MCR10EZHJ 1 K (102) | B | 49.4/55.6 |
| R202 | 7030000290 | S.RES | MCR10EZHJ 180 (181) | B | 49.4/51.8 |
| R203 | 7030000220 | S.RES | MCR10EZHJ 47 (470) | B | 49.4/53.7 |
| R204 | 7030003360 | S.RES | ERJ3GEYJ 221 V (220) | B | 48.2/69.7 |
| R205 | 7030003350 | S.RES | ERJ3GEYJ 181 V (180) | T | 54.5/46.5 |
| R206 | 7030003370 | S.RES | ERJ3GEYJ 271 V (270) | B | 49.4/48.7 |
| R207 | 7030003560 | S.RES | ERJ3GEYJ 103 V (10K) | T | 57.6/48.7 |
| R208 | 7030000200 | S.RES | MCR10EZHJ 33 (330) | B | 45.4/56.9 |
| R209 | 7030003240 | S.RES | ERJ3GEYJ 220 V (22) | T | 44.2/53.9 |
| R210 | 7030003370 | S.RES | ERJ3GEYJ 271 V (270) | B | 45.2/49.5 |
| R211 | 7030003370 | S.RES | ERJ3GEYJ 271 V (270) | B | 45.2/50.8 |
| R213 | 7030000220 | S.RES | MCR10EZHJ 47 (470) | B | 38.1/55.9 |
| R214 | 7030003460 | S.RES | ERJ3GEYJ 152 V (1.5K) | B | 51.6/60.0 |
| R215 | 7030003460 | S.RES | ERJ3GEYJ 152 V (1.5K) | B | 52.4/58.0 |
| R216 | 7030003680 | S.RES | ERJ3GEYJ 104 V (100K) | B | 17.4/66.4 |
| R501 | 7030003680 | S.RES | ERJ3GEYJ 104 V (100K) | B | 14.5/21.2 |
| R502 | 7030003560 | S.RES | ERJ3GEYJ 103 V (10K) | B | 25.8/25.3 |
| R503 | 7030003560 | S.RES | ERJ3GEYJ 103 V (10K) | B | 24.5/25.3 |
| R504 | 7030003440 | S.RES | ERJ3GEYJ 102 V (1K) | B | 9.7/44.6 |
| R505 | 7030003440 | S.RES | ERJ3GEYJ 102 V (1K) | T | 9.3/42.6 |
| R506 | 7030003440 | S.RES | ERJ3GEYJ 102 V (1K) | T | 3.7/28.1 |
| R507 | 7030003440 | S.RES | ERJ3GEYJ 102 V (1K) | B | 4.4/28.0 |
| R508 | 7030003440 | S.RES | ERJ3GEYJ 102 V (1K) | T | 12.9/30.8 |
| R509 | 7030003360 | S.RES | ERJ3GEYJ 221 V (220) | T | 31.1/34.8 |
| R510 | 7030003360 | S.RES | ERJ3GEYJ 221 V (220) | T | 32.2/21.9 |
| R535 | 7030003360 | S.RES | ERJ3GEYJ 221 V (220) | T | 26.4/21.9 |
| R536 | 7030003360 | S.RES | ERJ3GEYJ 221 V (220) | T | 25.7/19.0 |
| R537 | 7030003360 | S.RES | ERJ3GEYJ 221 V (220) | T | 23.6/21.9 |
| R538 | 7030003360 | S.RES | ERJ3GEYJ 221 V (220) | T | 24.3/19.0 |
| R539 | 7030003360 | S.RES | ERJ3GEYJ 221 V (220) | T | 25.0/21.9 |
| R540 | 7030003360 | S.RES | ERJ3GEYJ 221 V (220) | T | 30.1/19.0 |
| R541 | 7030003360 | S.RES | ERJ3GEYJ 221 V (220) | T | 29.4/21.9 |
| R542 | 7030003360 | S.RES | ERJ3GEYJ 221 V (220) | T | 28.7/19.0 |
| R543 | 7030003360 | S.RES | ERJ3GEYJ 221 V (220) | T | 27.9/21.9 |
| R544 | 7030003360 | S.RES | ERJ3GEYJ 221 V (220) | T | 27.2/19.0 |
| R545 | 7030003360 | S.RES | ERJ3GEYJ 221 V (220) | T | 30.8/21.9 |
| R546 | 7030003360 | S.RES | ERJ3GEYJ 221 V (220) | T | 31.5/19.0 |
| R547 | 7030003360 | S.RES | ERJ3GEYJ 221 V (220) | T | 18.0/21.9 |
| R548 | 7030003360 | S.RES | ERJ3GEYJ 221 V (220) | T | 17.3/19.1 |
| R549 | 7030003360 | S.RES | ERJ3GEYJ 221 V (220) | T | 15.2/21.9 |
| R550 | 7030003360 | S.RES | ERJ3GEYJ 221 V (220) | T | 16.6/21.9 |
| R551 | 7030003360 | S.RES | ERJ3GEYJ 221 V (220) | T | 15.9/19.1 |
| R552 | 7030003360 | S.RES | ERJ3GEYJ 221 V (220) | T | 20.1/19.2 |
| R553 | 7030003360 | S.RES | ERJ3GEYJ 221 V (220) | T | 19.4/21.9 |
| R554 | 7030003360 | S.RES | ERJ3GEYJ 221 V (220) | T | 18.7/19.1 |
| R555 | 7030003360 | S.RES | ERJ3GEYJ 221 V (220) | T | 20.9/21.9 |
| R556 | 7030003360 | S.RES | ERJ3GEYJ 221 V (220) | T | 21.6/19.2 |
| R557 | 7030003360 | S.RES | ERJ3GEYJ 221 V (220) | T | 22.3/21.9 |
| R558 | 7030003360 | S.RES | ERJ3GEYJ 221 V (220) | T | 23.5/34.2 |
| R600 | 7030000010 | S.RES | MCR10EZHJ JPW (000) | B | 30.9/33.9 |
| R604 | 7030003560 | S.RES | ERJ3GEYJ 103 V (10K) | B | 145.1/17.1 |
| R605 | 7030003560 | S.RES | ERJ3GEYJ 103 V (10K) | B | 129.1/17.1 |
| R701 | 7030000380 | S.RES | MCR10EZHJ 1 K (102) | T | 53.2/20.4 |
| R702 | 7030000290 | S.RES | MCR10EZHJ 180 (181) | T | 51.6/15.9 |
| R703 | 7030000220 | S.RES | MCR10EZHJ 47 (470) | T | 51.6/13.8 |
| R704 | 7030003360 | S.RES | ERJ3GEYJ 221 V (220) | T | 52.9/31.9 |
| R705 | 7030003350 | S.RES | ERJ3GEYJ 181 V (180) | B | 49.4/9.0 |
| R706 | 7030003370 | S.RES | ERJ3GEYJ 271 V (270) | B | 42.4/10.1 |
| R707 | 7030003560 | S.RES | ERJ3GEYJ 103 V (10K) | T | 51.3/12.2 |
| R708 | 7030000200 | S.RES | MCR10EZHJ 33 (330) | T | 43.8/25.6 |
| R709 | 7030003240 | S.RES | ERJ3GEYJ 220 V (22) | T | 46.5/19.8 |
| R710 | 7030003370 | S.RES | ERJ3GEYJ 271 V (270) | B | 45.6/19.4 |
| R711 | 7030003370 | S.RES | ERJ3GEYJ 271 V (270) | B | 45.6/21.0 |
| R713 | 7030000220 | S.RES | MCR10EZHJ 47 (470) | B | 38.8/27.4 |
| R714 | 7030003460 | S.RES | ERJ3GEYJ 152 V (1.5K) | T | 53.5/29.2 |
| R715 | 7030003460 | S.RES | ERJ3GEYJ 152 V (1.5K) | T | 51.6/30.0 |
| R716 | 7030003680 | S.RES | ERJ3GEYJ 104 V (100K) | B | 14.5/15.5 |
| C1 | 4030011600 | S.CER | C1608 JB 1E 104K-T | B | 15.3/55.5 |
| C2 | 4030011600 | S.CER | C1608 JB 1E 104K-T | T | 7.9/31.9 |
| C4 | 4030011600 | S.CER | C1608 JB 1E 104K-T | T | 31.8/50.7 |

Eqv.= This component is equivalent to the REF No. component listed above, and may be substituted on parts orders and repairs.

M.=Mounted side (T: Mounted on the Top side, B: Mounted on the Bottom side)
S.=Surface mount

## [DIGISEL UNIT]

| REF NO. | PARTS NO. | DESCRIPTION | M. | H/V LOCATION |
|---|---|---|---|---|
| C5 | 4030011600 | S.CER C1608 JB 1E 104K-T | T | 16.0/51.6 |
| C21 | 4030006880 | S.CER C1608 JB 1H 472K-T | B | 30.4/45.9 |
| C35 | 4030006880 | S.CER C1608 JB 1H 472K-T | T | 32.1/65.3 |
| C51 | 4030006880 | S.CER C1608 JB 1H 472K-T | B | 64.8/57.2 |
| C52 | 4030006880 | S.CER C1608 JB 1H 472K-T | T | 57.6/45.8 |
| C53 | 4030006880 | S.CER C1608 JB 1H 472K-T | T | 51.5/59.2 |
| C54 | 4030006880 | S.CER C1608 JB 1H 472K-T | T | 87.4/72.3 |
| C55 | 4030006880 | S.CER C1608 JB 1H 472K-T | B | 67.1/63.5 |
| C56 | 4030006880 | S.CER C1608 JB 1H 472K-T | T | 66.5/54.9 |
| C57 | 4030006880 | S.CER C1608 JB 1H 472K-T | B | 66.2/45.6 |
| C58 | 4030006880 | S.CER C1608 JB 1H 472K-T | T | 114.3/50.4 |
| C59 | 4030006880 | S.CER C1608 JB 1H 472K-T | T | 90.4/51.4 |
| C60 | 4030006880 | S.CER C1608 JB 1H 472K-T | T | 90.4/54.4 |
| C61 | 4030006880 | S.CER C1608 JB 1H 472K-T | T | 114.3/53.7 |
| C62 | 4030006880 | S.CER C1608 JB 1H 472K-T | T | 138.2/51.1 |
| C63 | 4030006880 | S.CER C1608 JB 1H 472K-T | T | 138.2/54.4 |
| C64 | 4030006880 | S.CER C1608 JB 1H 472K-T | T | 162.1/50.8 |
| C65 | 4030006880 | S.CER C1608 JB 1H 472K-T | T | 162.1/53.9 |
| C66 | 4030006880 | S.CER C1608 JB 1H 472K-T | B | 182.5/47.7 |
| C67 | 4030006880 | S.CER C1608 JB 1H 472K-T | T | 114.3/57.2 |
| C68 | 4030006880 | S.CER C1608 JB 1H 472K-T | T | 88.3/63.0 |
| C69 | 4030006880 | S.CER C1608 JB 1H 472K-T | B | 183.7/64.8 |
| C70 | 4030006880 | S.CER C1608 JB 1H 472K-T | T | 162.1/60.2 |
| C71 | 4030006880 | S.CER C1608 JB 1H 472K-T | T | 162.1/57.3 |
| C72 | 4030006880 | S.CER C1608 JB 1H 472K-T | T | 138.2/59.5 |
| C73 | 4030006880 | S.CER C1608 JB 1H 472K-T | T | 135.8/63.0 |
| C74 | 4030006880 | S.CER C1608 JB 1H 472K-T | T | 114.3/60.4 |
| C75 | 4030006880 | S.CER C1608 JB 1H 472K-T | T | 90.5/59.6 |
| C101 | 4030011340 | S.CER C1608 CH 1H 471J-T | T | 68.2/68.4 |
| C102 | 4030011280 | S.CER C1608 CH 1H 271J-T | T | 59.5/69.2 |
| C103 | 4030011280 | S.CER C1608 CH 1H 271J-T | T | 60.5/56.7 |
| C104 | 4030007130 | S.CER C1608 CH 1H 101J-T | T | 57.7/52.7 |
| C105 | 4030006940 | S.CER C1608 CH 1H 030C-T | B | 65.7/51.9 |
| C106 | 4030007150 | S.CER C1608 CH 1H 151J-T | B | 56.4/70.2 |
| C107 | 4030007150 | S.CER C1608 CH 1H 151J-T | B | 60.3/70.6 |
| C108 | 4030007150 | S.CER C1608 CH 1H 151J-T | B | 62.4/70.6 |
| C109 | 4030007150 | S.CER C1608 CH 1H 151J-T | B | 56.4/68.8 |
| C110 | 4030009520 | S.CER C1608 CH 1H 020B-T | T | 77.2/69.1 |
| C111 | 4030009550 | S.CER C1608 CH 1H 2R5B-T | T | 77.2/67.8 |
| C113 | 4030007000 | S.CER C1608 CH 1H 090D-T | T | 73.7/58.9 |
| C114 | 4030007040 | S.CER C1608 CH 1H 180J-T | T | 71.7/59.5 |
| C115 | 4030007040 | S.CER C1608 CH 1H 180J-T | T | 70.4/59.5 |
| C116 | 4030007040 | S.CER C1608 CH 1H 180J-T | T | 69.1/59.5 |
| C117 | 4030007070 | S.CER C1608 CH 1H 330J-T | T | 77.2/70.4 |
| C118 | 4030007090 | S.CER C1608 CH 1H 470J-T | B | 76.7/59.8 |
| C119 | 4030007040 | S.CER C1608 CH 1H 180J-T | B | 66.1/48.1 |
| C120 | 4030007040 | S.CER C1608 CH 1H 180J-T | B | 13.1/25.3 |
| C125 | 4030009550 | S.CER C1608 CH 1H 2R5B-T | B | 76.1/68.9 |
| C126 | 4030008360 | S.CER C1608 UJ 1H 101J-T | B | 124.5/63.3 |
| C128 | 4030009500 | S.CER C1608 CH 1H 0R5B-T | B | 107.2/55.4 |
| C129 | 4030009510 | S.CER C1608 CH 1H 010B-T | B | 83.2/55.8 |
| C130 | 4030009520 | S.CER C1608 CH 1H 020B-T | B | 97.6/55.5 |
| C131 | 4030009910 | S.CER C1608 CH 1H 040B-T | B | 121.5/55.6 |
| C132 | 4030006990 | S.CER C1608 CH 1H 080D-T | B | 131.0/55.6 |
| C133 | 4030007040 | S.CER C1608 CH 1H 180J-T | B | 145.4/55.7 |
| C134 | 4030008750 | S.CER C1608 CH 1H 360J-T | B | 154.9/55.7 |
| C135 | 4030007110 | S.CER C1608 CH 1H 680J-T | B | 169.3/55.7 |
| C136 | 4030007140 | S.CER C1608 CH 1H 121J-T | B | 178.8/55.7 |
| C137 | 4030007140 | S.CER C1608 CH 1H 121J-T | B | 107.4/63.8 |
| C138 | 4030007130 | S.CER C1608 CH 1H 101J-T | B | 107.4/62.5 |
| C139 | 4030007160 | S.CER C1608 CH 1H 181J-T | B | 83.6/62.7 |
| C140 | 4030007160 | S.CER C1608 CH 1H 181J-T | B | 83.6/64.5 |
| C141 | 4030008330 | S.CER C1608 UJ 1H 560J-T | B | 177.2/63.2 |
| C142 | 4030008330 | S.CER C1608 UJ 1H 560J-T | B | 169.3/63.2 |
| C143 | 4030007090 | S.CER C1608 CH 1H 470J-T | B | 155.2/63.2 |
| C201 | 4030011600 | S.CER C1608 JB 1E 104K-T | B | 49.1/57.2 |
| C202 | 4030006900 | S.CER C1608 JB 1H 103K-T | T | 57.7/55.4 |
| C203 | 4030011600 | S.CER C1608 JB 1E 104K-T | B | 50.4/46.3 |
| C204 | 4030011600 | S.CER C1608 JB 1E 104K-T | B | 53.2/45.4 |
| C205 | 4030011600 | S.CER C1608 JB 1E 104K-T | B | 43.4/59.6 |
| C206 | 4030011600 | S.CER C1608 JB 1E 104K-T | B | 44.4/54.6 |
| C207 | 4030006880 | S.CER C1608 JB 1H 472K-T | B | 41.1/59.6 |
| C208 | 4030007010 | S.CER C1608 CH 1H 100D-T | T | 45.0/56.1 |
| C209 | 4030006880 | S.CER C1608 JB 1H 472K-T | B | 38.1/59.6 |
| C210 | 4030006900 | S.CER C1608 JB 1H 103K-T | B | 45.2/52.1 |
| C211 | 4030009000 | S.CER C2012 JB 1C 224K-T | B | 45.6/47.9 |
| C212 | 4030006880 | S.CER C1608 JB 1H 472K-T | B | 52.4/62.0 |
| C213 | 4030006880 | S.CER C1608 JB 1H 472K-T | T | 54.5/45.1 |
| C214 | 4030006880 | S.CER C1608 JB 1H 472K-T | B | 48.5/46.3 |
| C215 | 4030006880 | S.CER C1608 JB 1H 472K-T | T | 43.8/68.4 |
| C501 | 4030011600 | S.CER C1608 JB 1E 104K-T | B | 27.1/25.3 |
| C504 | 4030011600 | S.CER C1608 JB 1E 104K-T | T | 30.8/33.4 |
| C505 | 4030011600 | S.CER C1608 JB 1E 104K-T | T | 19.5/33.7 |
| C521 | 4030006880 | S.CER C1608 JB 1H 472K-T | B | 28.0/35.0 |
| C535 | 4030006880 | S.CER C1608 JB 1H 472K-T | T | 33.5/21.9 |
| C551 | 4030006880 | S.CER C1608 JB 1H 472K-T | B | 63.6/10.9 |
| C552 | 4030006880 | S.CER C1608 JB 1H 472K-T | T | 61.5/22.9 |
| C553 | 4030006880 | S.CER C1608 JB 1H 472K-T | B | 58.0/10.2 |
| C554 | 4030006880 | S.CER C1608 JB 1H 472K-T | T | 90.3/12.9 |
| C555 | 4030006880 | S.CER C1608 JB 1H 472K-T | B | 68.8/12.6 |
| C556 | 4030006880 | S.CER C1608 JB 1H 472K-T | B | 69.8/27.9 |
| C557 | 4030006880 | S.CER C1608 JB 1H 472K-T | B | 67.4/32.9 |
| C558 | 4030006880 | S.CER C1608 JB 1H 472K-T | T | 114.3/25.9 |
| C559 | 4030006880 | S.CER C1608 JB 1H 472K-T | T | 90.4/27.1 |
| C560 | 4030006880 | S.CER C1608 JB 1H 472K-T | T | 90.4/30.5 |
| C561 | 4030006880 | S.CER C1608 JB 1H 472K-T | T | 114.3/29.9 |
| C562 | 4030006880 | S.CER C1608 JB 1H 472K-T | T | 138.2/27.1 |
| C563 | 4030006880 | S.CER C1608 JB 1H 472K-T | T | 138.2/30.5 |
| C564 | 4030006880 | S.CER C1608 JB 1H 472K-T | T | 162.1/27.2 |
| C565 | 4030006880 | S.CER C1608 JB 1H 472K-T | T | 162.1/30.4 |
| C566 | 4030006880 | S.CER C1608 JB 1H 472K-T | B | 180.9/33.5 |
| C567 | 4030006880 | S.CER C1608 JB 1H 472K-T | T | 109.8/17.8 |
| C568 | 4030006880 | S.CER C1608 JB 1H 472K-T | T | 90.4/19.5 |
| C569 | 4030006880 | S.CER C1608 JB 1H 472K-T | B | 181.8/17.1 |
| C570 | 4030006880 | S.CER C1608 JB 1H 472K-T | T | 162.1/22.4 |

## [DIGISEL UNIT]

| REF NO. | PARTS NO. | DESCRIPTION | M. | H/V LOCATION |
|---|---|---|---|---|
| C571 | 4030006880 | S.CER C1608 JB 1H 472K-T | T | 158.5/17.6 |
| C572 | 4030006880 | S.CER C1608 JB 1H 472K-T | T | 138.2/23.1 |
| C573 | 4030006880 | S.CER C1608 JB 1H 472K-T | T | 134.8/17.5 |
| C574 | 4030006880 | S.CER C1608 JB 1H 472K-T | T | 114.3/20.6 |
| C575 | 4030006880 | S.CER C1608 JB 1H 472K-T | T | 90.4/23.3 |
| C601 | 4030011340 | S.CER C1608 CH 1H 471J-T | B | 66.0/22.5 |
| C602 | 4030011280 | S.CER C1608 CH 1H 271J-T | B | 65.2/26.7 |
| C603 | 4030011280 | S.CER C1608 CH 1H 271J-T | T | 59.1/35.6 |
| C604 | 4030007130 | S.CER C1608 CH 1H 101J-T | T | 57.7/33.0 |
| C605 | 4030006940 | S.CER C1608 CH 1H 030C-T | T | 57.2/29.0 |
| C606 | 4030007150 | S.CER C1608 CH 1H 151J-T | T | 55.6/30.7 |
| C607 | 4030007150 | S.CER C1608 CH 1H 151J-T | T | 57.2/25.4 |
| C608 | 4030007150 | S.CER C1608 CH 1H 151J-T | T | 57.2/23.8 |
| C609 | 4030007150 | S.CER C1608 CH 1H 151J-T | T | 56.8/22.5 |
| C610 | 4030009520 | S.CER C1608 CH 1H 020B-T | B | 77.3/11.3 |
| C611 | 4030009550 | S.CER C1608 CH 1H 2R5B-T | B | 76.0/11.3 |
| C613 | 4030007000 | S.CER C1608 CH 1H 090D-T | B | 73.8/12.5 |
| C614 | 4030007040 | S.CER C1608 CH 1H 180J-T | B | 73.7/21.1 |
| C615 | 4030007040 | S.CER C1608 CH 1H 180J-T | B | 73.9/28.2 |
| C616 | 4030007040 | S.CER C1608 CH 1H 180J-T | B | 73.9/29.7 |
| C617 | 4030007070 | S.CER C1608 CH 1H 330J-T | B | 76.0/19.4 |
| C618 | 4030007090 | S.CER C1608 CH 1H 470J-T | T | 75.5/20.7 |
| C619 | 4030007040 | S.CER C1608 CH 1H 180J-T | T | 65.7/35.3 |
| C620 | 4030007040 | S.CER C1608 CH 1H 180J-T | T | 65.8/36.7 |
| C621 | 4030007040 | S.CER C1608 CH 1H 180J-T | T | 73.7/28.3 |
| C622 | 4030007000 | S.CER C1608 CH 1H 090D-T | T | 73.2/20.2 |
| C624 | 4030009520 | S.CER C1608 CH 1H 020B-T | T | 76.9/10.6 |
| C625 | 4030009550 | S.CER C1608 CH 1H 2R5B-T | T | 76.9/12.0 |
| C626 | 4030008360 | S.CER C1608 UJ 1H 101J-T | B | 124.5/17.4 |
| C628 | 4030009500 | S.CER C1608 CH 1H 0R5B-T | B | 107.4/25.3 |
| C629 | 4030009510 | S.CER C1608 CH 1H 010B-T | B | 83.3/25.5 |
| C630 | 4030009520 | S.CER C1608 CH 1H 020B-T | B | 97.8/25.3 |
| C631 | 4030009910 | S.CER C1608 CH 1H 040B-T | B | 121.2/25.3 |
| C632 | 4030006990 | S.CER C1608 CH 1H 080D-T | B | 131.3/25.3 |
| C633 | 4030007040 | S.CER C1608 CH 1H 180J-T | B | 145.2/25.3 |
| C634 | 4030008750 | S.CER C1608 CH 1H 360J-T | B | 155.2/25.3 |
| C635 | 4030007110 | S.CER C1608 CH 1H 680J-T | B | 169.0/25.3 |
| C636 | 4030007140 | S.CER C1608 CH 1H 121J-T | B | 179.1/25.3 |
| C637 | 4030007140 | S.CER C1608 CH 1H 121J-T | B | 107.4/18.3 |
| C638 | 4030007130 | S.CER C1608 CH 1H 101J-T | B | 107.4/16.5 |
| C639 | 4030007160 | S.CER C1608 CH 1H 181J-T | B | 83.9/18.1 |
| C640 | 4030007160 | S.CER C1608 CH 1H 181J-T | B | 84.7/16.3 |
| C641 | 4030008330 | S.CER C1608 UJ 1H 560J-T | B | 177.0/17.9 |
| C642 | 4030008330 | S.CER C1608 UJ 1H 560J-T | B | 169.0/18.0 |
| C643 | 4030007090 | S.CER C1608 CH 1H 470J-T | B | 155.5/18.0 |
| C701 | 4030011600 | S.CER C1608 JB 1E 104K-T | T | 52.3/17.7 |
| C702 | 4030006900 | S.CER C1608 JB 1H 103K-T | T | 54.6/27.3 |
| C703 | 4030011600 | S.CER C1608 JB 1E 104K-T | B | 40.3/10.4 |
| C704 | 4030011600 | S.CER C1608 JB 1E 104K-T | B | 52.1/9.8 |
| C705 | 4030011600 | S.CER C1608 JB 1E 104K-T | B | 44.0/28.1 |
| C706 | 4030011600 | S.CER C1608 JB 1E 104K-T | T | 45.1/22.6 |
| C707 | 4030006880 | S.CER C1608 JB 1H 472K-T | B | 42.7/28.1 |
| C708 | 4030007010 | S.CER C1608 CH 1H 100D-T | T | 46.5/22.7 |
| C709 | 4030006880 | S.CER C1608 JB 1H 472K-T | B | 40.6/28.9 |
| C710 | 4030006900 | S.CER C1608 JB 1H 103K-T | B | 45.6/22.7 |
| C711 | 4030009000 | S.CER C2012 JB 1C 224K-T | B | 45.7/24.4 |
| C712 | 4030006880 | S.CER C1608 JB 1H 472K-T | T | 54.8/32.3 |
| C713 | 4030006880 | S.CER C1608 JB 1H 472K-T | B | 52.1/7.9 |
| C714 | 4030006880 | S.CER C1608 JB 1H 472K-T | B | 42.4/6.5 |
| C715 | 4030006880 | S.CER C1608 JB 1H 472K-T | T | 54.2/34.3 |
| RL2 | 6330001750 | REL FTR-B4CA012Z | | |
| RL21 | 6330001750 | REL FTR-B4CA012Z | | |
| RL51 | 6330001750 | REL FTR-B4CA012Z | | |
| RL52 | 6330001750 | REL FTR-B4CA012Z | | |
| RL53 | 6330001750 | REL FTR-B4CA012Z | | |
| RL54 | 6330001750 | REL FTR-B4CA012Z | | |
| RL55 | 6330001750 | REL FTR-B4CA012Z | | |
| RL56 | 6330001750 | REL FTR-B4CA012Z | | |
| RL57 | 6330001750 | REL FTR-B4CA012Z | | |
| RL58 | 6330001750 | REL FTR-B4CA012Z | | |
| RL59 | 6330001750 | REL FTR-B4CA012Z | | |
| RL60 | 6330001750 | REL FTR-B4CA012Z | | |
| RL61 | 6330001750 | REL FTR-B4CA012Z | | |
| RL62 | 6330001750 | REL FTR-B4CA012Z | | |
| RL63 | 6330001750 | REL FTR-B4CA012Z | | |
| RL64 | 6330001750 | REL FTR-B4CA012Z | | |
| RL65 | 6330001750 | REL FTR-B4CA012Z | | |
| RL66 | 6330001750 | REL FTR-B4CA012Z | | |
| RL67 | 6330001750 | REL FTR-B4CA012Z | | |
| RL69 | 6330001750 | REL FTR-B4CA012Z | | |
| RL70 | 6330001750 | REL FTR-B4CA012Z | | |
| RL71 | 6330001750 | REL FTR-B4CA012Z | | |
| RL72 | 6330001750 | REL FTR-B4CA012Z | | |
| RL73 | 6330001750 | REL FTR-B4CA012Z | | |
| RL74 | 6330001750 | REL FTR-B4CA012Z | | |
| RL75 | 6330001750 | REL FTR-B4CA012Z | | |
| RL76 | 6330001750 | REL FTR-B4CA012Z | | |
| RL201 | 6330001750 | REL FTR-B4CA012Z | | |
| RL502 | 6330001750 | REL FTR-B4CA012Z | | |
| RL521 | 6330001750 | REL FTR-B4CA012Z | | |
| RL551 | 6330001750 | REL FTR-B4CA012Z | | |
| RL552 | 6330001750 | REL FTR-B4CA012Z | | |
| RL553 | 6330001750 | REL FTR-B4CA012Z | | |
| RL554 | 6330001750 | REL FTR-B4CA012Z | | |
| RL555 | 6330001750 | REL FTR-B4CA012Z | | |
| RL556 | 6330001750 | REL FTR-B4CA012Z | | |
| RL557 | 6330001750 | REL FTR-B4CA012Z | | |
| RL558 | 6330001750 | REL FTR-B4CA012Z | | |
| RL559 | 6330001750 | REL FTR-B4CA012Z | | |
| RL560 | 6330001750 | REL FTR-B4CA012Z | | |
| RL561 | 6330001750 | REL FTR-B4CA012Z | | |
| RL562 | 6330001750 | REL FTR-B4CA012Z | | |
| RL563 | 6330001750 | REL FTR-B4CA012Z | | |

Eqv.= This component is equivalent to the REF No. component listed above, and may be substituted on parts orders and repairs.

M.=Mounted side (T: Mounted on the Top side, B: Mounted on the Bottom side)
S.=Surface mount

## [DIGISEL UNIT]

| REF NO. | PARTS NO. | DESCRIPTION | M. | H/V LOCATION |
|---|---|---|---|---|
| RL564 | 6330001750 | REL FTR-B4CA012Z | | |
| RL565 | 6330001750 | REL FTR-B4CA012Z | | |
| RL566 | 6330001750 | REL FTR-B4CA012Z | | |
| RL567 | 6330001750 | REL FTR-B4CA012Z | | |
| RL569 | 6330001750 | REL FTR-B4CA012Z | | |
| RL570 | 6330001750 | REL FTR-B4CA012Z | | |
| RL571 | 6330001750 | REL FTR-B4CA012Z | | |
| RL572 | 6330001750 | REL FTR-B4CA012Z | | |
| RL573 | 6330001750 | REL FTR-B4CA012Z | | |
| RL574 | 6330001750 | REL FTR-B4CA012Z | | |
| RL575 | 6330001750 | REL FTR-B4CA012Z | | |
| RL576 | 6330001750 | REL FTR-B4CA012Z | | |
| RL701 | 6330001750 | REL FTR-B4CA012Z | | |
| J1 | 6510028210 | CON SJ050010 (TMP-J01X-V6) | | |
| J2 | 6510028210 | CON SJ050010 (TMP-J01X-V6) | | |
| J10 | 6510020081 | S.CON 52808-2071(2090) | T | 4.5/40.5 |
| J501 | 6510028210 | CON SJ050010 (TMP-J01X-V6) | | |
| J502 | 6510028210 | CON SJ050010 (TMP-J01X-V6) | | |

## [NETWORK UNIT]

| REF NO. | PARTS NO. | DESCRIPTION | M. | H/V LOCATION |
|---|---|---|---|---|
| Q301 | 1590000680 | S.TRA DTC114EUA T106 | T | 64.0/45.8 |
| L50 | 6110003950 | COI LA-598 | | |
| L60 | 6110003910 | COI LA-593 | | |
| L70 | 6110003050 | COI LA-492 | | |
| L80 | 6110003050 | COI LA-492 | | |
| L90 | 6110003060 | COI LA-493 | | |
| L100 | 6110003070 | COI LA-494 | | |
| L110 | 6110003920 | COI LA-594 | | |
| L120 | 6140004460 | COI LR-504 | | |
| L130 | 6140004470 | COI LR-505 | | |
| L131 | 6140004470 | COI LR-505 | | |
| L300 | 6180000990 | COI LAL 04NA 101K | | |
| R300 | 7030000420 | S.RES MCR10EZHJ 2.2K (222) | T | 202.8/6.9 |
| R301 | 7030000420 | S.RES MCR10EZHJ 2.2K (222) | T | 201.5/11.3 |
| R302 | 7030000420 | S.RES MCR10EZHJ 2.2K (222) | T | 206.2/6.9 |
| R303 | 7030009800 | S.RES ERJ12YJ121U (120) | T | 209.7/5.0 |
| C1 | 4620000150 | VAR KB-150-07 150P | | |
| C2 | 4620000150 | VAR KB-150-07 150P | | |
| C3 | 4010007580 | CER HT20SJ SL 201J 3KV | | |
| C4 | 4010007580 | CER HT20SJ SL 201J 3KV | | |
| C5 | 4010007580 | CER HT20SJ SL 201J 3KV | | |
| C6 | 4010007580 | CER HT20SJ SL 201J 3KV | | |
| C7 | 4010007580 | CER HT20SJ SL 201J 3KV | | |
| C8 | 4010007580 | CER HT20SJ SL 201J 3KV | | |
| C9 | 4010007580 | CER HT20SJ SL 201J 3KV | | |
| C10 | 4010007580 | CER HT20SJ SL 201J 3KV | | |
| C20 | 4010007570 | CER HT15SJ SL 151J 3KV | | |
| C21 | 4010007570 | CER HT15SJ SL 151J 3KV | | |
| C22 | 4010007570 | CER HT15SJ SL 151J 3KV | | |
| C23 | 4010007570 | CER HT15SJ SL 151J 3KV | | |
| C24 | 4010007570 | CER HT15SJ SL 151J 3KV | | |
| C25 | 4010007570 | CER HT15SJ SL 151J 3KV | | |
| C26 | 4010007570 | CER HT15SJ SL 151J 3KV | | |
| C27 | 4010007570 | CER HT15SJ SL 151J 3KV | | |
| C30 | 4010007550 | CER HT11SJ SL 820J 3KV | | |
| C31 | 4010007550 | CER HT11SJ SL 820J 3KV | | |
| C32 | 4010007550 | CER HT11SJ SL 820J 3KV | | |
| C33 | 4010007550 | CER HT11SJ SL 820J 3KV | | |
| C34 | 4010007550 | CER HT11SJ SL 820J 3KV | | |
| C35 | 4010007550 | CER HT11SJ SL 820J 3KV | | |
| C36 | 4010007550 | CER HT11SJ SL 820J 3KV | | |
| C37 | 4010007550 | CER HT11SJ SL 820J 3KV | | |
| C40 | 4010008551 | CER DEA1X3F390JC3B-Z | | |
| C41 | 4010008551 | CER DEA1X3F390JC3B-Z | | |
| C42 | 4010008551 | CER DEA1X3F390JC3B-Z | | |
| C43 | 4010008551 | CER DEA1X3F390JC3B-Z | | |
| C44 | 4010008551 | CER DEA1X3F390JC3B-Z | | |
| C45 | 4010008551 | CER DEA1X3F390JC3B-Z | | |
| C46 | 4010008551 | CER DEA1X3F390JC3B-Z | | |
| C47 | 4010008551 | CER DEA1X3F390JC3B-Z | | |
| C50 | 4030006880 | S.CER C1608 JB 1H 472K-T | T | 140.7/12.0 |
| C60 | 4030006880 | S.CER C1608 JB 1H 472K-T | T | 154.1/12.0 |
| C70 | 4030006880 | S.CER C1608 JB 1H 472K-T | T | 167.5/16.1 |
| C80 | 4030006880 | S.CER C1608 JB 1H 472K-T | T | 181.9/21.5 |
| C90 | 4030006880 | S.CER C1608 JB 1H 472K-T | T | 195.3/21.3 |
| C100 | 4030006880 | S.CER C1608 JB 1H 472K-T | T | 204.4/20.7 |
| C110 | 4030006880 | S.CER C1608 JB 1H 472K-T | T | 205.8/20.7 |
| C120 | 4030006880 | S.CER C1608 JB 1H 472K-T | B | 66.1/49.8 |
| C202 | 4030006880 | S.CER C1608 JB 1H 472K-T | T | 187.4/13.2 |
| C203 | 4030006880 | S.CER C1608 JB 1H 472K-T | T | 188.4/15.7 |
| C204 | 4030006880 | S.CER C1608 JB 1H 472K-T | T | 189.4/13.2 |
| C205 | 4030006880 | S.CER C1608 JB 1H 472K-T | T | 190.4/15.7 |
| C206 | 4030006880 | S.CER C1608 JB 1H 472K-T | T | 191.4/13.2 |
| C207 | 4030006880 | S.CER C1608 JB 1H 472K-T | T | 192.4/15.7 |
| C208 | 4030006880 | S.CER C1608 JB 1H 472K-T | T | 193.4/13.2 |
| C209 | 4030006880 | S.CER C1608 JB 1H 472K-T | T | 194.4/15.7 |
| C252 | 4030006880 | S.CER C1608 JB 1H 472K-T | T | 175.4/13.2 |
| C253 | 4030006880 | S.CER C1608 JB 1H 472K-T | T | 176.4/15.7 |
| C254 | 4030006880 | S.CER C1608 JB 1H 472K-T | T | 177.4/13.2 |
| C255 | 4030006880 | S.CER C1608 JB 1H 472K-T | T | 178.4/15.7 |
| C256 | 4030006880 | S.CER C1608 JB 1H 472K-T | T | 179.4/13.2 |
| C257 | 4030006880 | S.CER C1608 JB 1H 472K-T | T | 180.4/15.7 |
| C258 | 4030006880 | S.CER C1608 JB 1H 472K-T | T | 181.4/13.2 |
| C259 | 4030006880 | S.CER C1608 JB 1H 472K-T | T | 182.4/15.7 |
| C300 | 4030006880 | S.CER C1608 JB 1H 472K-T | T | 184.4/13.2 |
| C301 | 4030006880 | S.CER C1608 JB 1H 472K-T | T | 210.5/10.1 |
| RL10 | 6330001200 | REL VS-12MBU-UC | | |
| RL11 | 6330001200 | REL VS-12MBU-UC | | |
| RL20 | 6330001200 | REL VS-12MBU-UC | | |
| RL21 | 6330001200 | REL VS-12MBU-UC | | |
| RL30 | 6330001200 | REL VS-12MBU-UC | | |
| RL31 | 6330001200 | REL VS-12MBU-UC | | |
| RL40 | 6330001200 | REL VS-12MBU-UC | | |
| RL41 | 6330001200 | REL VS-12MBU-UC | | |
| RL50 | 6330001460 | REL FTR-F1CA012V | | |
| RL60 | 6330001200 | REL VS-12MBU-UC | | |
| RL70 | 6330001200 | REL VS-12MBU-UC | | |
| RL80 | 6330001200 | REL VS-12MBU-UC | | |
| RL90 | 6330001200 | REL VS-12MBU-UC | | |
| RL100 | 6330001200 | REL VS-12MBU-UC | | |
| RL110 | 6330001200 | REL VS-12MBU-UC | | |
| RL120 | 6330001200 | REL VS-12MBU-UC | | |
| J1 | 6510021561 | S.CON 52808-2470 (2490) | T | 184.9/7.4 |
| J2 | 6510017930 | CON 1771P145-20 | | |
| J3 | 6510017930 | CON 1771P145-20 | | |
| J4 | 6510003521 | CON S04B-EH-S(LF)(SN) | | |

Eqv.= This component is equivalent to the REF No. component listed above, and may be substituted on parts orders and repairs.

M.=Mounted side (T: Mounted on the Top side, B: Mounted on the Bottom side)
S.=Surface mount

## [FILTER UNIT]

| REF NO. | PARTS NO. | DESCRIPTION | M. | H/V LOCATION |
|---|---|---|---|---|
| D452 | 1750000271 | S.DIO 1SS301(TE85LF) | T | 32.0/20.5 |
| D502 | 1750000271 | S.DIO 1SS301(TE85LF) | T | 54.8/30.3 |
| D552 | 1750000271 | S.DIO 1SS301(TE85LF) | T | 155.6/29.1 |
| D602 | 1750000271 | S.DIO 1SS301(TE85LF) | T | 130.1/20.3 |
| D652 | 1750000271 | S.DIO 1SS301(TE85LF) | T | 93.8/33.0 |
| D702 | 1750000271 | S.DIO 1SS301(TE85LF) | T | 69.6/20.3 |
| D752 | 1750000271 | S.DIO 1SS301(TE85LF) | T | 113.1/33.0 |
| D802 | 1750000271 | S.DIO 1SS301(TE85LF) | T | 173.6/25.9 |
| L401 | 6200005131 | S.COI NLC453232T-101K-PF | T | 25.4/136.7 |
| L402 | 6140004310 | COI LR-471 | | |
| L403 | 6140004300 | COI LR-470 | | |
| L404 | 6140004300 | COI LR-470 | | |
| L405 | 6200005131 | S.COI NLC453232T-101K-PF | T | 7.3/24.7 |
| L451 | 6200005131 | S.COI NLC453232T-101K-PF | T | 4.4/143.9 |
| L452 | 6140004270 | COI LR-467 | | |
| L453 | 6140004290 | COI LR-469 | | |
| L454 | 6140004290 | COI LR-469 | | |
| L455 | 6200005131 | S.COI NLC453232T-101K-PF | T | 28.4/29.9 |
| L501 | 6200005131 | S.COI NLC453232T-101K-PF | T | 46.3/133.8 |
| L502 | 6140004280 | COI LR-468 | | |
| L503 | 6140004270 | COI LR-467 | | |
| L504 | 6140004270 | COI LR-467 | | |
| L505 | 6200005131 | S.COI NLC453232T-101K-PF | T | 50.2/29.6 |
| L551 | 6200005131 | S.COI NLC453232T-101K-PF | T | 150.7/133.8 |
| L552 | 6140004260 | COI LR-466 | | |
| L553 | 6140004280 | COI LR-468 | | |
| L554 | 6140004280 | COI LR-468 | | |
| L555 | 6200005131 | S.COI NLC453232T-101K-PF | T | 151.0/29.7 |
| L601 | 6200005131 | S.COI NLC453232T-101K-PF | T | 129.9/133.8 |
| L602 | 6140004250 | COI LR-465 | | |
| L603 | 6140004240 | COI LR-464 | | |
| L604 | 6140004240 | COI LR-464 | | |
| L605 | 6200005131 | S.COI NLC453232T-101K-PF | T | 130.1/14.2 |
| L651 | 6200005131 | S.COI NLC453232T-101K-PF | T | 73.2/35.5 |
| L652 | 6140004200 | COI LR-463 | | |
| L653 | 6140004170 | COI LR-462 | | |
| L654 | 6140004170 | COI LR-462 | | |
| L655 | 6200005131 | S.COI NLC453232T-101K-PF | T | 92.3/29.8 |
| L701 | 6200005131 | S.COI NLC453232T-101K-PF | T | 67.2/133.8 |
| L702 | 6140004130 | COI LR-461 | | |
| L703 | 6140004070 | COI LR-460 | | |
| L704 | 6140004070 | COI LR-460 | | |
| L705 | 6200005131 | S.COI NLC453232T-101K-PF | T | 69.6/14.1 |
| L751 | 6200005131 | S.COI NLC453232T-101K-PF | T | 109.1/133.8 |
| L752 | 6110003900 | COI LA-592 | | |
| L753 | 6110003890 | COI LA-591 | | |
| L754 | 6110003890 | COI LA-591 | | |
| L755 | 6200005131 | S.COI NLC453232T-101K-PF | T | 111.4/29.8 |
| L801 | 6200001831 | S.COI NLV32T-100J | T | 37.2/23.4 |
| L802 | 6110003880 | COI LA-590 | | |
| L803 | 6110003870 | COI LA-589 | | |
| L804 | 6110003870 | COI LA-589 | | |
| L805 | 6200001831 | S.COI NLV32T-100J | T | 173.9/22.8 |
| C401 | 4030006880 | S.CER C1608 JB 1H 472K-T | T | 25.4/130.4 |
| C402 | 4010008200 | CER HM11TJ SL 331J 500V | | |
| C403 | 4010008200 | CER HM11TJ SL 331J 500V | | |
| C404 | 4010008300 | CER HM11TJ SL 391J 500V | | |
| C405 | 4010008300 | CER HM11TJ SL 391J 500V | | |
| C406 | 4010008210 | CER HM60TJ SL 560J 500V | | |
| C407 | 4010007590 | CER HM15SJ SL 681J 500V | | |
| C408 | 4010007590 | CER HM15SJ SL 681J 500V | | |
| C409 | 4010007590 | CER HM15SJ SL 681J 500V | | |
| C410 | 4010005870 | CER HM95SJ SL 221J 500V | | |
| C411 | 4010008280 | CER HM95TJ SL 221J 500V | | |
| C412 | 4010008370 | CER HM60TJ SL 150J 500V | | |
| C413 | 4010007590 | CER HM15SJ SL 681J 500V | | |
| C414 | 4010007590 | CER HM15SJ SL 681J 500V | | |
| C415 | 4010007590 | CER HM15SJ SL 681J 500V | | |
| C416 | 4010008300 | CER HM11TJ SL 391J 500V | | |
| C417 | 4010008230 | CER HM60TJ SL 820J 500V | | |
| C418 | 4010007590 | CER HM15SJ SL 681J 500V | | |
| C419 | 4010007590 | CER HM15SJ SL 681J 500V | | |
| C420 | 4030006880 | S.CER C1608 JB 1H 472K-T | T | 11.7/26.4 |
| C451 | 4030006880 | S.CER C1608 JB 1H 472K-T | T | 26.6/127.9 |
| C452 | 4010008290 | CER HM95TJ SL 271J 500V | | |
| C453 | 4010008280 | CER HM95TJ SL 221J 500V | | |
| C454 | 4010008240 | CER HM60TJ SL 101J 500V | | |
| C455 | 4010005810 | CER HM74SJ SL 111J 500V | | |
| C456 | 4010007490 | CER HM15SJ SL 561J 500V | | |
| C457 | 4010006410 | CER HM13SJ SL 471J 500V | | |
| C458 | 4010008250 | CER HM74TJ SL 121J 500V | | |
| C459 | 4010005810 | CER HM74SJ SL 111J 500V | | |
| C461 | 4010007490 | CER HM15SJ SL 561J 500V | | |
| C462 | 4010007490 | CER HM15SJ SL 561J 500V | | |
| C463 | 4010008340 | CER HM60TJ SL 270J 500V | | |
| C464 | 4010008320 | CER HM60TJ SL 390J 500V | | |
| C465 | 4010007490 | CER HM15SJ SL 561J 500V | | |
| C466 | 4010008220 | CER HM60TJ SL 680J 500V | | |
| C467 | 4030006880 | S.CER C1608 JB 1H 472K-T | T | 32.4/23.4 |
| C468 | 4010008230 | CER HM60TJ SL 820J 500V | | |
| C501 | 4030006880 | S.CER C1608 JB 1H 472K-T | T | 47.6/127.3 |
| C502 | 4010008280 | CER HM95TJ SL 221J 500V | | |
| C503 | 4010008260 | CER HM74TJ SL 151J 500V | | |
| C504 | 4010008280 | CER HM95TJ SL 221J 500V | | |
| C506 | 4010008200 | CER HM11TJ SL 331J 500V | | |
| C507 | 4010008280 | CER HM95TJ SL 221J 500V | | |
| C508 | 4010008280 | CER HM95TJ SL 221J 500V | | |
| C509 | 4010005810 | CER HM74SJ SL 111J 500V | | |
| C511 | 4010008300 | CER HM11TJ SL 391J 500V | | |
| C512 | 4010008300 | CER HM11TJ SL 391J 500V | | |
| C513 | 4010008260 | CER HM74TJ SL 151J 500V | | |

## [FILTER UNIT]

| REF NO. | PARTS NO. | DESCRIPTION | M. | H/V LOCATION |
|---|---|---|---|---|
| C514 | 4010008320 | CER HM60TJ SL 390J 500V | | |
| C515 | 4010008280 | CER HM95TJ SL 221J 500V | | |
| C516 | 4010008280 | CER HM95TJ SL 221J 500V | | |
| C517 | 4030006880 | S.CER C1608 JB 1H 472K-T | T | 54.7/28.4 |
| C518 | 4010008340 | CER HM60TJ SL 270J 500V | | |
| C551 | 4030006880 | S.CER C1608 JB 1H 472K-T | T | 149.9/122.5 |
| C552 | 4010005860 | CER HM95SJ SL 201J 500V | | |
| C554 | 4010008230 | CER HM60TJ SL 820J 500V | | |
| C555 | 4010008370 | CER HM60TJ SL 150J 500V | | |
| C556 | 4010008290 | CER HM95TJ SL 271J 500V | | |
| C557 | 4010008290 | CER HM95TJ SL 271J 500V | | |
| C558 | 4010008320 | CER HM60TJ SL 390J 500V | | |
| C559 | 4010008330 | CER HM60TJ SL 330J 500V | | |
| C560 | 4010008340 | CER HM60TJ SL 270J 500V | | |
| C561 | 4010008200 | CER HM11TJ SL 331J 500V | | |
| C562 | 4010008290 | CER HM95TJ SL 271J 500V | | |
| C563 | 4010008330 | CER HM60TJ SL 330J 500V | | |
| C564 | 4010005650 | CER HM60SJ SL 200J 500V | | |
| C565 | 4010008280 | CER HM95TJ SL 221J 500V | | |
| C566 | 4010008350 | CER HM60TJ SL 220J 500V | | |
| C567 | 4030006880 | S.CER C1608 JB 1H 472K-T | T | 152.2/32.2 |
| C601 | 4030006880 | S.CER C1608 JB 1H 472K-T | T | 130.2/125.0 |
| C604 | 4010008230 | CER HM60TJ SL 820J 500V | | |
| C605 | 4010008370 | CER HM60TJ SL 150J 500V | | |
| C606 | 4010008280 | CER HM95TJ SL 221J 500V | | |
| C607 | 4010008220 | CER HM60TJ SL 680J 500V | | |
| C608 | 4010008350 | CER HM60TJ SL 220J 500V | | |
| C609 | 4010008340 | CER HM60TJ SL 270J 500V | | |
| C610 | 4010008200 | CER HM11TJ SL 331J 500V | | |
| C611 | 4010008230 | CER HM60TJ SL 820J 500V | | |
| C612 | 4010008360 | CER HM60TJ SL 180J 500V | | |
| C613 | 4010008260 | CER HM74TJ SL 151J 500V | | |
| C614 | 4010008230 | CER HM60TJ SL 820J 500V | | |
| C615 | 4030006880 | S.CER C1608 JB 1H 472K-T | T | 130.2/18.3 |
| C651 | 4030006880 | S.CER C1608 JB 1H 472K-T | T | 88.3/124.9 |
| C654 | 4010008360 | CER HM60TJ SL 180J 500V | | |
| C655 | 4010008320 | CER HM60TJ SL 390J 500V | | |
| C656 | 4010008280 | CER HM95TJ SL 221J 500V | | |
| C657 | 4010008220 | CER HM60TJ SL 680J 500V | | |
| C658 | 4010008360 | CER HM60TJ SL 180J 500V | | |
| C659 | 4010008380 | CER HM60TJ SL 120J 500V | | |
| C660 | 4010008280 | CER HM95TJ SL 221J 500V | | |
| C661 | 4010008240 | CER HM60TJ SL 101J 500V | | |
| C662 | 4010008390 | CER HM60TJ SL 100D 500V | | |
| C663 | 4010008250 | CER HM74TJ SL 121J 500V | | |
| C664 | 4010008320 | CER HM60TJ SL 390J 500V | | |
| C665 | 4030006880 | S.CER C1608 JB 1H 472K-T | T | 96.6/28.6 |
| C701 | 4030006880 | S.CER C1608 JB 1H 472K-T | T | 68.6/127.5 |
| C703 | 4010008370 | CER HM60TJ SL 150J 500V | | |
| C704 | 4010008350 | CER HM60TJ SL 220J 500V | | |
| C705 | 4010005650 | CER HM60SJ SL 200J 500V | | |
| C706 | 4010005860 | CER HM95SJ SL 201J 500V | | |
| C707 | 4010008310 | CER HM60TJ SL 470J 500V | | |
| C708 | 4010008370 | CER HM60TJ SL 150J 500V | | |
| C709 | 4010008280 | CER HM95TJ SL 221J 500V | | |
| C710 | 4010008350 | CER HM60TJ SL 220J 500V | | |
| C712 | 4010008330 | CER HM60TJ SL 330J 500V | | |
| C713 | 4010008310 | CER HM60TJ SL 470J 500V | | |
| C714 | 4030006880 | S.CER C1608 JB 1H 472K-T | T | 69.6/18.3 |
| C715 | 4010008360 | CER HM60TJ SL 180J 500V | | |
| C751 | 4030006880 | S.CER C1608 JB 1H 472K-T | T | 109.1/125.0 |
| C755 | 4010008240 | CER HM60TJ SL 101J 500V | | |
| C756 | 4010008230 | CER HM60TJ SL 820J 500V | | |
| C757 | 4010008360 | CER HM60TJ SL 180J 500V | | |
| C758 | 4010008210 | CER HM60TJ SL 560J 500V | | |
| C759 | 4010008240 | CER HM60TJ SL 101J 500V | | |
| C760 | 4010008400 | CER HM60TJ SL 060D 500V | | |
| C761 | 4010008310 | CER HM60TJ SL 470J 500V | | |
| C763 | 4030006880 | S.CER C1608 JB 1H 472K-T | T | 115.6/28.6 |
| C764 | 4010005650 | CER HM60SJ SL 200J 500V | | |
| C765 | 4010008370 | CER HM60TJ SL 150J 500V | | |
| C801 | 4030006880 | S.CER C1608 JB 1H 472K-T | T | 168.6/158.6 |
| C804 | 4010005600 | CER HM60SJ SL 090D 500V | | |
| C805 | 4010008320 | CER HM60TJ SL 390J 500V | | |
| C806 | 4010008310 | CER HM60TJ SL 470J 500V | | |
| C807 | 4010005600 | CER HM60SJ SL 090D 500V | | |
| C808 | 4010008330 | CER HM60TJ SL 330J 500V | | |
| C809 | 4010008320 | CER HM60TJ SL 390J 500V | | |
| C810 | 4010008410 | CER HM60TJ SL 030C 500V | | |
| C811 | 4010005560 | CER HM60SJ SL 050C 500V | | |
| C813 | 4030006880 | S.CER C1608 JB 1H 472K-T | T | 175.6/26.0 |
| C814 | 4010005600 | CER HM60SJ SL 090D 500V | | |
| RL401 | 6330001471 | REL AJS1311F-K2 | | |
| RL402 | 6330001471 | REL AJS1311F-K2 | | |
| RL451 | 6330001471 | REL AJS1311F-K2 | | |
| RL452 | 6330001471 | REL AJS1311F-K2 | | |
| RL501 | 6330001471 | REL AJS1311F-K2 | | |
| RL502 | 6330001471 | REL AJS1311F-K2 | | |
| RL551 | 6330001471 | REL AJS1311F-K2 | | |
| RL552 | 6330001471 | REL AJS1311F-K2 | | |
| RL601 | 6330001471 | REL AJS1311F-K2 | | |
| RL602 | 6330001471 | REL AJS1311F-K2 | | |
| RL651 | 6330001471 | REL AJS1311F-K2 | | |
| RL652 | 6330001471 | REL AJS1311F-K2 | | |
| RL701 | 6330001471 | REL AJS1311F-K2 | | |
| RL702 | 6330001471 | REL AJS1311F-K2 | | |
| RL751 | 6330001471 | REL AJS1311F-K2 | | |
| RL752 | 6330001471 | REL AJS1311F-K2 | | |
| RL801 | 6330001460 | REL FTR-F1CA012V | | |
| RL802 | 6330001460 | REL FTR-F1CA012V | | |
| J901 | 6510017930 | CON 1771P145-20 | | |

Eqv.= This component is equivalent to the REF No. component listed above, and may be substituted on parts orders and repairs.

M.=Mounted side (T: Mounted on the Top side, B: Mounted on the Bottom side)
S.=Surface mount

## [FILTER UNIT]

| REF NO. | PARTS NO. | DESCRIPTION | M. | H/V LOCATION |
|---|---|---|---|---|
| J902 | 6510022031 | S.CON B10B-ZR-SM4-TF(LF)(SN) | T | 145.3/165.2 |
| J903 | 6510019971 | S.CON 52808-1071 | T | 4.0/156.0 |
| J904 | 6510017930 | CON 1771P145-20 | | |
| J905 | 6510019421 | S.CON B8B-ZR-SM4-TF(LF)(SN) | T | 146.8/160.2 |

## [MEMORY UNIT]

| REF NO. | PARTS NO. | DESCRIPTION | M. | H/V LOCATION |
|---|---|---|---|---|
| IC1 | 1130013519 | S.IC JS28F128J3D-75(SX-2590A-13) | T | 39.8/26.3 |
| IC2 | 1130013480 | S.IC JS28F128J3D-75 | T | 24.0/26.3 |
| C1 | 4030011600 | S.CER C1608 JB 1E 104K-T | T | 41.8/38.8 |
| C2 | 4030011600 | S.CER C1608 JB 1E 104K-T | T | 39.9/13.2 |
| C3 | 4030011600 | S.CER C1608 JB 1E 104K-T | T | 36.9/13.2 |
| C4 | 4030011600 | S.CER C1608 JB 1E 104K-T | T | 26.0/38.8 |
| C5 | 4030011600 | S.CER C1608 JB 1E 104K-T | T | 24.0/13.2 |
| C6 | 4030011600 | S.CER C1608 JB 1E 104K-T | T | 21.0/13.2 |
| J1 | 6510024211 | S.CON AXK6S30437YG | T | 55.0/20.0 |
| J2 | 6510024201 | S.CON AXK6S40437YG | T | 10.0/20.0 |

Eqv.= This component is equivalent to the REF No. component listed above, and may be substituted on parts orders and repairs.

M.=Mounted side (T: Mounted on the Top side, B: Mounted on the Bottom side)
S.=Surface mount

# BOARD LAYOUTS

**The combination of top side and bottom side of this page shows the actual configuration of P.C. board.**

## • DISPLAY BOARD (TOP VIEW)

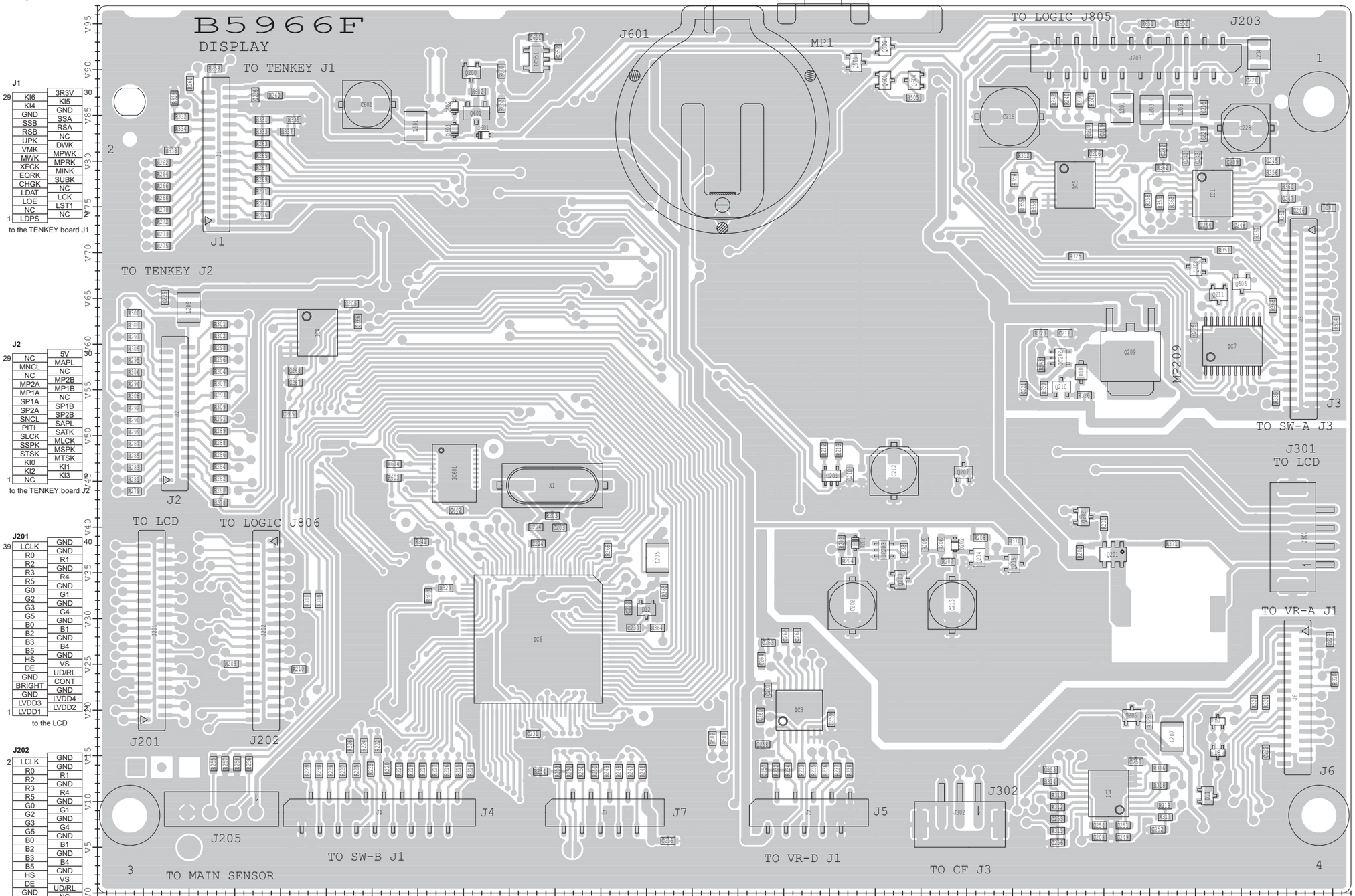


**J1**

| | | | |
|---|---|---|---|
| 29 | KI6 | 3R3V | 30 |
| | KI4 | KI5 | |
| | GND | GND | |
| | SSB | SSA | |
| | RSB | RSA | |
| | NC | NC | |
| | UPK | DWK | |
| | VMK | MPWK | |
| | MWK | MPRK | |
| | XFCK | MINK | |
| | EQRK | SUBK | |
| | CHGK | NC | |
| | LDAT | LCK | |
| | LOE | LST1 | |
| | NC | NC | |
| 1 | LDPS | NC | 2 |

to the TENKEY board J1

**J2**

| | | | |
|---|---|---|---|
| 29 | NC | 5V | 30 |
| | MNCL | MAPL | |
| | NC | NC | |
| | MP2A | MP2B | |
| | MP1A | MP1B | |
| | SP1A | SP1B | |
| | SP2A | SP2B | |
| | SNCL | SAPL | |
| | PITL | SATK | |
| | SLCK | MLCK | |
| | SSPK | MSPK | |
| | STSK | MTSK | |
| | KI0 | KI1 | |
| | KI2 | KI3 | |
| 1 | NC | | 2 |

to the TENKEY board J2

**J201**

| | | | |
|---|---|---|---|
| 39 | LCLK | GND | 40 |
| | R0 | R1 | |
| | R2 | GND | |
| | R3 | R4 | |
| | R5 | GND | |
| | G0 | G1 | |
| | G2 | GND | |
| | G3 | G4 | |
| | G5 | GND | |
| | B0 | B1 | |
| | B2 | GND | |
| | B3 | B4 | |
| | B5 | GND | |
| | HS | VS | |
| | DE | UD/RL | |
| | GND | CONT | |
| | BRIGHT | GND | |
| | GND | LVDD4 | |
| | LVDD3 | LVDD2 | |
| 1 | LVDD1 | | 2 |

to the LCD

**J202**

| | | | |
|---|---|---|---|
| 2 | LCLK | GND | 1 |
| | R0 | R1 | |
| | R2 | GND | |
| | R3 | R4 | |
| | R5 | GND | |
| | G0 | G1 | |
| | G2 | GND | |
| | G3 | G4 | |
| | G5 | GND | |
| | B0 | B1 | |
| | B2 | GND | |
| | B3 | B4 | |
| | B5 | GND | |
| | HS | VS | |
| | DE | UD/RL | |
| | GND | NC | |
| | NC | GND | |
| | GND | LVDD4 | |
| | LVDD3 | LVDD2 | |
| 40 | LVDD1 | | 39 |

to the LOGIC unit J806

**J205**

| | | | | |
|---|---|---|---|---|
| | GND | GND | | 4 |
| | MSA | MSB | | |
| | MSB | MSA | | |
| | 5V | GND | | 1 |

to the MAIN SENSOR

**J4**

| | | | | | | | | | |
|---|---|---|---|---|---|---|---|---|---|
| | GND | MATK | | | | | | | 18 |
| | PLYK | RECK | | | | | | | |
| | EXTK | MSCK | | | | | | | |
| | DMTK | AMK | | | | | | | |
| | RTYK | CWK | | | | | | | |
| | SSBK | F7K | | | | | | | |
| | RSBK | F6K | | | | | | | |
| | F4K | F5K | | | | | | | |
| | F2K | F3K | | | | | | | |
| 1 | | F1K | | | | | | | 17 |

to the SW-B board J1

**J7**

| | | | | | | | | | |
|---|---|---|---|---|---|---|---|---|---|
| 2 | CNVSS | | | | | | | | 10 |
| | GND | | | | | | | | |
| | TDTS | | | | | | | | |
| | SLOS | | | | | | | | |
| | 3R3V | | | | | | | | |
| | DTXD | | | | | | | | |
| | RESET | | | | | | | | |
| | P2ST | | | | | | | | |
| | DRXD | | | | | | | | |
| 1 | DBP1 | | | | | | | | 9 |

**J5**

| | | | | | | | | | |
|---|---|---|---|---|---|---|---|---|---|
| | BRL | | | | | | | | 10 |
| | AVXL | | | | | | | | |
| | DRVL | | | | | | | | |
| | MONL | | | | | | | | |
| | GND | | | | | | | | |
| | 3R3V | | | | | | | | |
| | CNTL | | | | | | | | |
| | VOXL | | | | | | | | |
| | CMPL | | | | | | | | |
| 1 | GND | | | | | | | | 9 |

to the VR-D board J1

**J302**

| | | | |
|---|---|---|---|
| | GND | | 3 |
| | CFBD | | |
| | LOPS | | 1 |

to the CF board J3

**J203**

| | | | | | | | | | | |
|---|---|---|---|---|---|---|---|---|---|---|
| | GND | | | | | | | | | 1 |
| | LTXD | | | | | | | | | |
| | LG PAS | | | | | | | | | |
| | LG RES | | | | | | | | | |
| | GND | | | | | | | | | |
| | C15V | | | | | | | | | |
| | C15V | | | | | | | | | |
| | 8V | | | | | | | | | |
| | GND | | | | | | | | | |
| | VDD5VF | | | | | | | | | |
| | GND | | | | | | | | | 19 |
| | LRXD | | | | | | | | | |
| | NC | | | | | | | | | |
| | NC | | | | | | | | | |
| | +3R3V | | | | | | | | | |
| | GND | | | | | | | | | |
| | C15V | | | | | | | | | |
| | NC | | | | | | | | | |
| | MSND | | | | | | | | | |
| | NC | | | | | | | | | 20 |

to the LOGIC unit J805

**J3**

| | | | |
|---|---|---|---|
| 2 | GND | GND | 1 |
| | MSQL | 3R3V | |
| | PWRL | MAGL | |
| | SSQL | MIGL | |
| | DELL | SAGL | |
| | KI11 | KYSL | |
| | KI9 | KI10 | |
| | KI7 | KI8 | |
| | NC | NC | |
| | NC | NC | |
| | MOND | NC | |
| | TRAK | PWRK | |
| | SNRD | SNBD | |
| | MNBD | SAGD | |
| | MAGD | MNRD | |
| | TN2D | TMD | |
| | VOXD | TN1D | |
| | STBD | PWRD | |
| | NC | LDPS | |
| 40 | GND | GND | 29 |

to the SW-A board J3

**J301**

| | | |
|---|---|---|
| 2 | GND | |
| 1 | CFLH | |

to the LCD

**J6**

| | | | |
|---|---|---|---|
| 2 | MSND | M8V | 1 |
| | NC | NC | |
| | NC | NC | |
| | NC | NC | |
| | PHNI | NC | |
| | DSHK | DOTK | |
| | NC | MUDL | |
| | NC | NC | |
| | SAFL | SRFL | |
| | MAFL | MRFL | |
| | SNRL | SNBL | |
| | MNRL | MNBL | |
| | 3R3V | NC | |
| | GND | NC | |
| 30 | NC | NC | 29 |

to the VR-A board J1

- **DISPLAY BOARD (BOTTOM VIEW )**

**The combination of top side and bottom side of this page shows the actual configuration of P.C. board.**

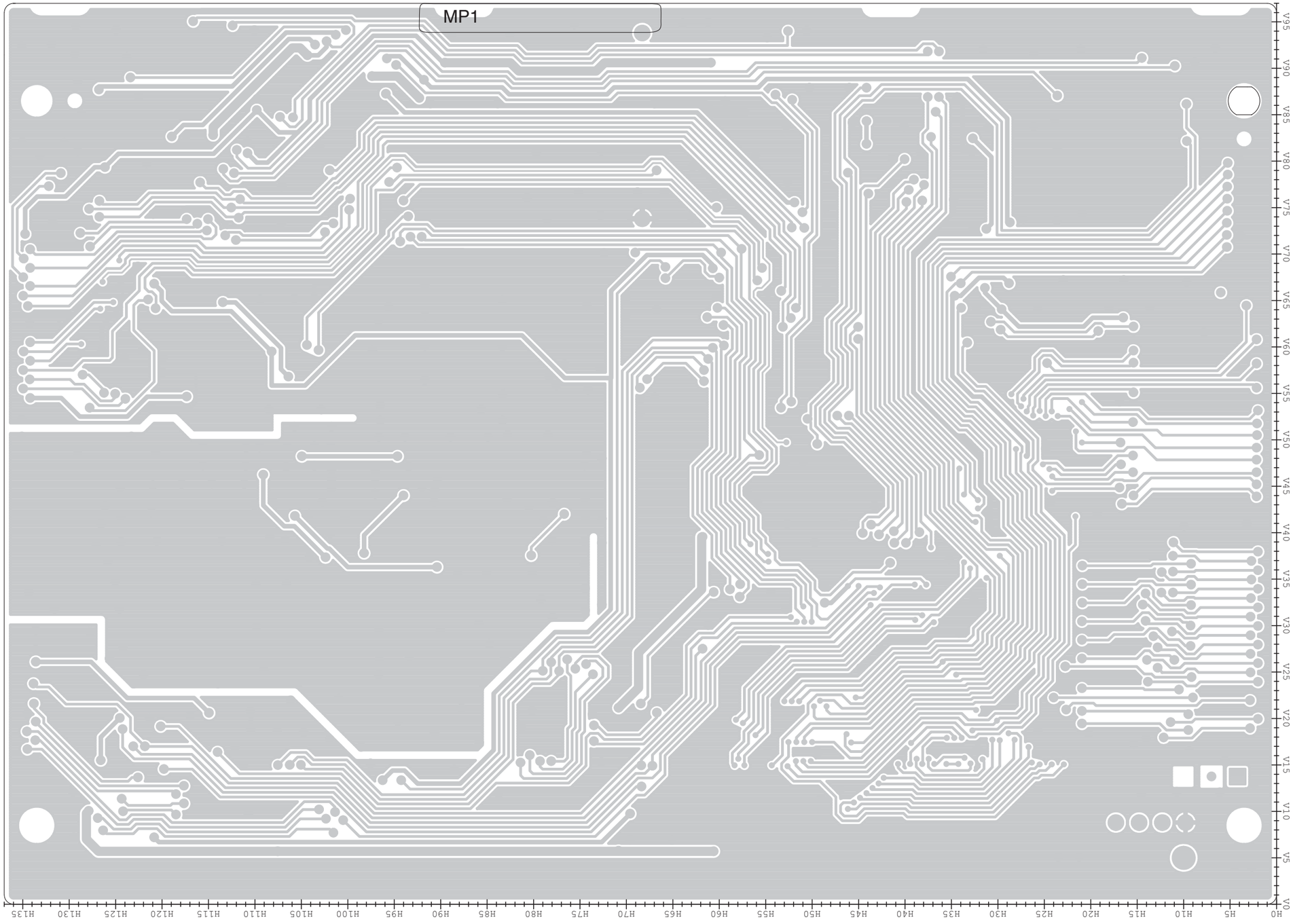

# VOLTAGE DIAGRAMS

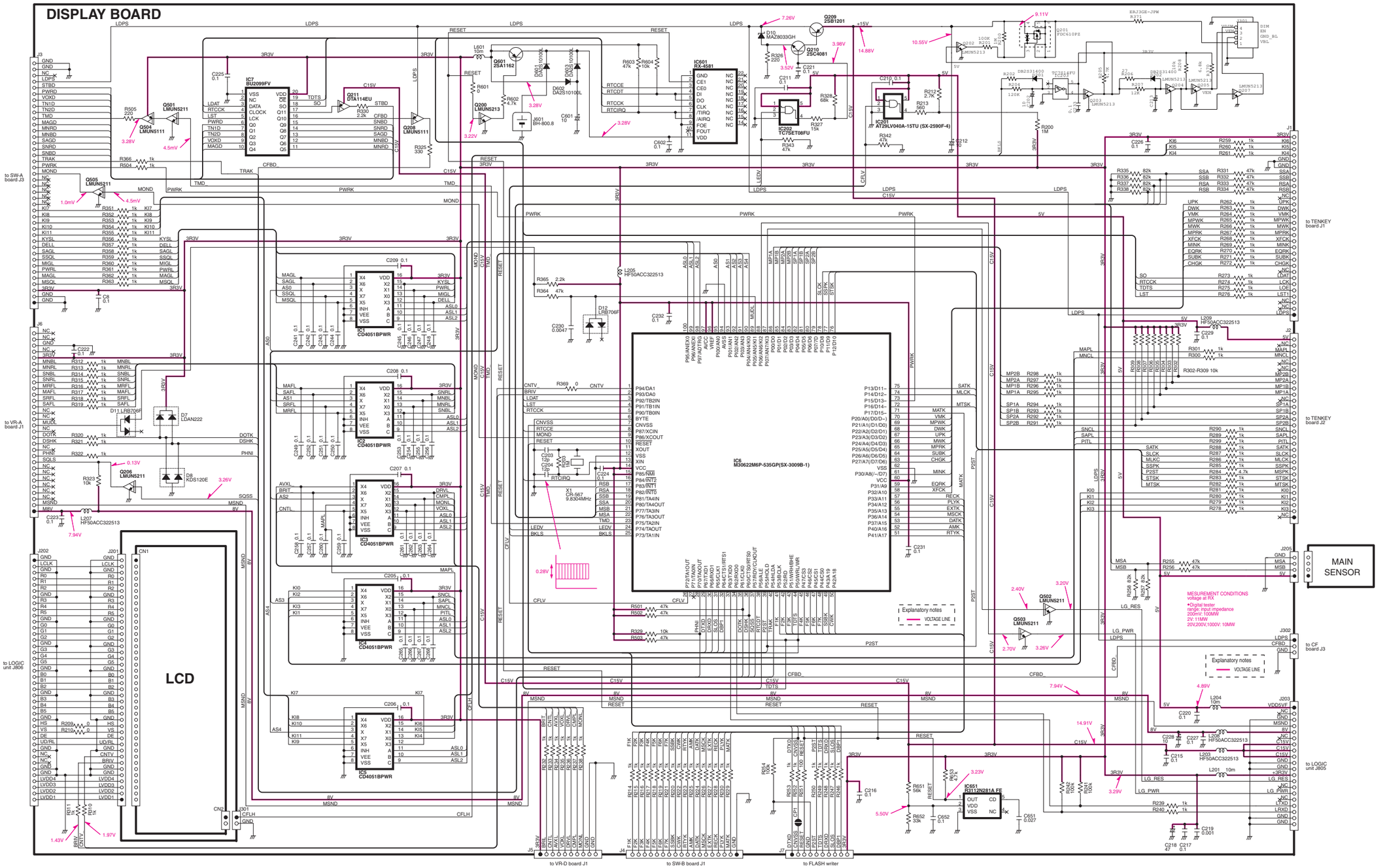

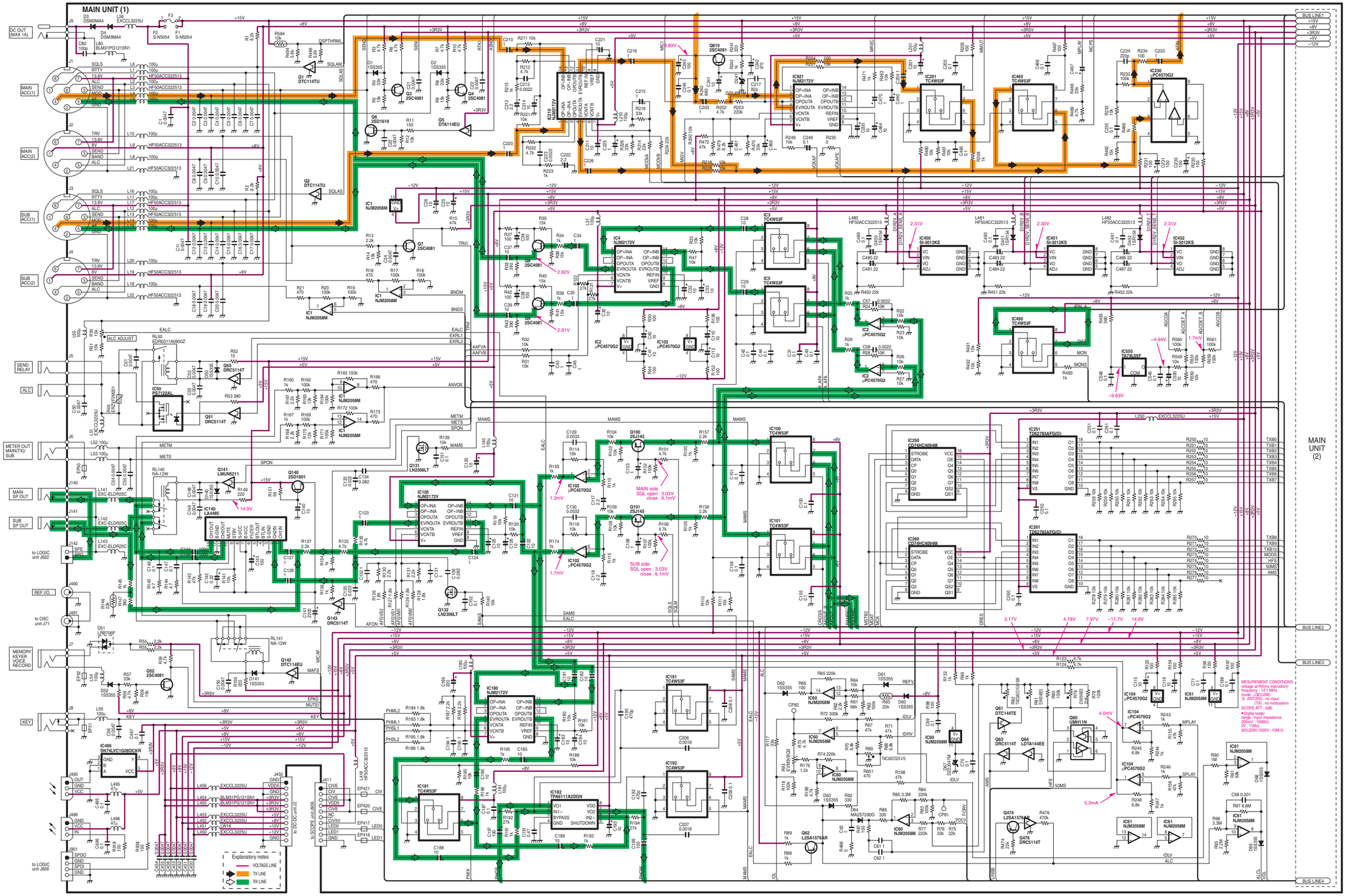
MAIN UNIT (1)
DC OUT (MAX 1A)
MAIN ACC(1)
MAIN ACC(2)
SUB ACC(1)
SUB ACC(2)
SEND RELAY
ALC
METER OUT MAIN(TX) SUB
MAIN SP OUT
SUB SP OUT
to LOGIC unit J822
REF I/O
to OSC unit J71
MEMORY KEYER VOICE RECORD
KEY
to LOGIC unit J826
IC1 NJM2058M
IC2 µPC4570G2
IC3 TC4W53F
IC4 NJM2172V
IC5 TC4W53F
IC100 TC4W53F
IC101 TC4W53F
IC102 µPC4570G2
IC105 NJM2172V
IC180 NJM2172V
IC181 TC4W53F
IC182 TPA6111A2DGN
IC191 TC4W53F
IC192 TC4W53F
IC201 TC4W53F
IC210 NJM2172V
IC230 µPC4570G2
IC250 CD74HC4094M
IC251 TD62783AFG(O)
IC260 CD74HC4094M
IC450 SI-3012KS
IC451 SI-3012KS
IC452 SI-3012KS
IC460 TC4W53F
IC490 TC4W53F
IC495 SN74LVC1G08DCKR
IC550 TA78L05F
IC821 NJM2172V
Q1 DTC114TU
Q2 DTC114TU
Q3 2SC4081
Q4 2SC4081
Q5 DTA114EU
Q6 2SD1619
Q7 2SC4081
Q8 2SC4081
Q51 DRC5114T
Q52 DRC5114T
Q53 DRC5114T
Q61 DTC144TE
Q62 L2SA1576AR
Q64 LDTA144EE
Q100 2SJ145
Q101 2SJ145
Q102 2SJ145
Q131 LN2306LT
Q132 LN2306LT
Q140 2SD1801
Q141 LMUN5211
Q142 DTC114EU
Q143 DRC5114T
Q474 L2SA1576AR
Q476 DRC5114T
Q810 2SC4081
RL50 EDR0011A0900Z
RL140 NA-12W
RL141 NA-12W
IC50 PS2122AL
IC140 LA4485
D1 1SS355
D2 1SS355
D51 LRB706F
D52 1SS355
D141 1SS355
D480 1SR154
D481 1SR154
D482 1SR154
D483 1SR154
D484 1SR154
D485 1SR154
D486 1SR154
D487 1SR154
D488 1SR154
D489 1SR154
D490 1SR154
D491 1SR154
D492 1SR154
D493 1SR154
D494 1SR154
D495 1SR154
D496 1SR154
D497 1SR154
D498 1SR154
D499 1SR154
D500 1SR154
D501 1SR154
D502 1SR154
D503 1SR154
D504 1SR154
D505 1SR154
D506 1SR154
D507 1SR154
D508 1SR154
D509 1SR154
D510 1SR154
D511 1SR154
D512 1SR154
D513 1SR154
D514 1SR154
D515 1SR154
D516 1SR154
D517 1SR154
D518 1SR154
D519 1SR154
D520 1SR154
D521 1SR154
D522 1SR154
D523 1SR154
D524 1SR154
D525 1SR154
D526 1SR154
D527 1SR154
D528 1SR154
D529 1SR154
D530 1SR154
D531 1SR154
D532 1SR154
D533 1SR154
D534 1SR154
D535 1SR154
D536 1SR154
D537 1SR154
D538 1SR154
D539 1SR154
D540 1SR154
D541 1SR154
D542 1SR154
D543 1SR154
D544 1SR154
D545 1SR154
D546 1SR154
D547 1SR154
D548 1SR154
D549 1SR154
D550 1SR154
D551 1SR154
D552 1SR154
D553 1SR154
D554 1SR154
D555 1SR154
D556 1SR154
D557 1SR154
D558 1SR154
D559 1SR154
D560 1SR154
D561 1SR154
D562 1SR154
D563 1SR154
D564 MAZS7280G
D565 1SR154
D566 1SR154
D567 1SR154
D568 1SR154
D569 1SR154
D570 1SR154
D571 1SR154
D572 1SR154
D573 1SR154
D574 1SR154
D575 1SR154
D576 1SR154
D577 1SR154
D578 1SR154
D579 1SR154
D580 1SR154
D581 1SR154
D582 1SR154
D583 1SR154
D584 1SR154

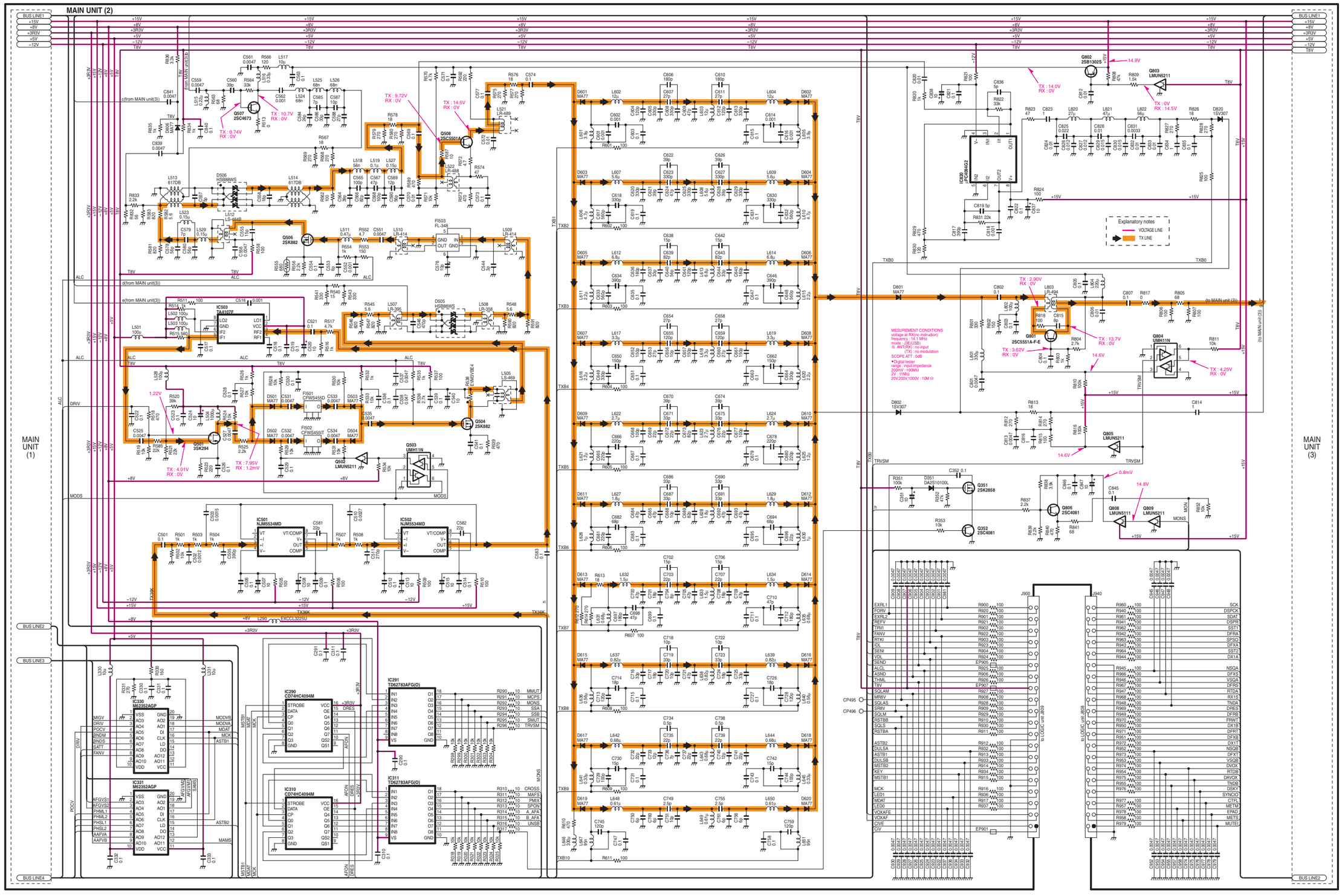
MAIN UNIT (2)
MAIN UNIT (1)
MAIN UNIT (3)
Explanatory notes
VOLTAGE LINE
TX LINE
MESUREMENT CONDITIONS
voltage at RX(no instruction)
frequency : 14.1 MHz
mode : JSE(USB)
ANT(RX) : no input
(TX) : no modulation
SCOPE ATT : 0dB
Digital tester
range : input impedance
200mV : 100MΩ
2V : 11MΩ
20V,200V,1000V : 10M Ω

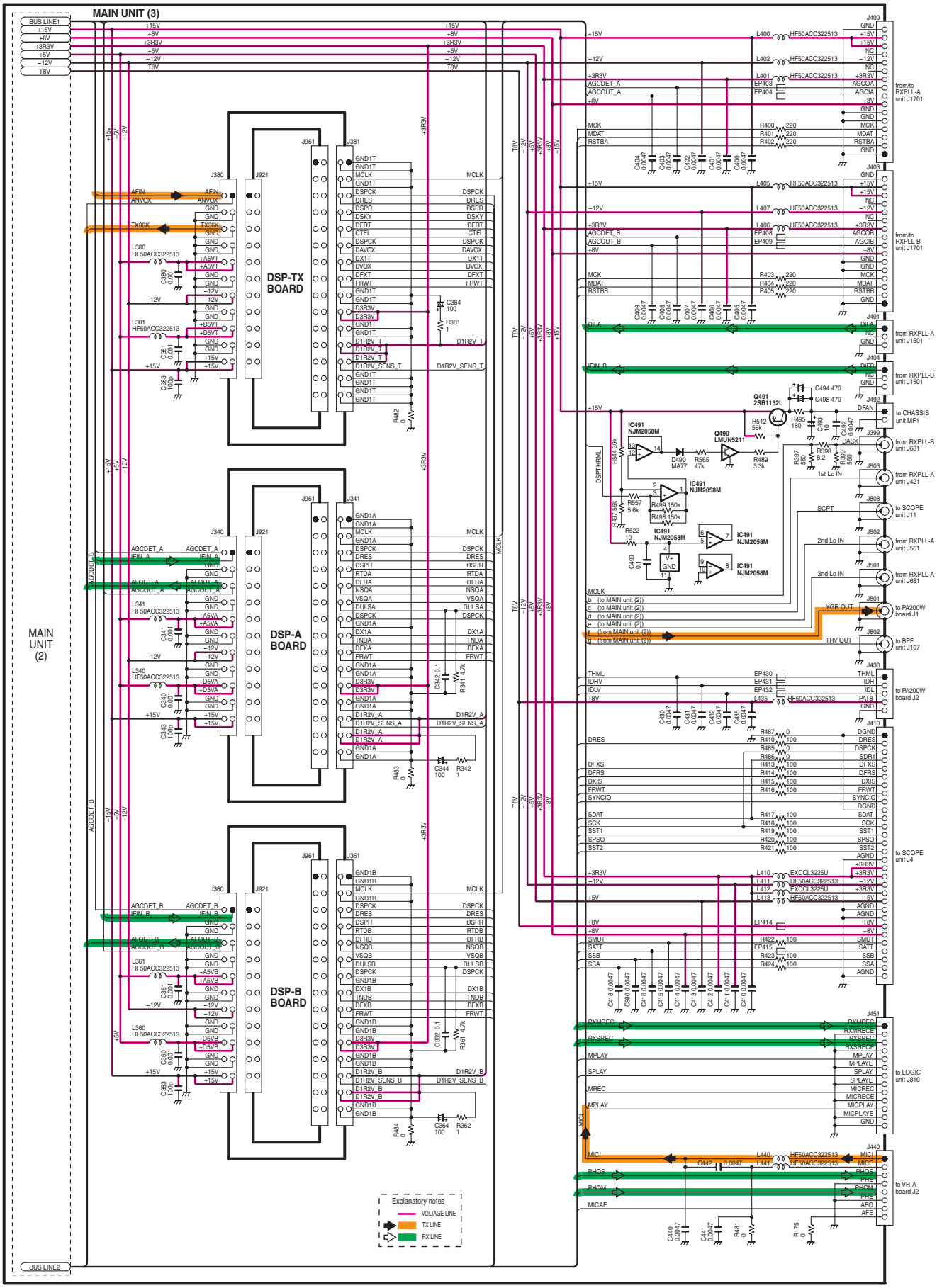
MAIN UNIT (3)
MAIN UNIT (2)
DSP-TX BOARD
DSP-A BOARD
DSP-B BOARD
Explanatory notes
VOLTAGE LINE
TX LINE
RX LINE

ICOM

# SERVICE MANUAL

THE TRANSCEVER

# IC-7800

S-14015HZ-C1-③
September 2012

Icom Inc.

## INTRODUCTION

This service manual describes the latest service information for the **IC-7800** THE TRANSCEVER at the time of publication.

| MODEL | VERSION |
|---|---|
| IC-7800 | USA |
| | EUR |
| | FRA |
| | DEN |
| | ITR |
| | UK |

## CAUTION

**NEVER** connect the transceiver to an AC outlet or to a DC power supply that uses more than specifed. This will ruin the transceiver.

**DO NOT** expose the transceiver to rain, snow or any liquids.

**DO NOT** reverse the polarities of the power supply when connecting the transceiver.

**DO NOT** apply an RF signal of more than 20 dBm (100 mW) to the antenna connector. This could damage the transceiver's front-end.

To upgrade quality, any electrical or mechanical parts and internal circuits are subject to change without notice or obligation.

## ORDERING PARTS

Be sure to include the following four points when ordering replacement parts:

1. 10-digit Icom parts numbers
2. Component name
3. Equipment model name and unit name
4. Quantity required

**<ORDER EXAMPLE>**

| | | | | | |
|---|---|---|---|---|---|
| 1110003491 | S.IC | TA31136FNG | IC-7800 | MAIN UNIT | 5 pieces |
| 8820001210 | Screw | 2438 screw | IC-7800 | Top cover | 10 pieces |

Addresses are provided on the inside back cover for your convenience.

## REPAIR NOTES

1. Make sure the problem is internal before disassembling the transceiver.
2. **DO NOT** open the transceiver until the transceiver is disconnected from its power source.
3. **DO NOT** force any of the variable components. Turn them slowly and smoothly.
4. **DO NOT** short any circuits or electronic parts. An insulated tuning tool **MUST** be used for all adjustments.
5. **DO NOT** keep power ON for a long time when the transceiver is defective.
6. **DO NOT** transmit power into a Standard Signal Generator or a Sweep Generator.
7. **ALWAYS** connect a 50 dB to 60 dB attenuator between the transceiver and a Deviation Meter or Spectrum Analyzer when using such test equipment.
8. **READ** the instructions of test equipment throughly before connecting a test equipment to the transceiver.

Icom, Icom Inc. and the Icom logo are registered trademarks of Icom Incorporated (Japan) in Japan, the United States, the United Kingdom, Germany, France, Spain, Russia and/or other countries.

# CONTENTS


**SECTION 1 SPECIFICATIONS**

**SECTION 2 INSIDE VIEWS**

2 - 1 TOP VIEW . . . . . 2 - 1
2 - 2 BOTTOM VIEW . . . . . 2 - 1
2 - 3 MAIN UNIT . . . . . 2 - 2
2 - 4 DSP-A/DSP-B BOARD . . . . . 2 - 3
2 - 5 DSP-TX BOARD . . . . . 2 - 3
2 - 6 LOGIC UNIT . . . . . 2 - 4
2 - 7 SCOPE UNIT . . . . . 2 - 4
2 - 8 RXPLL-A UNIT . . . . . 2 - 5
2 - 9 RXPLL-B UNIT . . . . . 2 - 5
2 - 10 OSC UNIT . . . . . 2 - 6
2 - 11 PA200W BOARD . . . . . 2 - 6

**SECTION 3 CIRCUIT DESCRIPTION**

**SECTION 4 ADJUSTMENT PROCEDURES**

**SECTION 5 PARTS LIST**

**SECTION 6 MECHANICAL PARTS AND DISASSEMBLY**

**SECTION 7 SEMI-CONDUCTOR INFORMATION**

**SECTION 8 BOARD LAYOUTS**

DISPLAY BOARD . . . . . 8 - 1
SW-A BOARD . . . . . 8 - 3
SW-B BOARD . . . . . 8 - 3
SW-C BOARD . . . . . 8 - 3
VR-A BOARD . . . . . 8 - 5
VR-B BOARD . . . . . 8 - 5
VR-C BOARD . . . . . 8 - 5
VR-D BOARD . . . . . 8 - 5
JACK BOARD . . . . . 8 - 5
MIC BOARD . . . . . 8 - 5
CF BOARD . . . . . 8 - 5
TENKEY BOARD . . . . . 8 - 7
LED BOARD . . . . . 8 - 7
PBT1 BOARD . . . . . 8 - 7
PBT2 BOARD . . . . . 8 - 7
LOGIC UNIT . . . . . 8 - 9
MEMORY BOARD . . . . . 8 - 11
MAIN UNIT . . . . . 8 - 13
DSP-A/DSP-B BOARDS . . . . . 8 - 15
DSP-TX BOARD . . . . . 8 - 15
SCOPE UNIT . . . . . 8 - 15

RXPLL-A UNIT . . . . . 8 - 17
RXPLL-B UNIT . . . . . 8 - 19
DIGISEL UNIT . . . . . 8 - 21
OSC UNIT . . . . . 8 - 23
ANT-SW UNIT . . . . . 8 - 25
FILTER UNIT . . . . . 8 - 27
NETWORK BOARD . . . . . 8 - 29
CTRL BOARD . . . . . 8 - 31
BPF UNIT . . . . . 8 - 33
PA200W BOARD . . . . . 8 - 35
DC-DC UNIT . . . . . 8 - 37

**SECTION 9 BLOCK DIAGRAMS**

**SECTION 10 WIRING DIAGRAMS**

**SECTION 11 VOLTAGE DIAGRAMS**

DISPLAY BOARD . . . . . 11 - 1
CF BOARD . . . . . 11 - 1
SW-A BOARD . . . . . 11 - 2
VR-B BOARD . . . . . 11 - 2
VR-C BOARD . . . . . 11 - 2
VR-A BOARD . . . . . 11 - 2
MIC BOARD . . . . . 11 - 2
JACK BOARD . . . . . 11 - 2
VR-D BOARD . . . . . 11 - 2
SW-B BOARD . . . . . 11 - 2
TENKEY BOARD . . . . . 11 - 3
SW-C BOARD . . . . . 11 - 4
PBT1 BOARD . . . . . 11 - 4
PBT2 BOARD . . . . . 11 - 4
LED BOARD . . . . . 11 - 4
LOGIC UNIT AND MEMORY BOARD . . . . . 11 - 5
MAIN UNIT . . . . . 11 - 9
DSP-A/DSP-B BOARDS . . . . . 11 - 12
DSP-TX BOARD . . . . . 11 - 13
SCOPE UNIT . . . . . 11 - 14
RXPLL-A/RXPLL-B UNITS . . . . . 11 - 18
DIGISEL UNIT . . . . . 11 - 21
OSC UNIT . . . . . 11 - 23
ANT-SW UNIT . . . . . 11 - 24
FILTER UNIT . . . . . 11 - 24
BPF UNIT . . . . . 11 - 25
NETWORK BOARD . . . . . 11 - 26
CTRL BOARD . . . . . 11 - 27
PA200W BOARD . . . . . 11 - 28
DC-DC UNIT . . . . . 11 - 29

# SECTION 1 SPECIFICATIONS

## General

- **Frequency coverage** (unit: MHz) :
  - Receiver: 0.030000–60.000000*1
  - Transmitter: 1.800000–1.999999*2, 3.500000–3.999999*2, 5.332000*3, 5.348000*3, 5.358500*3, 5.373000*3, 5.405000*3, 7.000000–7.300000*2, 10.100000–10.150000*2, 14.000000–14.350000*2, 18.068000–18.168000*2, 21.000000–21.450000*2, 24.890000–24.990000*2, 28.000000–29.700000*2, 50.000000–54.000000*2

  *1Some frequency ranges are not guaranteed.
  *2Depending on versions. *3USA version only.
- **Operating mode** : USB, LSB, CW, RTTY, PSK31, AM, FM
- **Number of memory channels** : 101 (99 regular, 2 scan edges)
- **Antenna connector** : SO-239×4 (antenna impedance: 50 Ω)
- **Operating temperature range** : 0˚C to +50˚C; +32˚F to +122˚F
- **Frequency stability** : Less than ±0.05 ppm (approximately 5 minimum after from turn the main power, [I/O], ON, 0–50˚C; 32–122˚F)
- **Frequency resolution** : 1 Hz
- **Power supply requirement** : 85–265 V AC (universal input)
- **Power consumption** :

| | | |
|---|---|---|
| Power OFF | Stand-by | 10 VA typical |
| Receive | Stand-by | 200 VA typical |
| | Maximum audio | 210 VA typical |
| Transmit | at 200 W | 800 VA |

- **Dimensions** (projections not included) : 424(W)×149(H)×435(D) mm; 16.7(W)×5.9(H)×17.1(D) in
- **Weight** : Approximately 25 kg; 55 lb
- **ACC 1 connectors** : 8-pin DIN connector×2
- **ACC 2 connectors** : 7-pin DIN connector×2
- **Display*** : 7-inch (diagonal) TFT color LCD (800×480)

## Transmitter

- **Transmit output power** :

| | |
|---|---|
| SSB, CW, RTTY, PSK31, FM | 5–200 W |
| AM | 5–50 W |
| 137 kHz band | More than –20 dBm (Except for USA version) |

- **Modulation system** :

| | |
|---|---|
| SSB | D.P.S.N. modulation |
| AM | Digital low power modulation |
| FM | Digital phase modulation |

- **Spurious emission** (For [USA]) :

| | | |
|---|---|---|
| Harmonics | HF bands | More than 60 dB (spurious frequency below 30 MHz) |
| | | More than 66 dB (spurious frequency 30 MHz or above) |
| | 50 MHz band | More than 70 dB |
| Unwanted emission (except Harmonics) | | |
| | | More than 50 dB (spurious frequency below 30 MHz) |
| | | More than 66 dB (spurious frequency 30 MHz or above) |

- **Spurious emission** (except For [USA]) :

| | | |
|---|---|---|
| Harmonics | HF bands | More than 60 dB |
| | 50 MHz band | More than 70 dB |
| Unwanted emission (except Harmonics) | | |
| | HF bands | More than 50 dB |
| | 50 MHz band | More than 66 dB |
| Out of band emission | HF bands | More than 40 dB |
| | 50 MHz band | More than 60 dB |

- **Carrier suppression** : More than 63 dB
- **Unwanted side-band suppression** : More than 80 dB
- **∆TX variable range** : ±9.999 kHz
- **Microphone connector** : 8-pin connector (600 Ω)

## Receiver

- **Receive system** : Double conversion superheterodyne system
- **Intermediate frequencies** :
  - 1st: 64.455 MHz (MAIN band); 64.555 MHz (SUB band)
  - 2nd: 36 kHz
- **Sensitivity** :

SSB, CW, RTTY (BW=2.4 kHz, 10 dB S/N)

| | |
|---|---|
| 0.100–1.799 MHz | 0.5 µV (pre-amp 1 ON) |
| 1.800–29.990 MHz | 0.16 µV (pre-amp 1 ON) |
| 50.000–54.000 MHz | 0.13 µV (pre-amp 2 ON) |

AM (BW=6 kHz, 10 dB S/N)

| | |
|---|---|
| 0.100–1.799 MHz | 6.3 µV (pre-amp 1 ON) |
| 1.800–29.990 MHz | 2 µV (pre-amp 1 ON) |
| 50.000–54.000 MHz | 1 µV (pre-amp 2 ON) |

FM (BW=15 kHz, 12 dB SINAD)

| | |
|---|---|
| 28.000–29.990 MHz | –6 dBu (pre-amp 1 ON) |
| 50.000–54.000 MHz | –10.0 dBu (pre-amp 2 ON) |

- **Selectivity** :

| | |
|---|---|
| SSB, LSB, RTTY (BW=2.4 kHz) | More than 2.4 kHz/–3 dB<br>Less than 3.6 kHz/–60 dB |
| CW (BW=500 Hz) | More than 500 Hz/–3 dB<br>Less than 700 Hz/–60 dB |
| AM (BW=6 kHz) | More than 6.0 kHz/–3 dB<br>Less than 15.0 kHz/–60 dB |
| FM (BW=15 kHz) | More than 12.0 kHz/–6 dB<br>Less than 20.0 kHz/–60 dB |

- **Spurious and image rejection ratio** : More than 70 dB (except IF through on 50 MHz band)
- **Squelch sensitivity** :
  - SSB, CW, RTTY, PSK31: Less than +15dBu
  - FM: Less than 0dBu
- **RIT variable range** : ±9.999 kHz
- **Audio output power** : More than 2.6 W at 10% distortion with an 8 Ω load

## Antenna tuner

- **Matching impedance range** : 16.7 to 150 Ω unbalanced (HF bands; VSWR better than 3:1)
  20 to 125 Ω unbalanced (50 MHz band; VSWR better than 2.5:1)
- **Minimum operating input** : 8 W (HF bands)
  15 W (50 MHz band)
- **Tuning accuracy** : VSWR 1.5:1 or less
- **Insertion loss** (after tuning) : Less than 1.0 dB

*The LCD display may have cosmetic imperfections that appear as small or dark spots. This is not a malfunction or defect, but a normal characteristic of LCD displays.

Spurious signals may be received near the following frequencies. These are made in the internal circuit and does not indicate a transceiver malfunction.

• 0.150 MHz • 10.490 MHz

Spurious waveforms may be displayed on the spectrum scope screen regardless of the transceiver's condition (Tx or Rx). They are made in the scope circuit. This does not indicate a transceiver malfunction.

All stated specifications are typical and subject to change without notice or obligation.

# SECTION 2 INSIDE VIEWS

## 2-1 UPPER SIDE

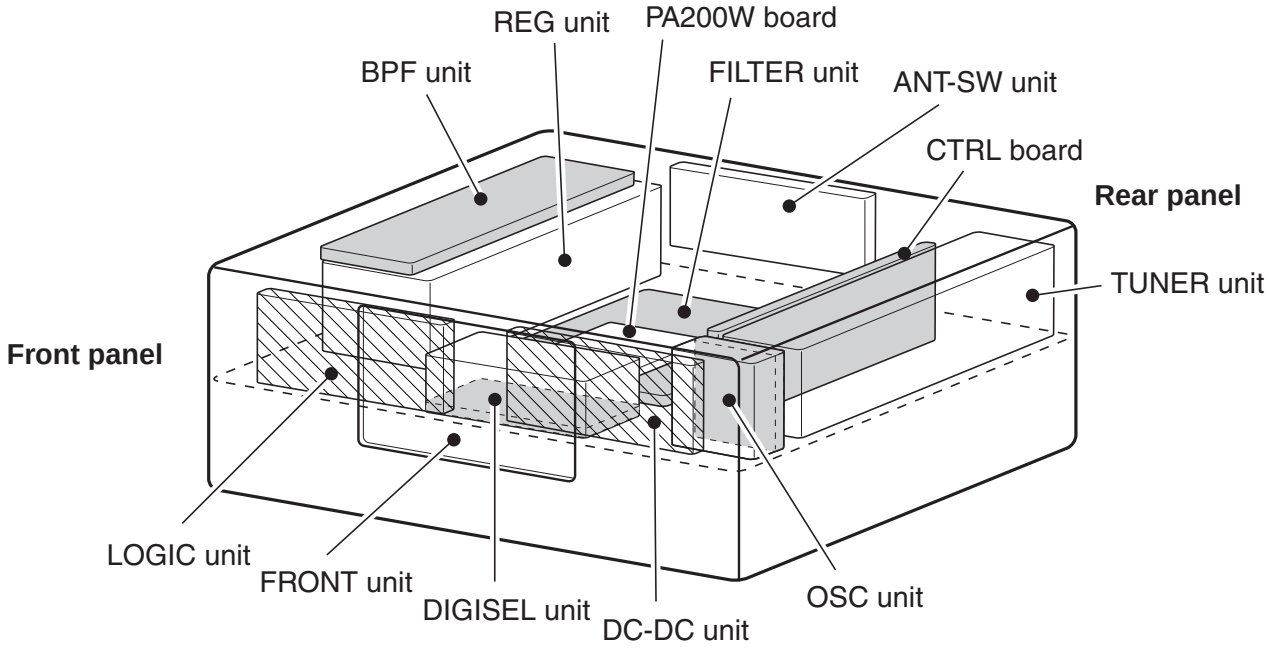


## 2-2 LOWER SIDE

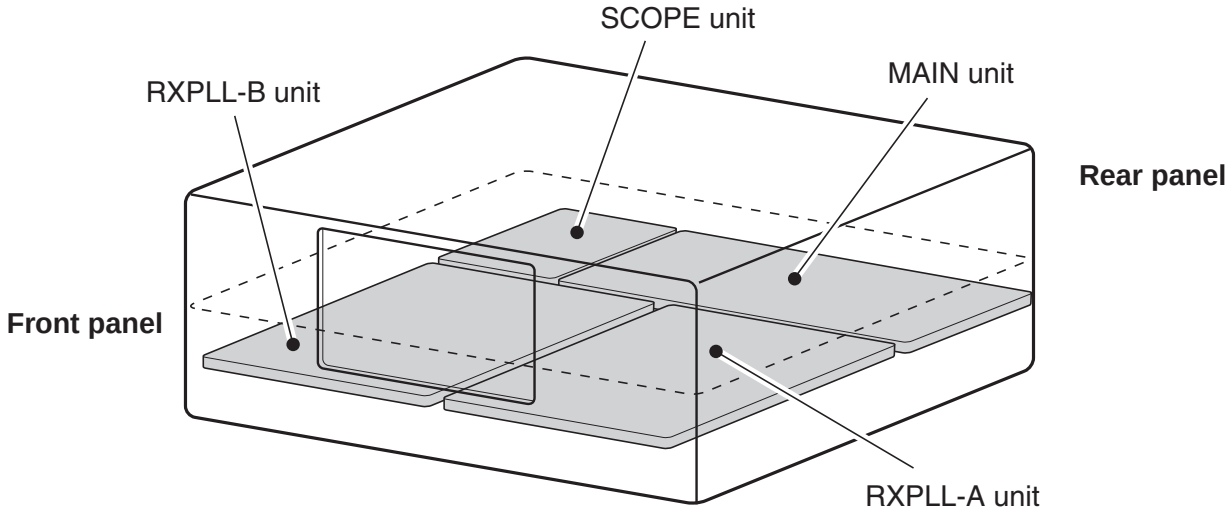

## 2-3 TOP VIEW

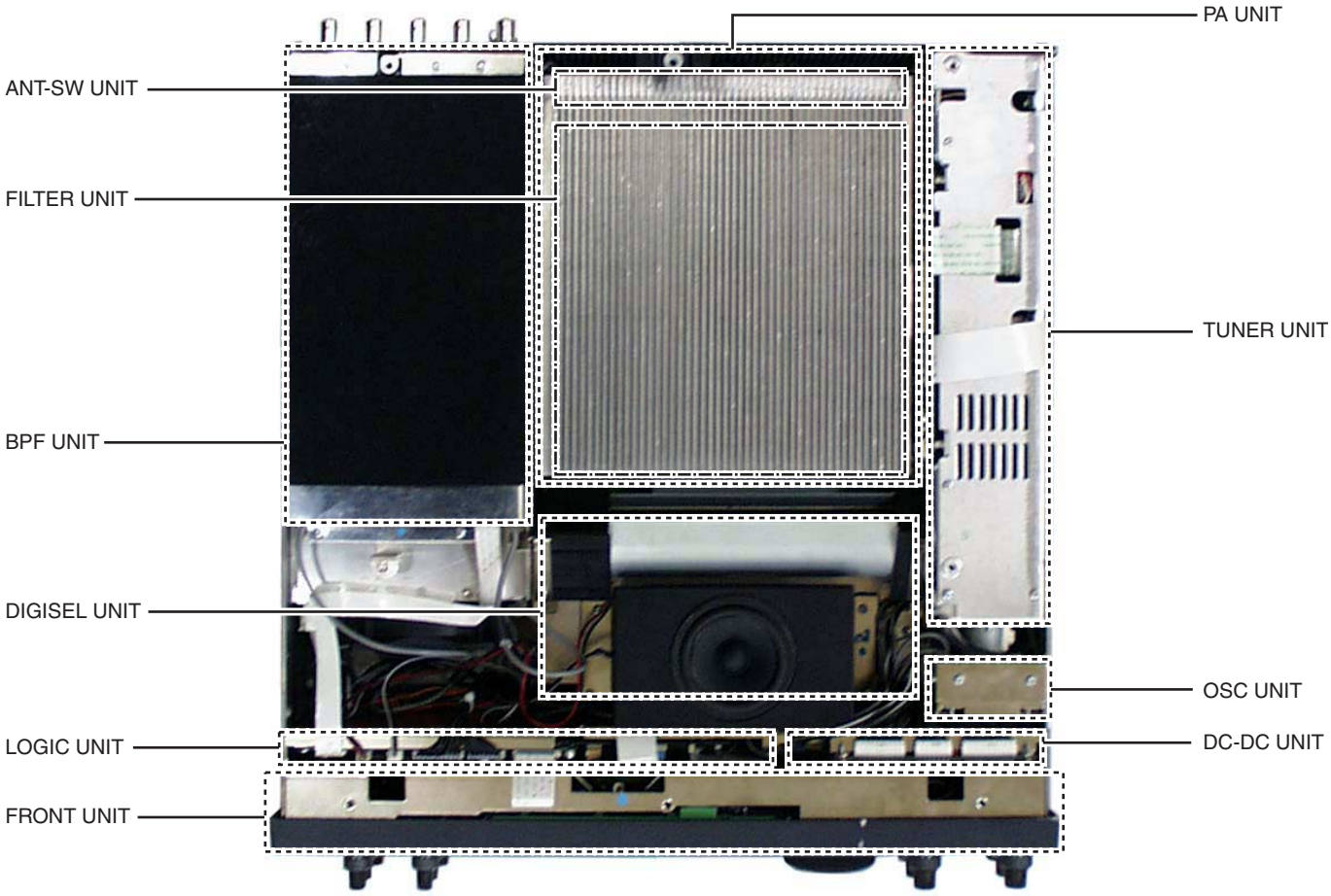


## 2-4 BOTTOM VIEW

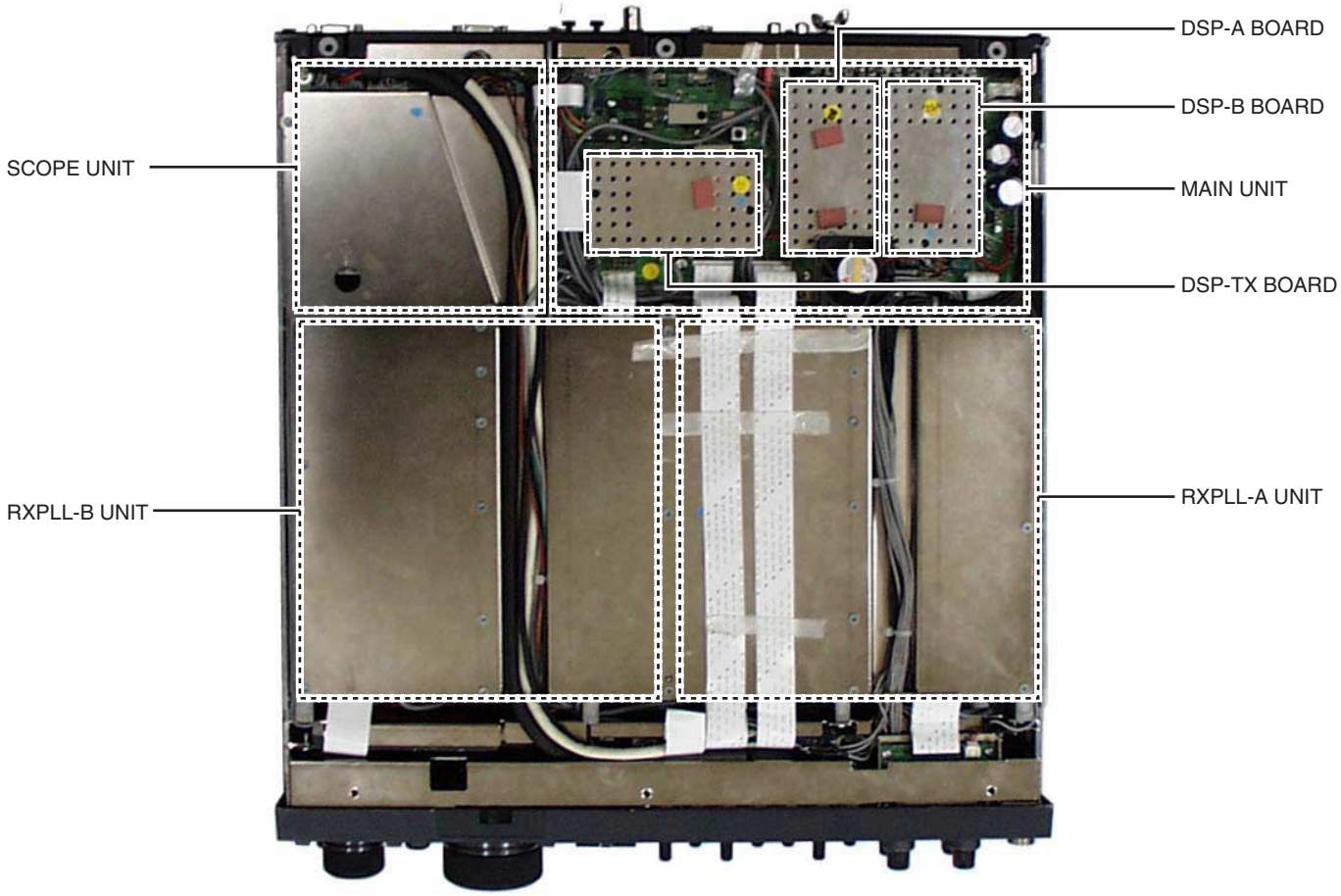

## 2-5 MAIN UNIT

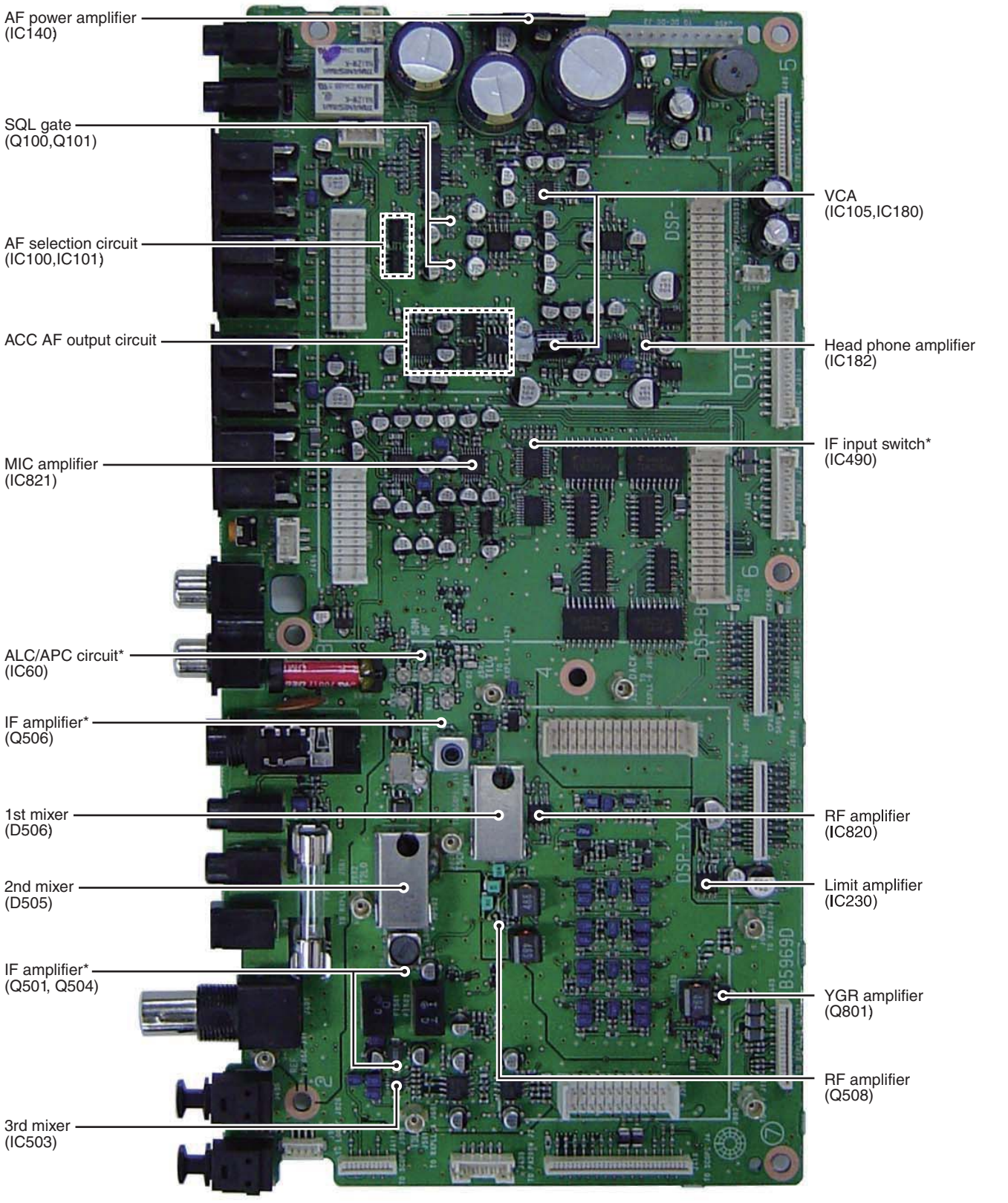


*Located under side of the point

## 2-6 DSP-A/DSP-B BOARDS

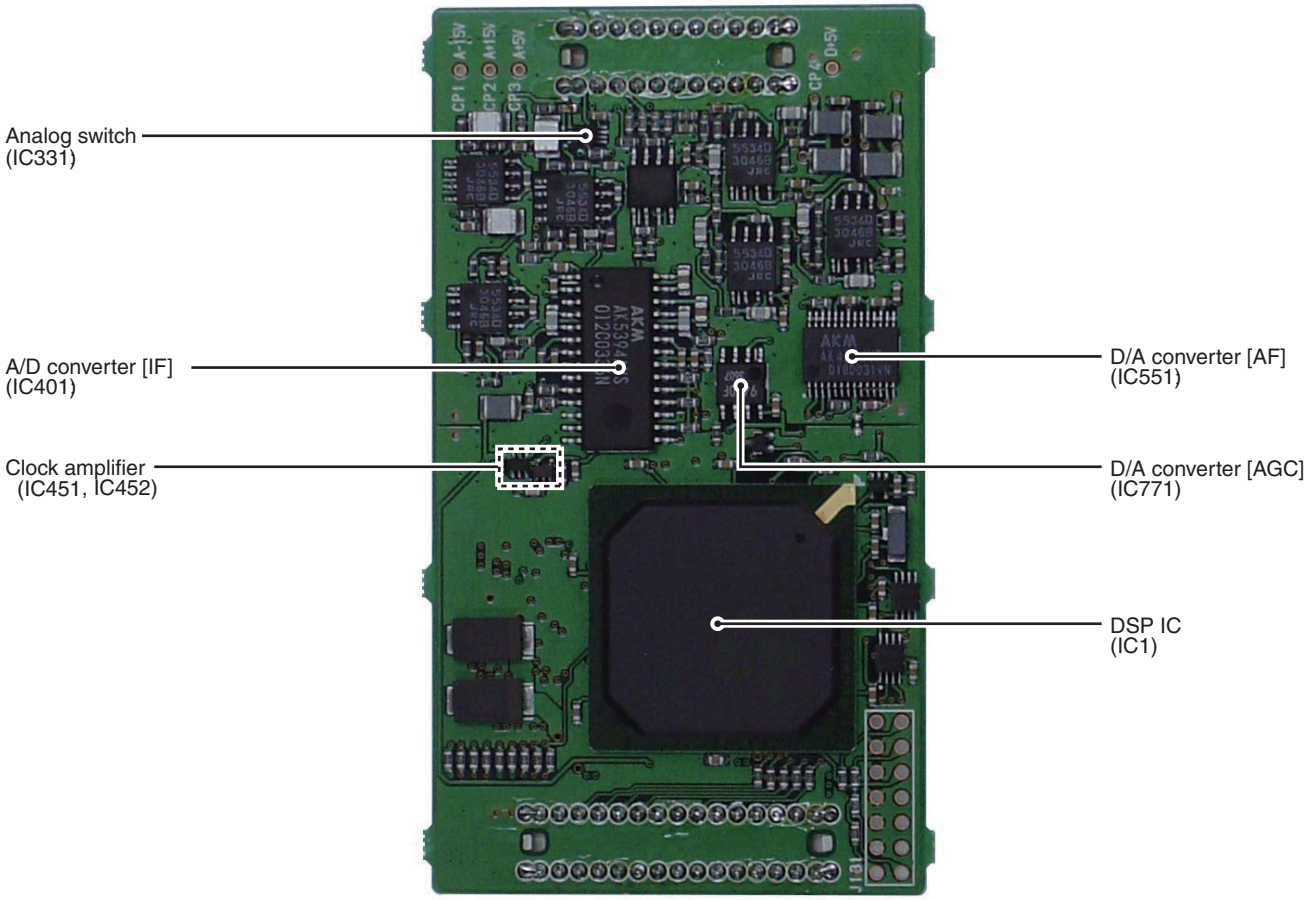


## 2-7 DSP-TX BOARD

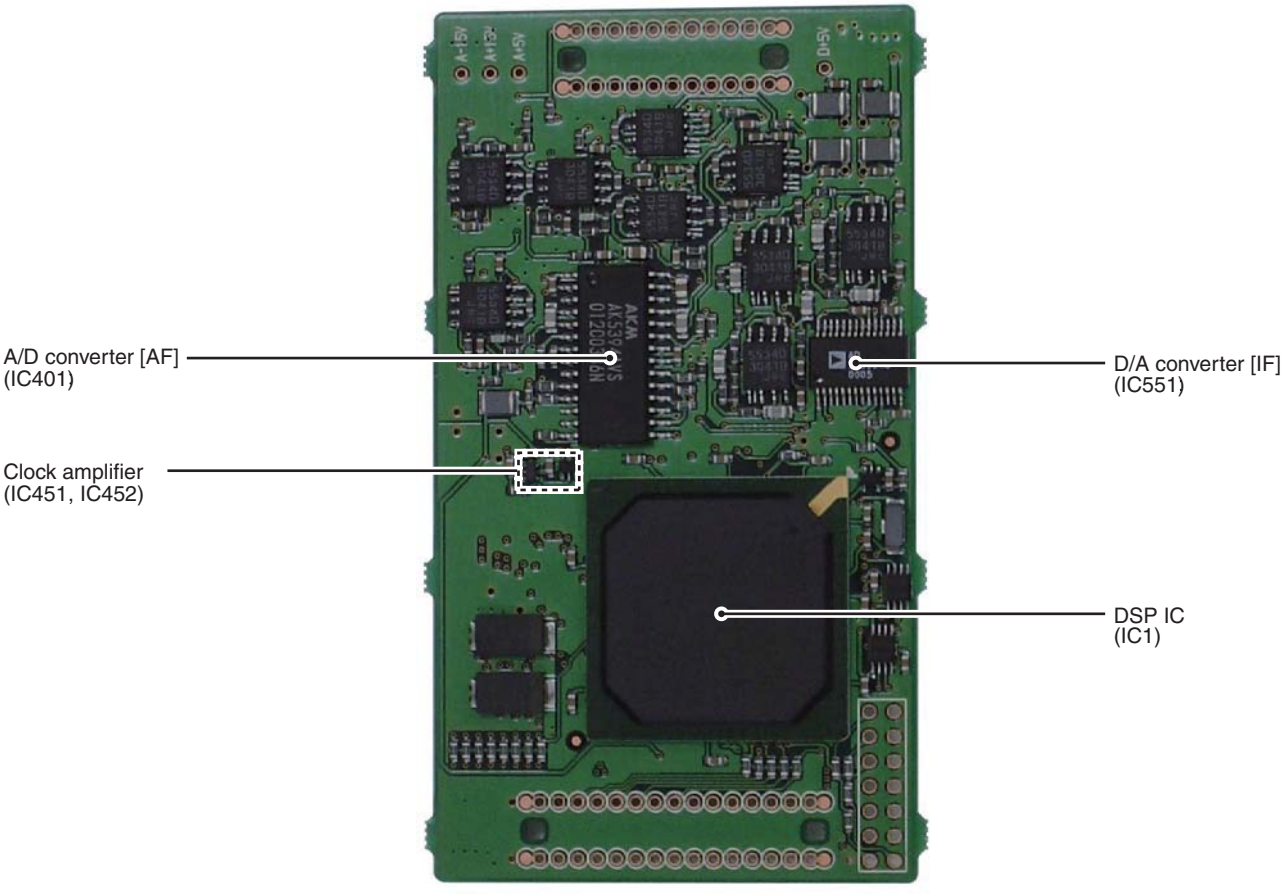

## 2-8 LOGIC UNIT

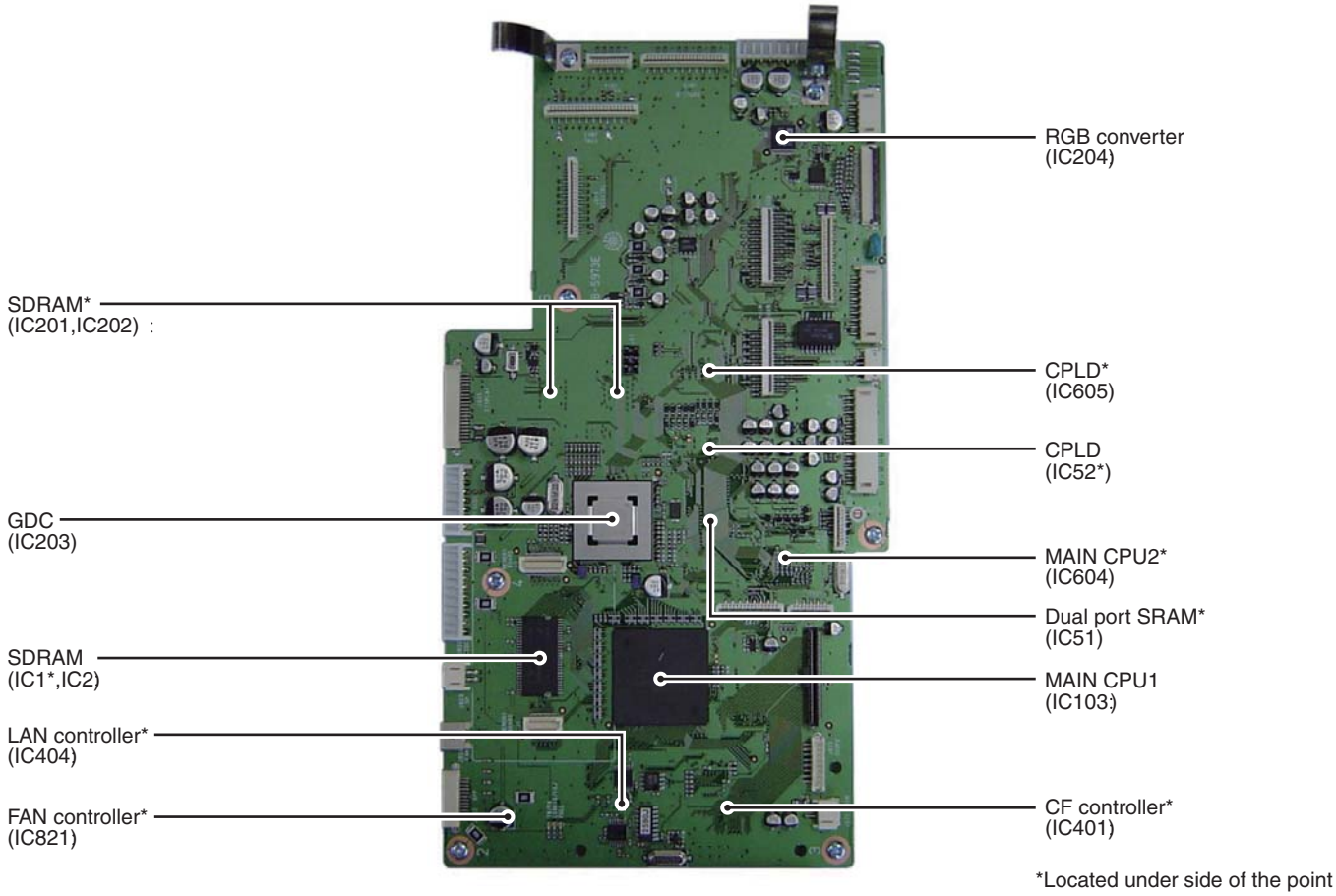


*Located under side of the point

## 2-9 SCOPE UNIT

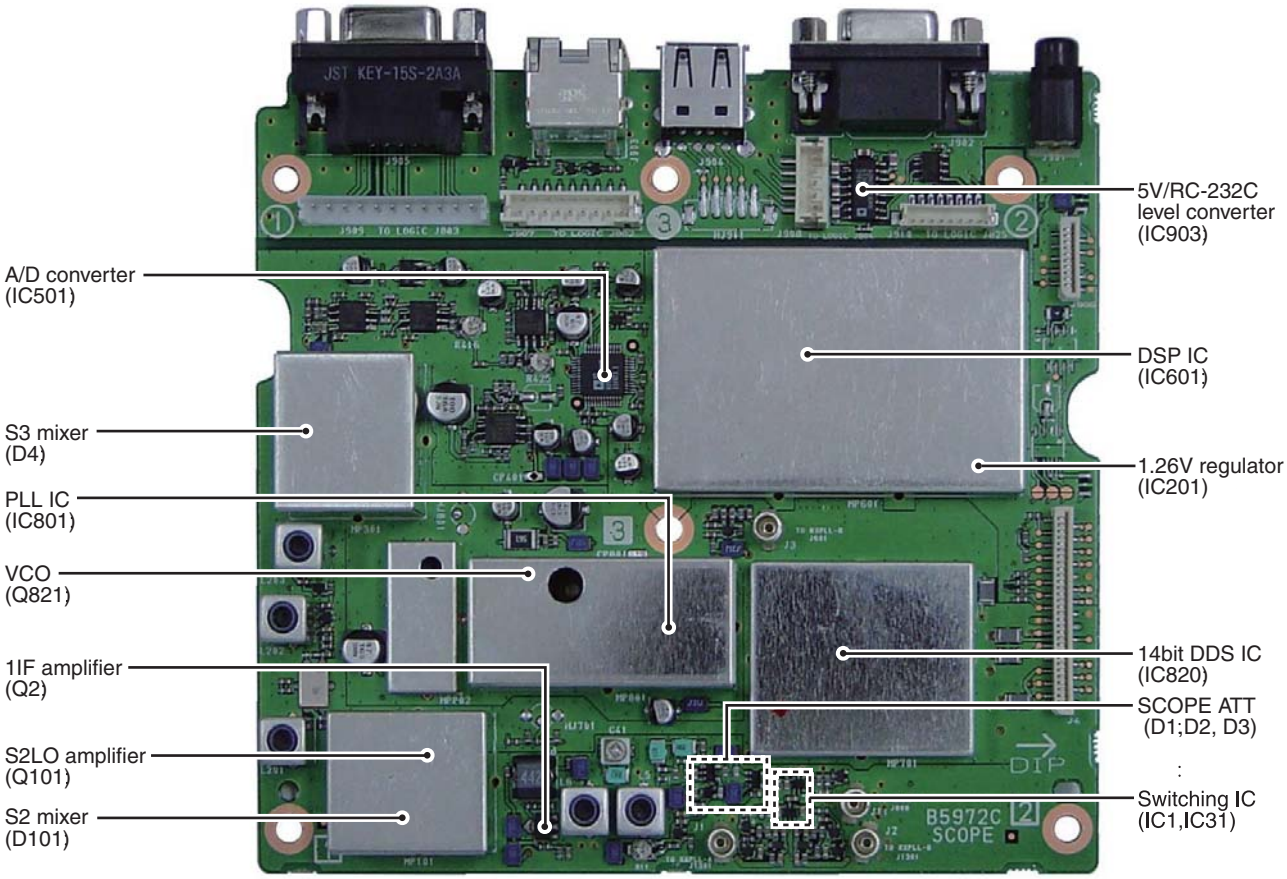

## 2-10 RXPLL-A BOARD

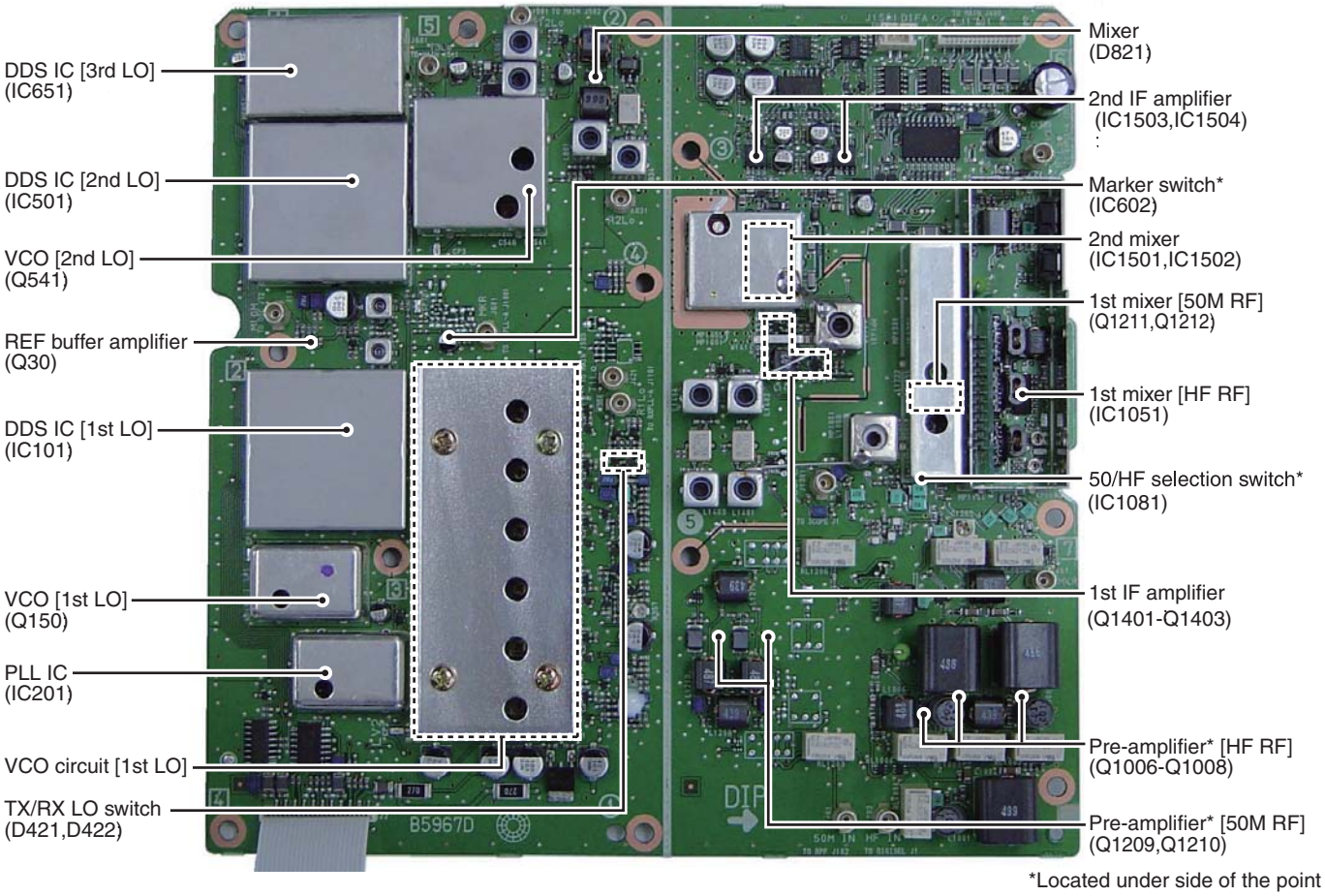


*Located under side of the point

## 2-11 RXPLL-B UNIT

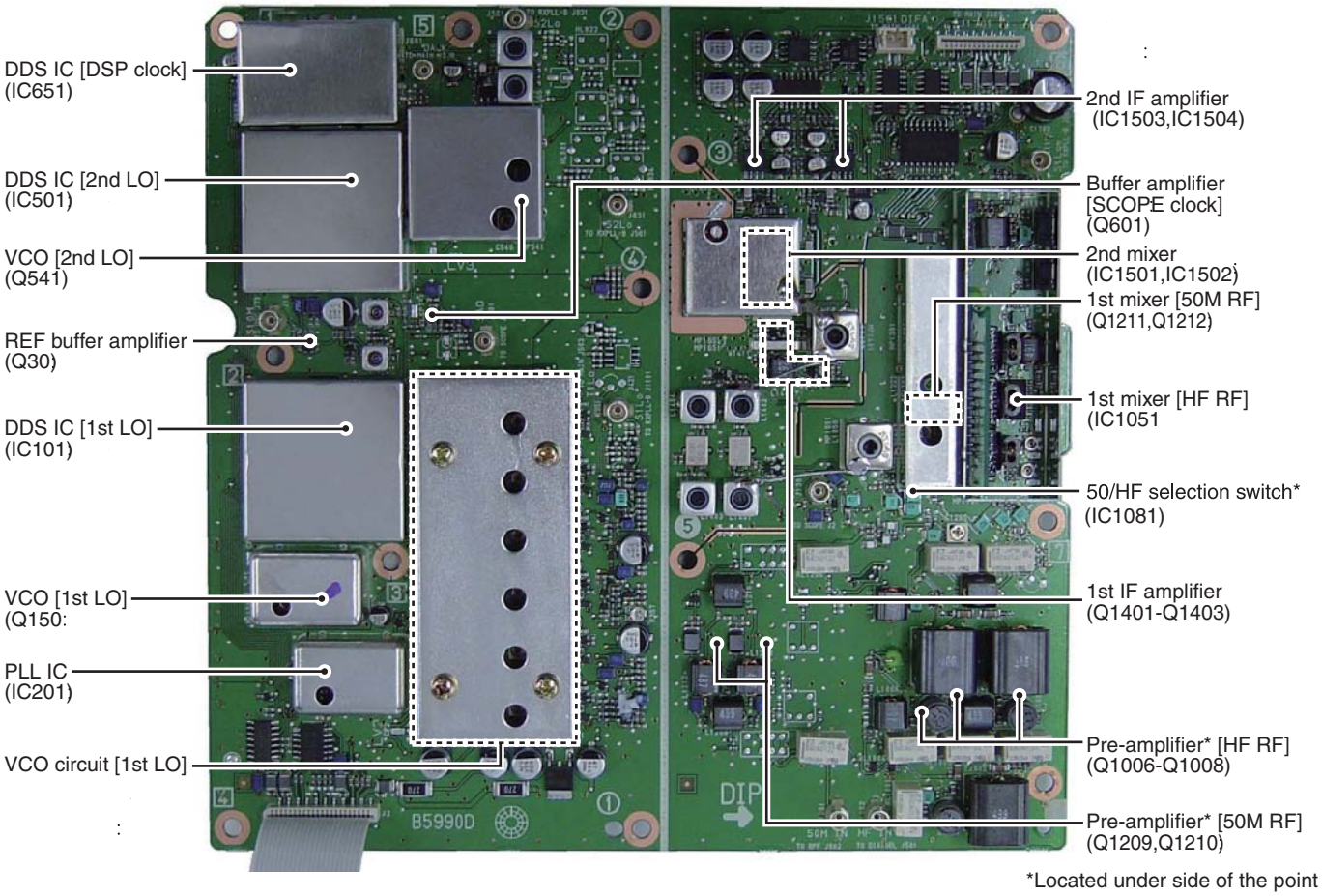


*Located under side of the point

## 2-12 OSC UNIT

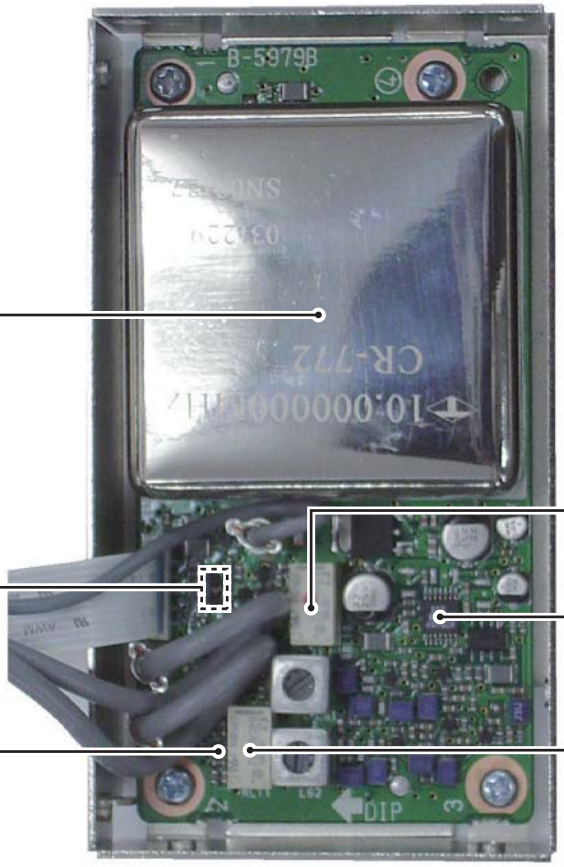


## 2-13 PA200W BOARD

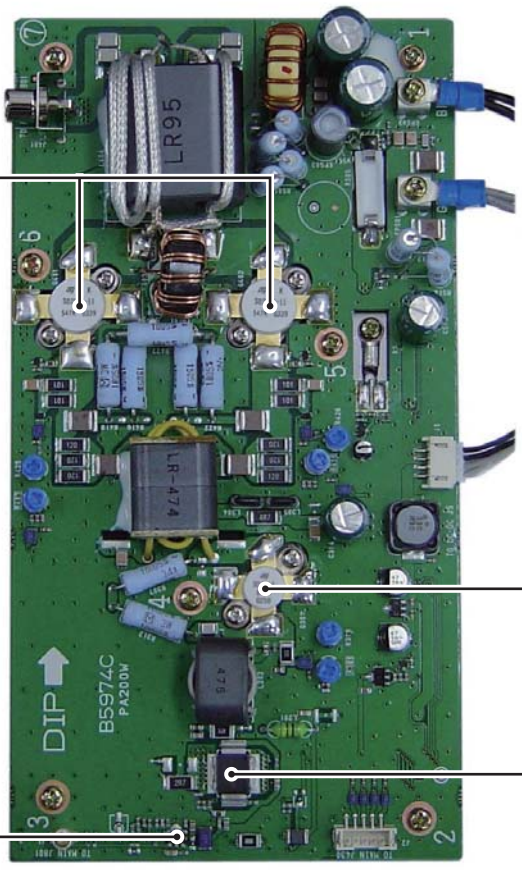

# SECTION 3 CIRCUIT DESCRIPTION

## 3-1 RECEIVER CIRCUITS

### 3-1-1 ANTENNA SWITCHING CIRCUIT (ANT-SW UNIT)

The ANTENNA switching circuit leads receive signals to bandpass filters from an antenna connector while receiving. However, the circuit leads the signal from the RF power amplifier to the antenna connector while transmitting.
RF signals are applied to the RX-A, RX-B or RX-ONLY circuits.

**• RX-A CIRCUIT**
RF signals from [ANT1], [ANT2], [ANT3] or [ANT4] pass through one of the antenna selectors (RL51; passing through [ANT1], RL61; passing through [ANT2], RL71; passing through [ANT3], RL81; passing through [ANT4]), and are then applied to the CTRL board via J1.

The RF signals pass through the current detector (CTRL board; D301, D302), and are then applied to the BPF unit via J351 on the CTRL board.

**• RX-B CIRCUIT**
RF signals from [ANT1], [ANT2], [ANT3] or [ANT4] pass through one of the antenna selectors (RL52; passing through [ANT1], RL62; passing through [ANT2], RL72; passing through [ANT3], RL82; passing through the ANT4), and are then applied to the BPF unit via J2.

**• RX-ONLY CIRCUIT**
RF signals from [ANT4] pass through the antenna selector (RL84), and are then applied to the BPF unit via J3.

### 3-1-2 BANDPASS FILTER CIRCUIT (BPF, AND DIGISEL UNITS)

RF bandpass filters pass only the desired band signals and suppress any undesired band signals. The RF circuit has 11 bandpass filters and 1 low-pass filter.

**• RX-A OR RX-ONLY CIRCUITS**
RF signals from RX-A circuit (CTRL board; J351) or RX-ONLY circuit (ANT-SW unit; J3) are applied to the RF signal switching circuit (BPF unit; RL402). The filtered signals pass through (or bypass) splitter (BPF unit; L371–L373) via the RL371 and RL355 (BPF unit), and are then attenuated at RL354 (3 dB), RL353 (6 dB) and RL352 (12 dB) on the BPF unit. A portion of the filtered signals are separated at the splitter, and are then applied to the RX-B circuit's DW selector (BPF unit; RL855).

The attenuated signals pass through the low-pass filter or one of the bandpass filters via the 6M selector (BPF unit; RL851).

**(1) 0.03–30 MHz (BPF AND DIGISEL UNITS)**
The signals pass through the low-pass filter or one of the 9 bandpass filters. The filtered signals pass through (or bypass) the bandpass filter and the RF amplifier (DIGISEL unit; Q201) via the D_S_THRU selectors (RL21, RL2) on the DIGISEL unit, and are then applied to the pre-amplifier circuit on the RXPLL-A unit.

**(2) 50–60 MHz (BPF UNIT)**
The signals pass through the one of the 2 bandpass filters, and are then amplified (or bypass) at the DW amplifier (Q901) via the DW selectors (RL900, RL901). The signals are applied to (or bypass) the pre-amplifier circuit.

**• RX-B CIRCUIT**
RF signals from RX-B circuit (ANT-SW unit; J2) pass through the REV_Po detector (BPF unit; Q873, D872). The signals are applied to the DW selector (BPF unit; RL855). A portion of RF signals from RX-A or RX-ONLY circuits are applied to the this selector too.

The signals are attenuated at RL854 (3 dB), RL853 (6 dB) and RL852 (12 dB) on the BPF unit, and are then applied to the 6M selector (BPF unit; RL851).

The attenuated signals pass through the low-pass filter or one of the bandpass filters.

**(1) 0.03–30 MHz (BPF AND DIGISEL UNITS)**
The signals pass through the low-pass filter or one of the 9 bandpass filters. The filtered signals pass through (or bypass) the bandpass filter and the RF amplifier (DIGISEL unit; Q701) via the D_S_THRU selectors (RL521, RL502) on the DIGISEL unit, and are then applied to the pre-amplifier circuit on the RXPLL-B unit.

**(2) 50–60 MHz (BPF UNIT)**
The signals pass through the one of the 2 bandpass filter, and are then amplified (or bypass) at the DW amplifier (Q951) via the DW selectors (RL950, RL951). The signals are applied to the pre-amplifier circuit.

### 3-1-3 PRE-AMPLIFIER CIRCUITS (BPF, RXPLL-A, AND RXPLL-B UNITS)

The IC-7800 has 2 gain levels of pre-amplifier circuits which is composed of the pre-amplifier1 and pre-amplifier2. The circuit is controlled by [P.AMP] switch.

**• RX-A OR RX-ONLY CIRCUITS**
**(1) 0.03–30 MHz (RXPLL-A UNIT)**
The RF signals from the DIGISEL unit are applied to (or bypass) the DW amplifier (Q1001) via the DW selectors (RL1001, RL1002), and are then applied to the pre-amplifier circuit.

When [P.AMP] switch is set to [P.AMP 1] or [P.AMP 2], the signals are applied to the pre-amplifier1 (Q1007, Q1008) or pre-amplifier2 (Q1006) circuit via the P.AMP_ON selectors (RL1003, RL1006) and P.AMP selectors (RL1004, RL1005), respectively. Pre-amplified or bypassed signals are applied to the 1st mixer circuit after being passed through the low-pass filter (L1052–L1054, C1053–C1057, C1067).

**(2) 50–60 MHz (BPF AND RXPLL-A UNITS)**
When [P.AMP] switch is set to [P.AMP 1] or [P.AMP 2], the amplified signals from the DW amplifier (BPF unit; Q901) are applied to the pre-amplifier2 (BPF unit; Q903) or pre-amplifier1 (RXPLL-A unit; Q1209, Q1210) via the P.AMP2_ON selectors (BPF unit; RL902, RL903) and P.AMP1_ON selectors (RXPLL-A unit; RL1203, RL1206), respectively. Pre-amplified or bypassed signals are applied to the 1st mixer circuit after being passed through the low-pass filter (RXPLL-A unit; L1217–L1219, C1244–C1250, C1268).

### • RX-B CIRCUIT
**(1) 0.03–30 MHz (RXPLL-B UNIT)**
The RF signals from the DIGISEL unit are applied to (or bypass) the DW amplifier (Q1001) via the DW selectors (RL1001, RL1002), and are then applied to the pre-amplifier circuit.

When [P.AMP] switch is set to [P.AMP 1] or [P.AMP 2], the signals are applied to the pre-amplifier1 (Q1007, Q1008) or pre-amplifier2 (Q1006) circuit via the P.AMP_ON selectors (RL1003, RL1006) and P.AMP selectors (RL1004, RL1005), respectively. Pre-amplified or bypassed signals are applied to the 1st mixer circuit after being passed through the low-pass filter (L1052–L1054, C1053–C1057, C1067).

**(2) 50–60 MHz (BPF AND RXPLL-B UNITS)**
When [P.AMP] switch is set to [P.AMP 1] or [P.AMP 2], the amplified signals from the DW amplifier (BPF unit; Q961) are applied to the pre-amplifier2 (BPF unit; Q953) or pre-amplifier1 (RXPLL-B unit; Q1209, Q1210) via the P.AMP2_ON selectors (BPF unit; RL952, RL953) and P.AMP1_ON selectors (RXPLL-B unit; RL1203, RL1206), respectively. Pre-amplified or bypassed signals are applied to the 1st mixer circuit after being passed through the low-pass filter (RXPLL-B unit; L1217–L1219, C1244–C1250, C1268).

## 3-1-4 1ST MIXER CIRCUIT (RXPLL-A AND RXPLL-B UNITS)
The 1st mixer circuit mixes the receive signals with the 1st LO signal to convert the receive signal frequencies into a 64.455 MHz (main) or 64.555 MHz (sub) 1st IF signal. The IC-7800 has four 1st mixer circuits for the dualwatch function.

### • RX-A OR RX-ONLY CIRCUITS (RXPLL-A UNIT)
**(1) 0.03–30 MHz**
The filtered signals pass through the L1055, and are then applied to the 1st mixer circuit (IC1051). The applied signals are mixed with 1st LO signal from the RXPLL-A circuit to convert into a fixed 64.455 MHz 1st IF signal.

The converted 1st IF signal is applied to the 50/HF selector (IC1081, pin 1).

**(2) 50–60 MHz**
The filtered signals pass through the L1220, and are then applied to the 1st mixer circuit (Q1211, Q1212). The applied signals are mixed with 1st LO signal from the RXPLL-A circuit to convert into a fixed 64.455 MHz 1st IF signal.

The converted 1st IF signal is applied to the 50/HF selector (IC1081, pin 3).

The selected 1st IF signal passes through the low-pass filter (L1058, L1060, L1062, L1063, C1061, C1062, C1064, C1066, C1070, C1074, R1054), and is then applied to the 1st IF circuit.

### • RX-B CIRCUIT (RXPLL-B UNIT)
**(1) 0.03–30 MHz**
The filtered signals pass through the L1055, and are then applied to the 1st mixer circuit (IC1051). The applied signals are mixed with 1st LO signal from the RXPLL-B circuit to convert into a fixed 64.555 MHz 1st IF signal.

The converted 1st IF signal is applied to the 50/HF selector (IC1081, pin 1).

**(2) 50–60 MHz**
The filtered signals pass through the L1220, and are then applied to the 1st mixer circuit (Q1211, Q1212). The applied signals are mixed with 1st LO signal from the RXPLL-B circuit to into a fixed 64.555 MHz 1st IF signal.

The converted 1st IF signal is applied to the 50/HF selector (IC1081, pin 3).

The selected 1st IF signal passes through the low-pass filter (L1058, L1060, L1062, L1063, C1061, C1062, C1064, C1066, C1070, C1074, R1054), and is then applied to the 1st IF circuit.

### • RECEIVER CONSTRUCTION

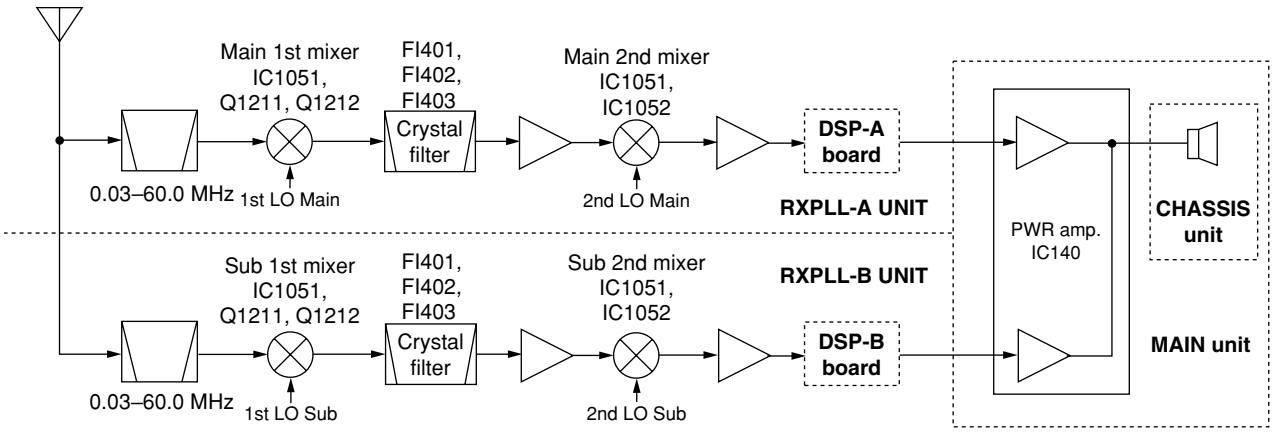

### 3-1-5 1ST IF CIRCUIT (RXPLL-A AND RXPLL-B UNITS)

The 1st IF circuit filters and amplifies the 1st IF signal. The 1st IF signal from the 1st mixer circuit is applied to an MCF (Monolithic Crystal Filter) to suppress out-of-band signals.

**• RX-A OR RX-ONLY CIRCUITS (RXPLL-A UNIT)**

The filtered 1st IF signal from the low-pass filter passes through the one of the three crystal bandpass (roofing) filters (FI1401: bandwidth is 15 kHz, FI402: bandwidth is 6 kHz or FI403: bandwidth is 3 kHz) via the FIL selectors (IC1402, IC1403). The filtered signal is amplified at the 1st IF amplifiers (Q1401–Q1403) via the low-pass filter (L1405, L1406, C1420, C1421). The amplified 1st IF signal is applied to the 2nd mixer circuit.

**• RX-B CIRCUIT (RXPLL-B UNIT)**

The filtered 1st IF signals from the low-pass filter passes through the one of the three crystal bandpass (roofing) filters (FI1401: bandwidth is 15 kHz, FI1402: bandwidth is 6 kHz or FI1403: bandwidth is 3 kHz) via the FIL selectors (IC1402, IC1403). The filtered signal is amplified at the 1st IF amplifiers (Q1401–Q1403) via the low-pass filter (L1405, L1406, C1420, C1421), and is then applied to the 2nd mixer circuit.

### 3-1-6 2ND MIXER CIRCUIT (RXPLL-A AND RXPLL-B UNITS)

The 2nd mixer circuit mixes the amplified 1st IF signal and 2nd LO signal for conversion into the 2nd IF signal.

**• RX-A OR RX-ONLY CIRCUITS (RXPLL-A UNIT)**

The 1st IF signal from the 1st IF amplifiers (Q1401–Q1403) is applied to the 2nd mixer circuit (IC1501, pin 4, IC1502, pin 4) respectively. The applied signals are mixed with 2nd LO signal from the RXPLL-A circuit to convert into 36 kHz 2nd IF signal.

The 2nd IF signal from the 2nd mixer circuit (IC1501, pin 5) is amplified at the buffer amplifier (Q1501), and is then applied to the 2nd IF amplifier (IC1503, pin 3). The signal is applied to the 90 degrees transphasor (IC1505, pin 6).

The 2nd IF signal from the other 2nd mixer circuit (IC1502, pin 5) is amplified at the buffer amplifier (Q1502), and is then applied to the 2nd IF amplifier (IC1504, pin 3). The signal is applied to the 90 degrees transphasor (IC1505, pin 2).

The signals from the 90 degrees transphasor (IC1505, pins 1, 7) are applied to the compositor (IC1505, pins 9, 10). The signal is amplified at other 2nd IF amplifier (IC1506), and is then applied to the DSP-A board to demodulate 2nd IF signal.

A portion of 2nd IF signal from the compositor (IC1505, pin 8) is applied to the AGC detector circuit.

The 2nd mixer circuit has 2 mixers and 90 degrees transphasor to improve image rejection ratio.

**• RX-B CIRCUIT (RXPLL-B UNIT)**

The 1st IF signal from the 1st IF amplifiers (Q1401–Q1403) is applied to the 2nd mixer circuit (IC1501, pin 4, IC1502, pin 4) respectively. The applied signals are mixed with 2nd LO signal from the RX-B circuit to convert into 36 kHz 2nd IF signal.

The 2nd IF signal from the 2nd mixer circuit (IC1501, pin 5) is amplified at the buffer amplifier (Q1501), and is then applied to the 2nd IF amplifier (IC1503, pin 3). The signal is applied to the 90 degrees transphasor (IC1505, pin 6).

The 2nd IF signal from the other 2nd mixer circuit (IC1502, pin 5) is amplified at the buffer amplifier (Q1502), and is then applied to the 2nd IF amplifier (IC1504, pin 3). The signal is applied to the 90 degrees transphasor (IC1505, pin 2).

The signals from the 90 degrees transphasor (IC1505, pins 1, 7) are applied to the compositor (IC1505, pins 9, 10). The signal is amplified at other 2nd IF amplifier (IC1506), and is then applied to the DSP-B board to demodulate 2nd IF signal.

A portion of 2nd IF signal from the compositor (IC1505, pin 8) is applied to the AGC detector circuit.

The 2nd mixer circuit has 2 mixers and 90 degrees transphasor to improve image rejection ratio.

**• DSP CIRCUIT (RECEIVER)**

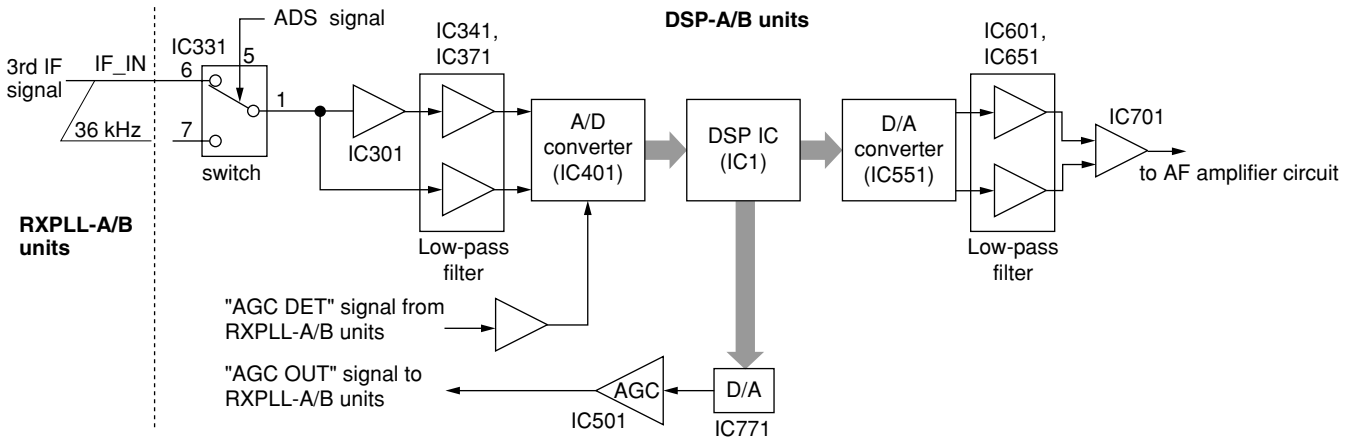

### 3-1-7 DSP RECEIVER CIRCUIT (DSP-A AND DSP-B BOARDS)

The DSP (Digital Signal Processor) circuit enables digital IF filter, digital noise reduction, digital PSN (Phase Shift Network)/Low Power/Phase demodulation, digital automatic notch, etc.

**• RX-A AND RX-ONLY CIRCUITS (DSP-A BOARD)**

The 36 kHz 2nd IF signal from the 2nd IF amplifier (RXPLL-A unit, IC1506) passes through the analog switch (IC331, pins 1, 7) with limiter function, and is then applied to the buffer amplifiers (IC301, pin 2, IC341, pin 2, IC371, pin 2) to convert to balancing signal. The signal is applied to the A/D convertor (IC401, pins 4, 5).

The converted digital signals are applied to the DSP IC (IC1) to do filtering, demodulate and so on. The demodulated digital signals are applied to the D/A convertor (IC551) to convert into analog AF signals.

The converted analog AF signals pass through the low-pass filter (IC601, pins 3, 6, IC651, pins 3, 6), and are then applied to the buffer amplifier (IC701, pins 2, 3) to convert into unbalancing signals.

The signals are applied to the AF amplifier circuit.

**• RX-B CIRCUIT (DSP-B BOARD)**

The 36 kHz 2nd IF signal from the 2nd IF amplifier (RXPLL-B unit, IC1506) passes through the analog switch (IC331, pins 1, 7) with limiter function, and is then applied to the buffer amplifiers (IC301, pin 2, IC341, pin 2, IC371, pin 2) to convert to balancing signal. The signal is applied to the A/D convertor (IC401, pins 4, 5).

The converted digital signals are applied to the DSP IC (IC1) to do filtering, demodulate and so on. The demodulated digital signals are applied to the D/A convertor (IC551) to convert into analog AF signals.

The converted analog AF signals pass through the low-pass filter (IC601, pins 3, 6, IC651, pins 3, 6), and are then applied to the buffer amplifier (IC701, pins 2, 3) to convert into unbalancing signals.

The signals are applied to the AF amplifier circuit.

### 3-1-8 AF AMPLIFIER CIRCUITS (MAIN UNIT)

The AF amplifier circuits amplifies the AF input signals to the suitable driving level for the speaker.

**• MAIN SPEAKER OUTPUT**

The AF signals from the DSP-A and DSP-B boards are applied to the AF switch (MAIN unit: IC100, pin 7 for DSP-A, pin 6 for DSP-B), and pass through the SQL switch (Q100) which is controlled by “SQLM” signal. The signals are applied to the buffer amplifier (IC102, pin 3), and are then amplified at the VCA (Voltage Control Amplifier) circuit (IC105, pin 14). The amplified signals from the VCA circuit (pin 11) are applied to the AF power amplifier (IC140, pin 1) to obtain the suitable driving level for speaker. The output signals from pin 13 pass through the mute switch (Q141, RL140), and are then applied to the internal speaker jack (J142, pin 1) via the MAIN speaker phone jack (J140).

**• SUB SPEAKER OUTPUT**

The AF signals from the DSP-A and DSP-B boards are applied to the AF switch (MAIN unit: IC101, pin 6 for DSP-A, pin 7 for DSP-B), and pass through the SQL switch (Q101) which is controlled by “SQLS” signal. The signals are applied to the buffer amplifier (IC102, pin 5), and are then amplified at the VCA (Voltage Control Amplifier) circuit (IC105, pin 1). The amplified signals from VCA circuit from pin 4 are applied to the AF power amplifier (IC140, pin 2) to obtain the suitable driving level for speaker. The output signals from pin 12 pass through the mute switch (Q141, RL140), and are then applied to the SUB speaker jack (J141).

**• AF AMPLIFIER CIRCUIT**

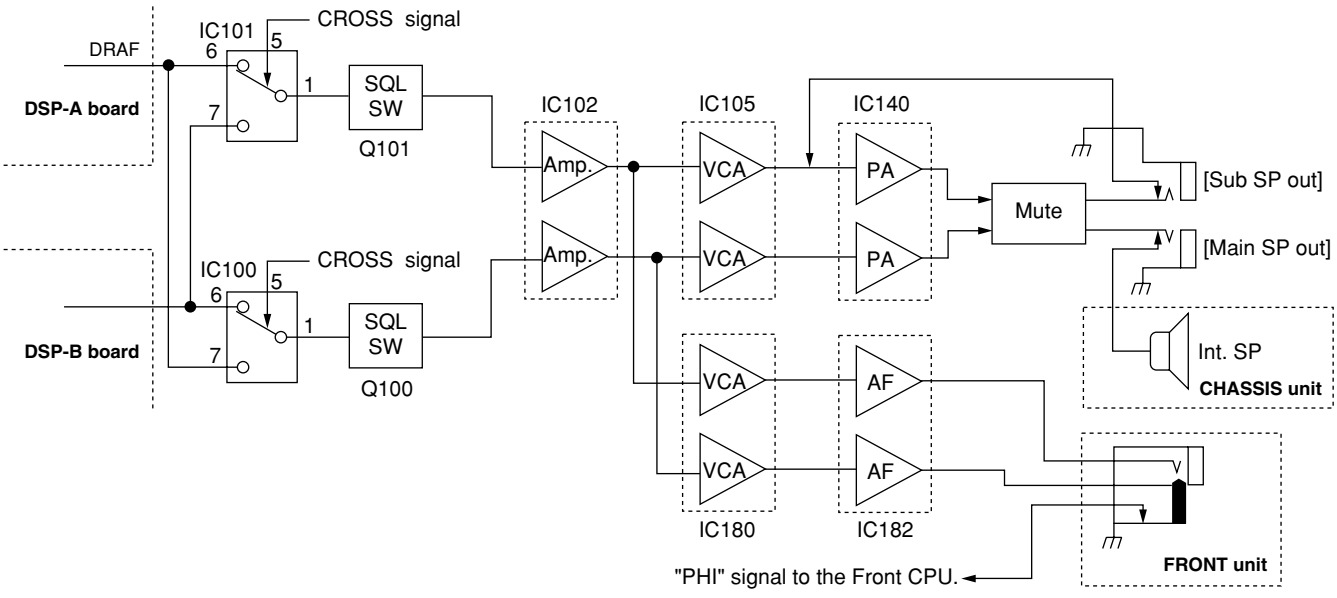

### 3-1-9 AGC CIRCUIT (RXPLL-A AND RXPLL-B UNITS AND DSP-A AND DSP-B BOARDS)

The AGC (Automatic Gain Control) circuit reduces IF amplifier gain and attenuates IF signal to keep the audio output at a constant level.

**• RX-A CIRCUIT (RXPLL-A UNIT AND DSP-A BOARD)**

A part of signals from the compositor circuit (RXPLL-A unit; IC1505, pin 8) are applied to the AGC detector circuit (IC1652, D1653), and are then amplified at the AGC amplifier (RXPLL-A unit; IC1653, pin 3). The amplified signals are applied to the DSP-A board via the J921, pin 1 on the DSP-A board as "AGCDET_A" line.

The amplified signals are applied to the amplifier (DSP-A board; IC501, pin 2), and are then applied to the A/D converter (DSP-A board; IC401, pin 25). The converted digital signals are applied to the DSP IC (DSP-A board; IC1), and then applied to the D/A converter (DSP-A board; IC771). The converted analog signals are amplified at the AGC amplifier (DSP-A board; IC501, pin 5), and are then applied to the MAIN unit via the J921, pin 6 as "AGCOUT_A" line.

The amplified signals are applied to the RXPLL-A unit via the J1701, pin 9 as "DAGC" line after being passed through the J400, pin 8 on MAIN unit as "AGC1A" line. The applied signals are amplified at the AGC amplifier (RXPLL_A unit; IC1653, pin 5), and are then applied to the IF amplifier (RXPLL-A unit; Q1403) as AGC signal.

**• RX-B CIRCUIT (RXPLL-B UNIT AND DSP-B BOARD)**

A part of signals from the compositor circuit (RXPLL-B unit; IC1505, pin 8) are applied to the AGC detector circuit (IC1652, D1653), and are then amplified at the AGC amplifier (RXPLL-B unit; IC1653, pin 3). The amplified signals are applied to the DSP-B board via the J921, pin 1 on the DSP-B board as "AGCDET_B" line.

The amplified signals are applied to the amplifier (DSP-B board; IC501, pin 2), and are then applied to the A/D converter (DSP-B board; IC401, pin 25). The converted digital signals are applied to the DSP IC (DSP-B board; IC1), and then applied to the D/A converter (DSP-B board; IC771). The converted analog signals are amplified at the AGC amplifier (DSP-B board; IC501, pin 5), and are then applied to the MAIN unit via the J921, pin 6 as "AGCOUT_B" line.

The amplified signals are applied to the RXPLL-B unit via the J1701, pin 9 as "DAGC" line after being passed through the J400, pin 8 on MAIN unit as "AGC1B" line. The applied signals are amplified at the AGC amplifier (RXPLL_B unit; IC1653, pin 5), and are then applied to the IF amplifier (RXPLL-B unit; Q1403) as AGC signal.

## 3-2 TRANSMITTER CIRCUITS

### 3-2-1 MICROPHONE AMPLIFIER CIRCUIT (MAIN UNIT)

The microphone amplifier circuit amplifies microphone audio signals to a level needed for the DSP circuit.

Audio signals from [MIC] connector (MIC board; J1, pin 1) are amplified at the audio amplifier section in IC821 (pin 2), then applied to the VCA section. The gain controlled signals are output from (IC821, pin 4) and passed through the analog switch (IC201, pins 1, 7). The signals pass through the analog switch (IC460, pins 1, 6), and are then applied to the DSP circuit after being passed through the limiter amplifier (IC230, pins 1, 3) as the "AFIN" signal.

The VCA section in IC821 controls microphone input gain according to [MIC GAIN] control level using the MIGV signal coming from the main CPU via the I/O expander (IC330, pin 2).

### 3-2-2 DSP TRANSMITTER CIRCUIT (DSP-TX BOARD)

The DSP (Digital Signal Processor) circuit enables digital IF filter, digital noise reduction, digital PSN (Phase Shift Network)/Low Power/Phase demodulation, digital automatic notch, and etc.

The AF signals from the limiter amplifier (MAIN unit; IC230, pin 1) are then applied to the buffer amplifiers (IC301; pins 2, 6, IC341, pins 2, 6, IC371, pins 2, 6) to convert to balancing signal. The signals are applied to the A/D convertor (IC401, pins 4, 5).

The converted digital signals are applied to the DSP IC (IC1) to do filtering, modulate and so on. The modulated signals are applied to the D/A converter (IC551) to convert into a 36 kHz IF signal.

**• DSP TRANSMITTER CIRCUIT**

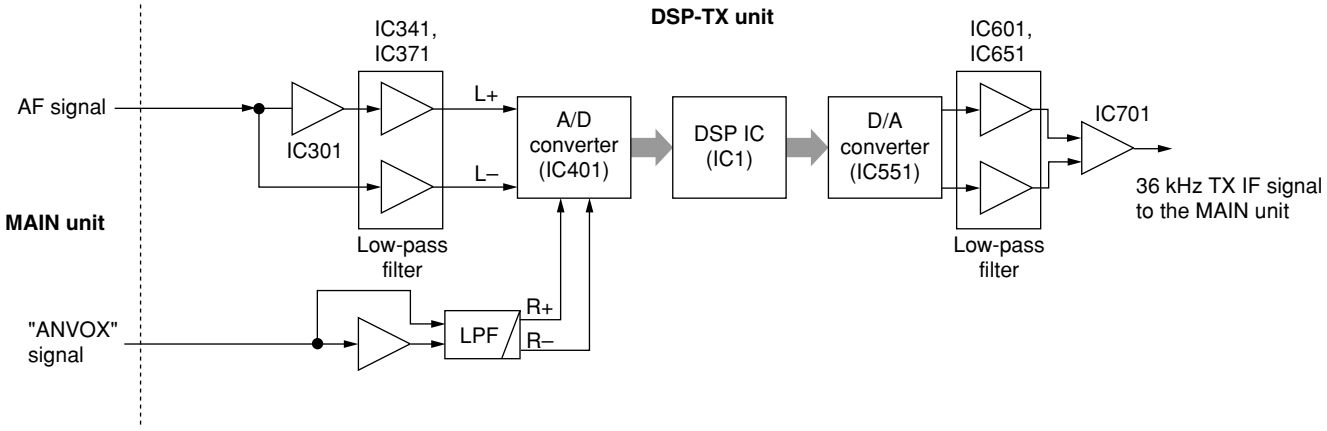

The converted analog IF signal passes through the low-pass filter (IC601, pins 3, 6, IC651, pins 3, 6), and is then applied to the IF amplifier (IC701, pins 2, 3) to convert to unbalancing IF signal.

The 36 kHz IF signal from the IF amplifier (pin 6) is applied to the 3rd mixer circuit.

### 3-2-3 3RD MIXER CIRCUIT (MAIN UNIT)

The modulated 36 kHz IF signal from the DSP-TX board pass through the two low-pass filters (IC501, pins 3, 6, IC502, pins 3, 6), and is then applied to the 3rd mixer circuit (IC503, pin 3). The 36 kHz IF signal is mixed with 491 kHz 3rd LO signal (from RXPLL-A unit) to produce the 455 kHz 3rd IF signal.
The signal is amplified at the IF amplifier (Q501), and passes through the one of the ceramic bandpass filters (FI501; 20 kHz, FI502; 4 kHz). The filtered signal is amplified at the other IF amplifier (Q504), and is then applied to the 2nd mixer circuit via the attenuator (R545–R547).

### 3-2-4 2ND MIXER CIRCUIT (MAIN UNIT)

The 3rd IF signal from the 3rd mixer circuit is applied to the 2nd mixer circuit (D505). The applied 3rd IF signal is mixed with 64 MHz 2nd LO signal (from the RXPLL-A unit) to produce the 64.455 MHz 2nd IF signal.
The signal passes through the bandpass filter (FI503; Fc=64.455 MHz) to suppress unwanted signals, and is then applied to the IF amplifier (Q506). The 2nd IF signal is applied to the 1st mixer circuit.

### 3-2-5 1ST MIXER AND RF CIRCUITS (MAIN UNIT)

The 2nd IF signal from the 2nd mixer circuit is applied to the 1st mixer circuit (D506). The 1st IF signal is mixed with 1st LO signal (from the RXPLL-A unit) to produce the RF signal. The RF signal passes through the low-pass filter (L518, L519, C564–C568) and 3 dB attenuator (R578–R580). The signal is then applied to the RF amplifier and bandpass filter circuits.

### 3-2-6 RF AMPLIFIER AND BANDPASS FILTER CIRCUITS (MAIN UNIT)

The RF signal is amplified at the RF amplifier (Q508), and applied to the one of the 10 bandpass filters via the 5 dB attenuator (R575–R577).

The filtered signal is applied to the YGR amplifier (Q801), and passes through the 3 dB attenuator (R805–R807). The signal is applied to the power amplifier circuit via the J801.

### 3-2-7 POWER AMPLIFIER CIRCUIT (PA200W BOARD)

The signal from the attenuator (MAIN unit; R805–R807) passes through the 3 dB attenuator (R101–R103) via the J1, and is then amplified at the RF amplifier (Q101). The signal is applied to the pre-drive (Q201) and drive amplifier (Q301), and is then amplified at the power amplifier (Q401, Q402) to obtain 200 W output power.

The output signal is applied to the FILTER circuit via the J401.

### 3-2-8 FILTER CIRCUIT (FILTER UNIT)

The power amplified signal passes through the one of the 9 low-pass filters which is depended on the RF frequencies to suppress the unwanted frequency components. The filtered signal is applied to the CONTROL circuit via the J904.

### 3-2-9 CONTROL CIRCUIT (CTRL BOARD)

The filtered signal from the FILTER unit is applied to the SWR-DET circuit (D101, D102) to detect SWR level, and then passes through the P-DET (D151, D152) and R-DET circuit (D201, D202). The signal is applied to the T/R switch (RL251), and is then applied to (or bypass) the antenna tuner circuit (NETWORK board) via the antenna tuner selector switch (RL252, RL253).

The tuned signal from J252 (or bypass signal) passes through the CRNT DET circuit (D301, D302) to detect the driving current, and is then applied to the antenna switching circuit.

The detected signal at CRNT DET circuit is amplified at the amplifier (IC301, pin 3), and is then applied to the TUNER_CPU (IC1, pin 16).

### 3-2-10 ANTENNA SWITCHING CIRCUIT (ANT-SW UNIT)

The signal from the CTRL board is applied to the ANT-SW unit via the J1, and is applied to the one of the 4 relays (RL51, RL61, RL71, RL81). The signal is output from the one of the 4 antenna connectors, J51, J61, J71 or J81.

**• TRANSMITTER CONSTRUCTION**

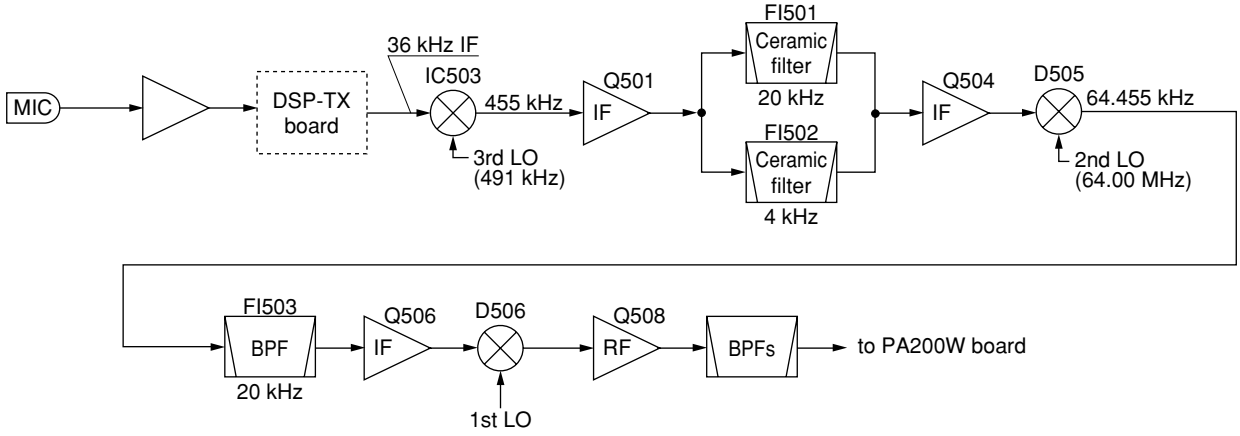

The antenna switching relays are controlled by the RL-CTRL CPU (IC11, pins 6, 9, 12, 15) as the “ANT1A”, “ANT2A”, “ANT3A” and “ANT4A” signals respectively.

### 3-2-11 ALC CIRCUIT (CTRL BOARD, LOGIC AND MAIN UNITS)

The ALC (Automatic Level Control) circuit controls the gain of IF amplifiers in order for the IC-7800 to output a constant RF power set by [RF PWR] control even when the supplied voltage shifts, etc.

The RF power level is detected at one of the SWR detector circuits (CTRL board; D102) to be converted into DC voltage and applied to the MAIN unit as the FORV signal via the LOGIC unit.

The FORV signal from the LOGIC unit is applied to the comparator (MAIN unit; IC60, pin 2). The POCV signal, controlled by [RF POWER] control via the I/O expander (MAIN unit; IC330, pin 4), is also applied to the other input (pin 3) for reference. The compared signal is output from pin 1 and applied to the IF amplifiers (MAIN unit; Q504, Q506) to control amplifying gain.

When the FORV signal exceeds the POCV voltage, ALC bias voltage from the comparator controls the IF amplifiers. This adjusts the output power to a specified level from [RF POWER] control until the FORV and POCV voltages are equalized.

In AM mode, the comparator operates as an averaging ALC amplifier. Q61 (MAIN unit) turns ON and shift the POCV voltage to adjust the TX output power for 50 W (maximum) through R82.

The ALC bias voltage is also applied to the ALC meter amplifier (MAIN unit; IC61, pin 9) to obtain an ALC meter signal (ALCL). The amplified signal is applied to the main CPU2 (LOGIC unit; IC604, pin 115) to drive the S/RF meter via the front CPU (IC6) on the DISPLAY board.

An external ALC input from [ALC] jack, [ACC1] or [ACC2] sockets is applied to the ALC amplifier (Q62). External ALC operation is identical to that of the internal ALC.

The FORV signal is also applied to the power meter amplifier (LOGIC unit; IC851, pin 5). The amplified signal is applied to the main CPU2 (LOGIC unit; IC604, pin 113) to drive the S/RF meter as an FORL signal when the power meter is selected.

### 3-2-12 APC CIRCUIT (MAIN UNIT, CTRL AND PA200W BOARDS)

The APC (Automatic Power Control) circuit protects the power amplifiers on the PA 200W board from high SWR and excessive current.

The reflected wave signal appears and increases when the connected antenna is mismatched to 50 Ω. The SWR detector (CTRL board; D101) detects the reflected signal, and applies it to the APC circuit (MAIN unit; IC60, pin 13) as a REFV signal via the LOGIC unit.

When the REFV signal level increases, the APC circuit decreases the ALC voltage to activate the APC.

For the current APC, the power transistor current is obtained by detecting the voltages (IDH and IDL) which appear at both terminals of the ID detector (PA200W board; R521–R523). The detected voltages are applied to the differential amplifier (IC60, pins 5, 6). When the current of transistors is increased, the amplifier controls the ALC line to prevent excessive current flow.

### 3-2-13 TEMPERATURE PROTECTION CIRCUIT (PA200W BOARD)

The cooling fan (CHASSIS; MF1) is activated while transmitting or when the temperature of the power amplifier exceeds the preset value. The temperature protection circuit consists of IC604, IC330, IC821, Q821, Q822 and R3.

While transmitting, IC821 and Q821 are turned ON, and provide a voltage to the cooling fan to rotate at medium speed. The thermistor (R3) detects the temperature of the power amplifiers (Q401, Q402). The detected signal is applied to the CPU (IC604, pin 118) to analyze the power amplifier’s temperature via “THML” signal. The signal is applied to the D/A converter (IC330), and is then applied to the FAN controller (IC821, pin 1, Q821, Q822) via “FANI” signal. The control signal outputs from the controller (IC821, pin 7) as “FANV” signal, and then controls cooling fan via the J824.

## 3-3 PLL CIRCUITS

### 3-3-1 GENERAL

The PLL circuits consist of OSC, RXPLL-A and RXPLL-B units.

The OSC unit oscillates 10 MHz reference frequency for RXPLL-A, RXPLL-B units and external reference frequency.

The RXPLL-A unit oscillates 6 LO frequencies for the RX-A unit’s receive 1st and 2nd LO frequencies, MAIN unit’s transmit 1st, 2nd and 3rd LO frequencies, marker frequency.

The RXPLL-B unit oscillates 6 LO frequencies for the RX-B unit’s receive 1st and 2nd LO frequencies, SCOPE unit’s reference frequency, clock signal of DSP-TX, DSP-A and DSP-B board.

1st and 2nd LO frequency lists for RX, 3rd IF and LO frequency lists and 2nd IF and LO frequency list are shown at page 3-28.
1st IF and 1st LO frequency lists for TX are shown at page 3-29.

### 3-3-2 OSCILLATOR CIRCUIT (OSC UNIT)

The reference oscillator (IC91, X1) generates a 10 MHz frequency which field intensity is 0 dBm. The signal is used for the RXPLL-A and RXPLL-B unit’s system clock, etc.

**• IN CASE OF USING AS RXPLL-A AND RXPLL-B UNIT’S SYSTEM CLOCK**

The oscillated signal is amplified at the buffer amplifier (Q21), and is the applied to the amplifier (Q22). The amplified signal passes through the oscillated signal selector (RL11), and is then amplified at the buffer amplifier (Q70). The amplified signal is applied to the RXPLL-A and RXPLL-B units via the J72 and J73, respectively.

**• IN CASE OF USING REFERENCE SIGNAL TO EXTERNAL**

The oscillated signal is amplified at the buffer amplifier (Q21), and is then applied to the amplifier (Q42). The amplified signal is applied to the input-output switch (RL10) via the low-pass filter (L43, L44, C46–C51), and is then output from J71 after being passed through the 6 dB attenuator (R71–R73).

**• IN CASE OF USING REFERENCE SIGNAL FROM EXTERNAL**

The reference signal from the external equipment is applied to the J71, and is then applied to the input-output switch (RL10) via the 6 dB attenuator (R71–R73). The signal is applied to the amplifier (Q61, Q62), and passes through the bandpass filter (L61, L62, C66). The filtered signal is applied to the reference signal switch (RL11), and is then amplified at the buffer amplifier (Q70). The amplified signal is applied to the RXPLL-A and RXPLL-B units via the J72 and J73, respectively.

## 3-3-3 RXPLL-A CIRCUIT (RXPLL-A UNIT)

The 10 MHz oscillated signal from the OSC unit is applied to the amplifier (Q30) via the J10, and is then amplified at the quadrupler (Q702) to produce 40 MHz reference signal. The amplified signal passes through the bandpass filter (L702, L703, C709–C713), and is then applied to the 1st LO, maker, 2nd LO and 3rd LO circuits, respectively.

**• 1ST LO CIRCUIT**

The 40 MHz reference signal is applied to the amplifier (Q104) via the "40M" line, and is then applied to the DDS IC (IC101, pin 88) as the system clock signal. The output signals from pins 7–20 pass through the D/A convertor (R110–R133). The converted signal passes through the ceramic filter (FI101) to pass the 10.5 MHz signal, and is then applied to the amplifier (IC102, pin 2). The amplified signal is applied to the DDS IC (IC101, pin 47) again, and is then applied to the phase detector section of the DDS IC. The signal which outputs from the DDS IC (IC101, pin 56) passes through the loop filter (L151, C152–C155), and is then applied to the oscillator circuit (Q150). The circuit oscillates 10.4122038–10.4963312 MHz signal.
The oscillated signal is applied to the amplifier (Q151), and is then applied to the PLL IC (IC201).

A part of the oscillated signal is fed back to the DDS IC (IC101, pin 46) via the amplifier (Q152) as the comparison signal.

The amplified signal from Q151 is applied to the PLL IC's 1/21 divider section (IC201, pin 8), and is then applied to the PLL section. The signal outputs from pin 2, and passes through the loop filter (L211, C221, C222). The filtered signal is applied to the one of the 6 VCOs as follow.

**RXPLL-A 1ST LO VCO TABLE**

| VCO No. | Parts No. | Oscillating frequencies |
|---|---|---|
| 1 | Q220 | 64.485–72.454999 MHz |
| 2 | Q230 | 72.455–79.454999 MHz |
| 3 | Q240 | 79.455–86.454999 MHz |
| 4 | Q250 | 86.455–94.454999 MHz |
| 5 | Q260 | 94.455–109.454999 MHz |
| 6 | Q270 | 109.455–124.455 MHz |

The oscillated signal is amplified at the buffer amplifier (Q301), and passes through the high-pass (L331, C331–C333) and low-pass (D341, L332, C334–C337) filters. The filtered signal is applied to the amplifier (Q302).

A portion of buffer amplified signal from Q301 is fed back to the PLL IC's 1/N (N=130–250) divider section (IC201, pin 6) via the buffer amplifier (Q303).

The amplified signal from Q302 is applied to another amplifier (Q351), and is then amplified at the buffer amplifier (Q352). The signal passes through the low-pass (D441, L441, L442, C442–C446) and high-pass (L451, C447, C451, C452) filters and attenuator (R364–R366), and is then output from J351/J421 as the RX 1st LO signal (64.485–124.455 MHz)/TX 1st LO signal (64.485–124.455 MHz) to the TX/RX-A circuits respectively via the LO switches (D421, D422).

**• MARKER CIRCUIT**

The 40 MHz reference signal is applied to the amplifier (Q104) via the "40M" line, and is then applied to the DDS IC (IC101, pin 88) as the system clock signal.
The signal passes through the DDS IC's 1/400 divider section, and outputs from the IC (pin 49). The signal is applied to the marker switch (IC602, pin 1), and is then output from the IC (pin 4) as the 100 kHz marker signal.

**• 2ND LO CIRCUIT**

The 40 MHz reference signal is applied to the amplifier (IC503) via the "40M" line, and is then applied to the DDS IC (IC501, pin 88) as the system clock signal. The signals which are output from pins 6–20 are applied to the D/A convertor (R510–R533), and then passes through the low-pass filter (L530–L532, C531–C536) to suppress more than 4.5 MHz signals. The filtered signal (4.0–4.0306875 MHz) is applied to the amplifier (IC502, pin 2), and is then applied to the DDS IC's phase detector section (IC501, pin 47). The output signal from pin 56 passes through the loop filter (D542, L541, C543, C543–C547, R548, R554), and is then applied to the oscillator circuit (Q541) to oscillate the 64 MHz reference signal.

The 64 MHz signal is applied to the buffer amplifier (Q561) and the hybrid divider and then applied to the TX or RX 2nd LO circuits.

A portion of 64 MHz signal passes through the attenuator (R571, R572), and is then applied to the amplifier (Q580). The amplified signal is applied to the DDS IC's quarter detector section (IC501, pin 80) as the comparison signal.

**(1) TX 2ND LO CIRCUIT**

The signal from the hybrid divider passes through the attenuator (R587–R589), and is then applied the amplifier (Q591). The signal passes through the bandpass filter (L565, L566, C573–C575) to suppress unwanted signals, and is then applied to the TX 2nd mixer circuit (RX-A unit; D505) via the J561.

**(2) RX 2ND LO CIRCUIT**
The signal from the hybrid divider passes through the attenuator (R802, R803), and is then applied to the amplifier (Q801). The signal passes through the attenuator (R805–R807), and is then applied to the mixer circuit (D821) to mix with TX 3rd LO signal. The mixed signal passes through the attenuator (R831–R833) and bandpass filter (FI831), and is then applied to the amplifier (Q831). The signal passes through the attenuator (R836–R838), and is then applied to the LO (Q1651) and buffer (IC1651, pins 9, 10) amplifiers. The amplified signal is applied to the buffer amplifier (IC1651, pins 1, 2), and is then applied to the 2nd mixer circuit (IC1501, pin 1) as 2nd LO signal.

A part of amplified signal from buffer amplifier (IC1651, pin 8) passes through the 90 degrees phase inversion circuit (L1652, C1655 and C1656), and is then amplified at the buffer amplifier (IC1651, pins 4, 5). The amplified signal is applied to the 2nd mixer circuit (IC1502, pin 1) as 2nd LO signal.

**• TX 3RD LO CIRCUIT**
The 40 MHz reference signal is applied to the amplifier (Q652) via the "40M" line, and is then applied to the DDS IC (IC651, pin 7) as the system clock signal. The signals which are output from pins 13–22 are applied to the D/A convertor (R661–R671, R673–R681), and then passes through the low-pass filter (L681, L682, C680–C685) to suppress more than 0.5 MHz signals. The signal is amplified at the buffer amplifier (Q680), and passes through the attenuator (R690–R692). The signal is applied to the TX 3rd mixer circuit (MAIN unit; IC503, pin 1) via the J681.

## 3-3-4 RXPLL-B CIRCUIT (RXPLL-B UNIT)
The 10 MHz oscillated signal from the OSC unit is applied to the amplifier (Q30) via the J10, and is then amplified at the quadrupler (Q702) to produce 40 MHz reference signal. The amplified signal passes through the attenuator (R708–R710), and is then applied to the 1st LO, 2nd LO, DSP system clock and scope unit system clock circuits, respectively.

**• 1ST LO CIRCUIT**
The 40 MHz reference signal is applied to the amplifier (Q104) via the "40M" line, and is then applied to the DDS IC (IC101, pin 88) as the system clock signal. The output signals from pins 7–20 pass through the D/A convertor (R110–R133). The converted signal passes through the ceramic filter (FI101) to pass the 10.7 MHz signal, and is then applied to the amplifier (IC102, pin 2). The amplified signal is applied to the DDS IC (IC101, pin 47) again, and is then applied to the phase detector section of the DDS IC. The signal which outputs from the DDS IC (IC101, pin 56) passes through the loop filter (D152–D154, L151, C152–C155), and is then applied to the oscillator circuit (Q150). The circuit oscillates 10.5813219–10.7408384 MHz signal.
The oscillated signal is applied to the amplifier (Q151), and is then applied to the PLL IC (IC201).

A part of the oscillated signal is fed back to the DDS IC (IC101, pin 46) via the amplifier (Q152) as the comparison signal.

The amplified signal from Q151 is applied to the PLL IC's 1/21 divider section (IC201, pin 8), and is then applied to the PLL section. The signal outputs from pin 2, and passes through the loop filter (L221, C221, C222). The filtered signal is applied to the one of the 6 VCOs circuits as follow.

**RXPLL-B 1ST LO VCO TABLE**

| VCO No. | Parts No. | Oscillating frequencies |
|---|---|---|
| 1 | Q220 | 64.585–72.554999 MHz |
| 2 | Q230 | 72.555–79.554999 MHz |
| 3 | Q240 | 79.555–86.554999 MHz |
| 4 | Q250 | 86.555–94.554999 MHz |
| 5 | Q260 | 94.555–109.554999 MHz |
| 6 | Q270 | 109.555–124.555 MHz |

The oscillated signal is amplified at the buffer amplifier (Q301), and passes through the high-pass (L331, C331–C333) and low-pass (D341, L332, C334–C337) filters. The signal is applied to the amplifier (Q302).

A portion of buffer amplified signal from Q301 is fed back to the PLL IC's 1/N (N=130–250) divider section (IC201, pin 6) as the comparison signal via the buffer amplifier (Q303).

The amplified signal from Q302 is applied to another amplifier (Q351), and is then amplified at the buffer amplifier (Q352). The signal passes through the low-pass filter (D441, L441, L442, C441–C446) and attenuator (R364–R366), and is then output from J351 as the RX 1st LO signal (64.585–124.555 MHz) to the RX-B circuit.

**• 2ND LO CIRCUIT**
The 40 MHz reference signal is applied to the amplifier (Q503) via the "40M" line, and is then applied to the DDS IC (IC501, pin 88) as the system clock signal. The signals which are output from pins 6–20 are applied to the D/A convertor (R510–R533), and then passes through the low-pass filter (L530–L532, C531–C536) to suppress more than 4.5 MHz signals. The filtered signal (4.0–4.0369735 MHz) is applied to the amplifier (IC502, pin 2), and is then applied to the DDS IC's phase detector section (IC501, pin 47). The output signal from pin 56 passes through the loop filter (D542, L541, C543, C543–C547, R548, R554), and is then applied to the oscillator circuit (Q541) to oscillate the 64.591 MHz reference signal.

The 64.591 MHz signal is amplified at the buffer amplifier (Q561), and is then applied to the hybrid divider.

A portion of 64.591 MHz signal passes through the attenuator (R571, R572), and is then applied to the amplifier (Q580). The amplified signal is applied to the DDS IC's quarter detector section (IC501, pin 80) as the comparison signal.

The 64.591 MHz signal from the hybrid divider passes through the attenuator (R587–R589), and is then applied to the amplifier (Q591). The amplified signal passes through the bandpass filter to suppress unwanted signals, and is then applied to the RX 2nd mixer circuit (IC1501, IC1502) as 2nd LO signal via the J561.

## • DSP SYSTEM CLOCK CIRCUIT

The 40 MHz reference signal is applied to the amplifier (IC652) via the "40M" line, and is then applied to the DDS IC (IC651, pin 7) as the system clock signal. The signals which are output from pins 14–22 are applied to the D/A convertor (R661–R671, R673–R681), and then passes through the low-pass (L681, L682, C680–C685) and high-pass (L683, C686–C688) filters to suppress unwanted signals. The filtered signal is amplified at the buffer amplifier (Q680), and passes through the attenuator (R690–R692). The signal is applied to the DSP IC for TX (DSP-TX board; IC1), RX-A (DSP-A board; IC1) and RX-B (DSP-B board; IC1) as 12.288 MHz system clock signal via the A/D converters.

## • RXPLL-A/B CIRCUITS

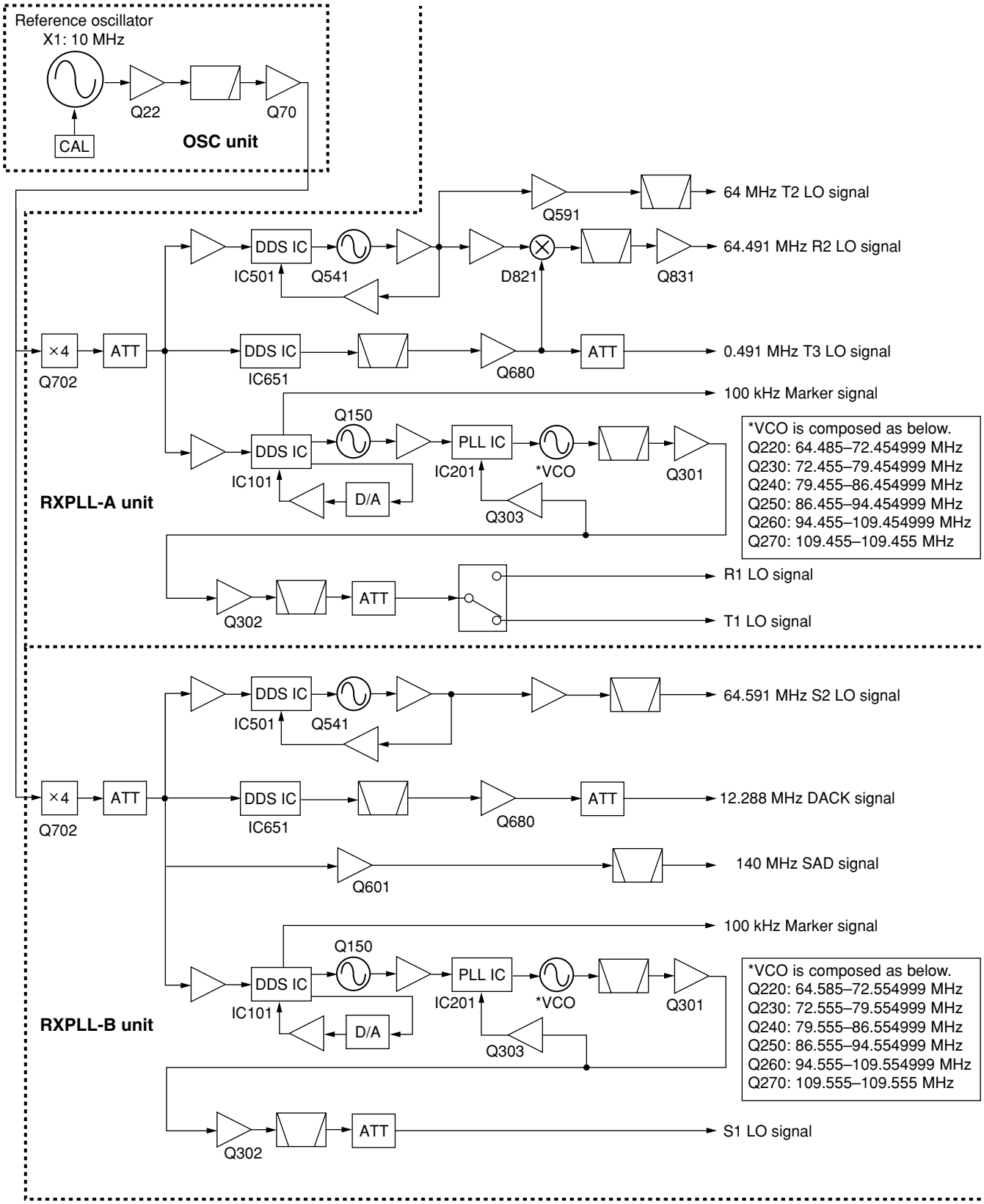

**• SCOPE UNIT SYSTEM CLOCK CIRCUIT**
The 40 MHz reference signal is amplified at the buffer amplifier (Q601) via the “40M” line, and then passes through the low-pass filter (L602, L603, C609–C613). The filtered signal is applied to the buffer amplifier (SCOPE unit; Q701) as the 40 MHz system clock via the J601.

## 3-4 ANTENNA TUNER CIRCUITS

### 3-4-1 MATCHING CIRCUIT (NETWORK BOARD)

The matching circuit is a T-network. Using 2 tuning motors, the matching circuit obtains rapid overall tuning speed.

Using relays (RL50, RL60, RL70, RL80, RL90, RL100, RL110, RL120), the relay control signals from the antenna tuner CPU (CTRL board; IC1) via the buffer amplifier (IC402) ground one of the taps of L50, L60, L70, L80, L90, L100, L110, L120. After selecting the coils, 2 motors (TUNER unit; MF1, MF2) adjust C1 and C2 using the antenna tuner CPU (CTRL board; IC1) and the motor controller (CTRL board; Q3–Q10, D3–D6) to obtain a low SWR (Standing Wave Ratio).

### 3-4-2 DETECTOR CIRCUIT (CTRL BOARD)

**(1) SWR DETECTOR**
Forward and reflected power are picked up by a current transformer (L101), detected by D101 and D102, and then amplified at IC101, pin 3 and pin 5, respectively. The amplified voltages are applied to the antenna tuner CPU (IC1, pins 2, 3) via “AN0” and “AN1” lines. The tuner CPU detects the SWR.

**(2) REACTANCE COMPONENTS DETECTOR**
Reactance components are picked up by comparing the phases of the RF current and RF voltage. The RF current is detected by L151 and R151–R154 and buffer-amplified at IC151, pin 13 and IC154, pin 1 and then applied to the phase comparator (IC156, pin 1). RF voltages are detected by C151–C153, C158 and then applied to the phase comparator (IC156, pin 13) after being amplified at the buffer amplifiers (IC151, IC153). The output signal from the phase comparator (IC156, pin 6 for RF current, IC156 pin 7 for RF voltage) is rectified at D154 and D153 for conversion into DC voltage. The rectified voltage signals are combined, then amplified at the differential amplifier (IC201, pin 2), then applied to the antenna tuner CPU (IC1, pin 64) via the “AN3” line.
A C-MOS IC is used for the buffer amplifier (IC151) to improve functionable sensitivity; the differential amplifier (IC201) is very responsive even with a low signal level input. Together, these ensure quick and stable signal detection even at low RF signal level input.

**(3) RESISTANCE COMPONENTS DETECTOR**
Resistance components are picked up by L201, and detected by D201, D202 and Q201. The detected resistance components are amplified at the differential amplifier (IC201, pin 6), and then applied to the antenna tuner CPU (IC1, pin 1) via the “AN2” line.

### 3-4-3 MOTOR CONTROL CIRCUIT (CTRL BOARD AND TUNER UNIT)

The control circuit of the internal antenna tuner consists of the CPU, EEPROM (Electronically-Erasable Programmable Read Only Memory), tuning motors and tuning relays.

**(1) CPU AND EEPROM (CTRL BOARD)**
The antenna tuner CPU (IC1) controls the tuning motors via the motor controller (Q3–Q10, D3–D6) and tuning relays, and memorizes the best preset position in 100 kHz steps. The memory contents are stored in the EEPROM (IC2) without a backup battery.

**(2) TUNING MOTORS (CTRL BOARD)**
A motor controller (Q3–Q10 D3–D6) rotates the tuning motors (TUNER unit; MF1, MF2) to obtain a low SWR.

**(3) TUNING RELAYS (TUNER UNIT)**
According to the operating frequency band and antenna condition, tuning relays select the capacitors and coils.

### 3-4-4 ANTENNA TUNER CPU PORT ALLOCATION (CTRL BOARD; IC1)

| Pin number | Port name | Description |
|---|---|---|
| 1 | AN2 | Input port for the resistance components detection voltage. |
| 2 | AN1 | Input port for the reflected RF power voltage. |
| 13 | IKEY | Outputs tuner data signal. |
| 15 | IKEYB | Input port for the serial signal. |
| 17 | THRU | Input port for [TUNER] ON/OFF signal. |
| 21 | TRC | Input port for the TX/RX switching signal. |
| 22, 23 | #CL1, CL2 | Input port for the antenna tunner CPU system clock. |
| 26 | VHF | Outputs the coil selection signal.<br>High : While 46–60 MHz band is displayed. |
| 27–32 | L24M, L18M, L14M, L10M, L7M, L3.5M | Output the coil selection signal. |
| 34–40 | CO3, CO2, CO1, CI3, CI2, CI1 | Output the capacitor selection signal. |
| 41–48 | AZ, AY, AX, AW, PZ, PY, PX, PW | Output pulse-type control signals for the tuning motors (MF1, MF2). |
| 64 | AN3 | Input port for the reactance components detection voltage. |

# 3-5 SCOPE CIRCUITS

## 3-5-1 SCOPE RECEIVER CIRCUIT (SCOPE UNIT)

A portion of the 64.455 MHz 1st IF signal from the 1st mixer circuit (RXPLL-A/B units; IC1051, Q1211, Q1212: while receiving) or IF amplifier (MAIN unit; Q506: while transmitting) passes through the switches (IC1, IC31). The switched signal is passed through the PIN attenuator (D1, D2), low-pass filter (L13, L14, C42–C46) and bandpass filter (L5, L6, C11–C13, C41) and then amplified at the IF amplifiers (Q2). The amplified signal is mixed with the 18.455–20.455 MHz scope 2nd LO (S2LO) signal at the mixer circuit (D101) to produce the 45 MHz IF signal. The mixed IF signal is passed through the ceramic bandpass filter (FI201) to suppress unwanted signals. The filtered IF signal is applied to other mixer (D4) after amplifying at 2 amplifiers (Q201, Q202). The signal is applied to the amplifier (IC401, pin 6), and then passes through the low-pass filter (IC403, pins 1, 6). The filtered signal is amplified at the amplifier (IC404, pin 6), and is then applied to the DSP IC (IC601) via the A/D converter (IC501, pin 43). The DSP IC analyzes digital signals, and then outputs digital data to the CPU.

## 3-5-2 SCOPE UNIT AGC CIRCUIT (SCOPE UNIT)

A pert of the filtered signal at the low-pass filter (IC403, pin 1) is applied to the amplifier (IC404, pin 6). The amplified signal is applied to the AGC detector (D401, D402), and is then applied to the AGC amplifier (IC405, pin 2). The amplified signal is applied to the comparator section to compare with “ATTV” signal. The signal is amplified at the AGC amplifier (Q1), and is then applied to the PIN attenuator (D1, D2) to keep same gain.

## 3-5-3 SWEEP LO CIRCUIT (SCOPE UNIT)

The 40 MHz signal is applied to the J3 from the RXPLL-B unit. The signal is used for reference system clock of each circuits.

### (1) S2 LO CIRCUIT

The 40 MHz reference system clock is amplified at the amplifiers (Q701 and Q720). The amplified signal is applied to the 14 bits DDS IC (IC820, pin 62). The DDS IC which is controlled by the CPU outputs 19.555 MHz (for MAIN RX) or 19.555±0.5 MHz (for SUB RX) system clock from pin 45, and then passes through the low-pass filter (L761–L763, C761–C767), high-pass filter (L764, C768–C770) and attenuator (R764–R766). The attenuated signal is applied to the LO amplifier (Q101), and then passes through the low-pass filter (L104, C108–C110) and attenuator (R105–R107). The attenuated signal is applied to the mixer circuit (D101) as S2 LO signal (19.555–20.455 MHz).

### (2) S3 LO CIRCUIT

The 40 MHz reference system clock is amplified at the amplifiers (Q701, Q810). The amplified signal is applied to the PLL IC (IC801, pin 8). The applied signal passes through the 1/400 divider and phase detector circuits of the IC, and is then applied to the VCO circuit (Q821) via the loop filter to produce 44.8 MHz signal. The 44.8 MHz signal is amplified at the buffer amplifiers (Q841–Q843), and then passes through the low-pass filter (L851, L852, C852–C856) to suppress high-harmonics components. The filtered signal passes through the attenuator (R856–R858), and is then amplified at the amplifier (Q301). The signal passes through the other attenuator (R302–R304), and is then applied to the mixer circuit (D4) as S3 LO signal.

**• SCOPE CIRCUIT**

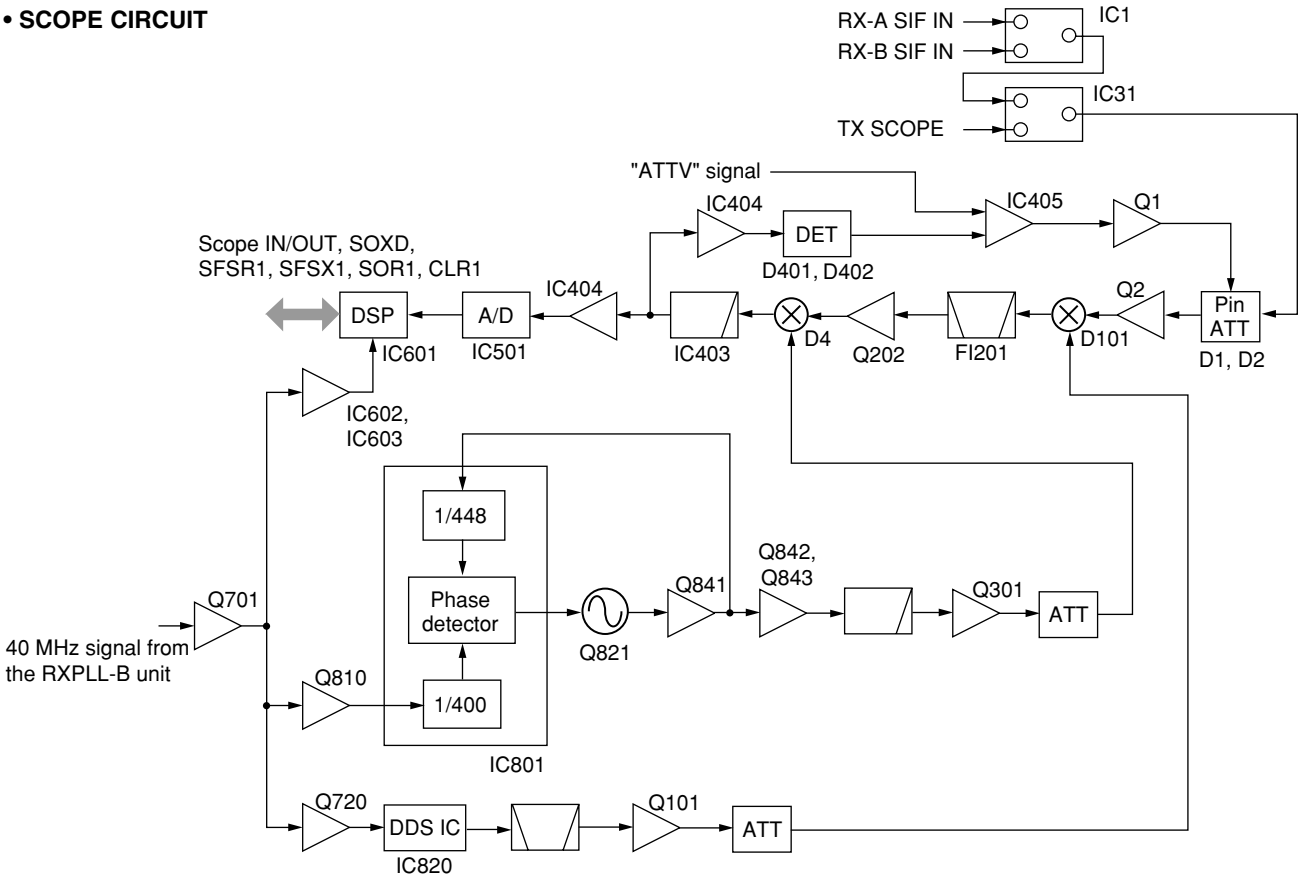

**(3) DDS LO CIRCUIT**

The 40 MHz reference system clock is amplified at the amplifiers (Q701, IC602, IC603), and is then applied to the DSP IC (IC601). The applied signal is quintupled in the IC, then uses 200 MHz DSP system clock signal.

The 200 MHz clock signal is divided 1/400, and then uses as the 500 kHz sampling frequency of the A/D converter (IC501).

## 3-6 POWER SUPPLY CIRCUITS

### 3-6-1 VOLTAGE LINES (DC-DC UNIT)

| LINE | DESCRIPTION |
|---|---|
| C15V | Common 15 V line from the REG unit. The voltage is applied to the LOGIC unit via the J3, pin 6. |
| H8V | Common 8 V from the REG unit. The signal is applied to the regulator circuits on the DC-DC unit. |
| +15V | The same voltage as the +15 line passed through the switching relay (RL142). The voltage is applied to the PA200W board (via J420, pins 1 and 2), LOGIC (via the J820, pins 4–6) and MAIN (via the J450, pin 3) units. |
| –12V | Common –12 V converted from the +15 V line and regulated by the –12V regulator circuit (IC121). The voltage is applied to the LOGIC (via the J820, pin 3) and MAIN (via the J450, pin 2) units. |
| VDD1R5 | Common 5 V converted from the H8V line and regulated by the VDD1R5 regulator circuit (IC101). The voltage is applied to the LOGIC unit via the J821, pin 2. |
| 5V | Common 5 V converted from the H8V line and regulated by the VDD5 regulator circuit (IC81). The voltage is applied to the LOGIC (via the J821, pin 4) and MAIN (via the J450, pin 10) units. |
| +8V | The same voltage as the H8V line passed through the switching relay (RL142). The voltage is applied to LOGIC (via the J820, pin 7) and MAIN (via the J450, pin 4) units. |
| +5V | Common 5 V converted from the +8V line and regulated by the +5V regulator circuit (IC61). The voltage is applied to the LOGIC (via the J820, pin 8) and MAIN (via the J450, pin 4) units. |
| +3R3V | Common 3 V converted from the +8V line and regulated by the +3R3V regulator circuit (IC41). The voltage is applied to the LOGIC (via the J820, pin 9) and MAIN (via the J450, pins 6–8) units. |
| VDD3R3 | Common 3 V converted from the H8V line and regulated by the VDD3R3 regulator circuit (IC21). The voltage is applied to the LOGIC unit via the J821, pin 3. |

# 3-7 PORT ALLOCATIONS

## 3-7-1 MAIN CPU2 PORT ALLOCATIONS (LOGIC UNIT; IC604)

| Pin number | Port name | Description |
|---|---|---|
| 5–9<br>11–17<br>19, 20 | H8_A0–A4<br>H8_A5–A11<br>H8–A12, A13 | Output address bus signals. |
| 21 | UNLKA | Input port for the PLL unlock signal from the RXPLL-A unit. |
| 22 | UNLKB | Input port for the PLL unlock signal from the RXPLL-B unit. |
| 23 | ECK | Outputs clock signal to the EEPROM. |
| 24 | EDT | I/O port for the data signal from/to the EEPROM. |
| 26 | DSCLA | Outputs clock signal to the EEPROM on the DIGISEL-A unit. |
| 27 | DSDAA | I/O port for the data signal from/to the EEPROM on the DIGISEL-A unit. |
| 28 | DSCLB | Outputs clock signal to the EEPROM on the DIGISEL-B unit. |
| 29 | DSDAB | I/O port for the data signal from/to the EEPROM on the DIGISEL-B unit. |
| 30 | RTKI | Input port for the RTTY keying signal. |
| 31 | TRVI | Input port for the transverter control signal from ACC jack on the rear panel. |
| 33 | SDAT | Outputs data signals to the DDS, PLL and DSP ICs on the SCOPE unit. |
| 34 | SST2 | Outputs strobe signal to the PLL IC on the SCOPE unit. |
| 35 | EXRL1 | Outputs external SEND relay (lead type) control signal.<br>High : The relay switches ON. |
| 36 | EXRL2 | Outputs external SEND relay (semiconductor type) control signal.<br>High : The relay switches ON. |
| 42 | PCK/CON0 | Outputs clock signal to the RXPLL-A/B ICs . |
| 43 | PDAT/CON1 | Outputs data signal to the RXPLL-A/B ICs. |
| 46 | PSLA | Outputs strobe select signal to the PLL-A IC. |
| 47 | PSTA | Outputs strobe signal to the RXPLL-A IC. |
| 48 | PSLB | Outputs strobe select signal to the PLL-B IC. |
| 49 | PSTB | Outputs strobe signal to the RXPLL-B IC. |
| 51 | MCK | Outputs clock signal to the ICs (other than PLL, scope and DSP ICs). |
| 52 | DAT | Outputs data signal to the ICs (other than PLL, scope and DSP ICs). |
| 54 | CTXD | Output port for the CI-V data. |
| 55 | CRXD/CBSY | Input port for the CI-V data and CI-V bus busy signals. |
| 56 | DSPCK | Outputs clock signal to the DSP IC. |
| 57 | DSPR | Outputs data signal to the DSP IC. |
| 58 | ISTA | Outputs start signal to the internal antenna tuner. |
| 59 | SST1 | Outputs chip select signal to the DDS IC on the SCOPE unit. |
| 60 | SPS0 | Outputs profile select signal to the DDS IC on the SCOPE unit. |
| 61 | SCK | Outputs clock signals to the DDS, PLL and DSP ICs on the SCOPE unit. |
| 63–69, 71, 73–80 | H8_D0–H8_D15 | I/O port for data bus signals. |
| 81 | MUTI | Input port for the external mute control signal.<br>High : Mute ON. |
| 82 | TXS | Outputs control signal to the TX circuit power supply.<br>Low : While transmitting. |
| 83 | NSQA | Input port for the noise pulse signal from the RX-A circuit. |
| 85 | TRAS | Outputs control signal for transmisson (other than PTT and the control signal from ACC). |
| 104 | NSQB | Input port for the noise pulse signal from the RX-B circuit. |
| 105 | RXSA | Outputs control signal to the RX-A circuit power supply.<br>Low : While the RX-A circuit is activated. |
| 106 | RXSB | Outputs control signal to the RX-B circuit power supply.<br>Low : While the RX-B circuit is activated. |
| 107 | SQSA | Outputs RX-A circuit squelch control signal to the ACC jack.<br>High : RX LED lights ON. |
| 108 | SQSB | Outputs RX-B circuit squelch control signal to the ACC jack.<br>High : RX LED lights ON. |
| 109 | SQLSM | Outputs AF mute control signal to the MAIN RX circuit.<br>Low : Squelch is open. |
| 110 | SQLSS | Outputs AF mute control signal to the SUB RX circuit.<br>Low : Squelch is open. |
| 113 | FORL | Input port for the “FOR” signal. |
| 114 | REFL | Input port for the “REF” signal. |
| 115 | ALCL | Input port for the ALC meter control signal. |
| 116 | IDL | Input port for the ID meter control signal. |
| 117 | VDL | Input port for the VD meter control signal. |
| 118 | THML | Input port for the PA unit temperature detect signal. |

| Pin number | Port name | Description |
|---|---|---|
| 119 | FANI | Input port for the driving current detect signal at the cooling fan. |
| 120 | EPAD | Input port for the external keypad on the rear panel. |
| 121 | DX1A | Input port for the data signal from the DSP IC on the DSP-A board. |
| 122 | DX1B | Input port for the data signal from the DSP IC on the DSP-B board. |
| 123 | DX1T | Input port for the data signal from the DSP IC on the DSP-TX board. |
| 124 | DX1S | Input port for the data signal from the DSP IC on the SCOPE unit. |
| 127 | IKEY | Input port for the internal antenna tuner KEY signal. |
| 128 | SKYS | Input port for the straight key. |
| 135 | DSKY | Outputs CW/RTTY keying signal to the DSP IC. |
| 137 | PWRS | Outputs power control signal to the linear circuit.<br>High: The linear circuit is ON. |
| 138 | METCK | Outputs clock signal to the D/A converter (IC603) for the external meter. |
| 140 | METLR | Outputs clock signal to the D/A converter (IC603) for the external meter. |
| 142 | METDT | Outputs data signal to the D/A converter (IC603) for the external meter. |

### 3-7-2 FRONT CPU (DISPLAY BOARD; IC6)

| Pin number | Port name | Description |
|---|---|---|
| 1 | CNTV | Outputs LCD contrast control signal. |
| 2 | BRIV | Outputs LCD brightness control signal. |
| 3 | LDAT | Outputs data signal to the SERI PARA IC (IC7, pin 3). |
| 4 | LST | Outputs strobe signal to the SERI PARA IC (IC7, pin 5). |
| 5 | RTCCK | Outputs clock signal to the clock IC (IC601, pin 6). |
| 8 | RTCCE | Outputs the clock IC (IC601, pin 3) select signal.<br>High : The clock IC is selected. |
| 9 | MOND | Outputs [MONITOR] LED control signal. |
| 17 | RSB | Input port for B phase signal from [RIT] control (150 pulse). |
| 18 | RSA | Input port for A phase signal from [RIT] control (150 pulse). |
| 19 | SSB | Input port for B phase signal from sub dial (1000 pulse). |
| 20 | SSA | Input port for A phase signal from sub dial (1000 pulse). |
| 21 | MSB | Input port for B phase signal from main dial (1000 pulse). |
| 22 | MSA | Input port for A phase signal from main dial (1000 pulse). |
| 23 | TMD | Outputs [TIMER] LED control signal.<br>High : While lighting. |
| 24 | LEDV | Outputs LED brightness control signal. |
| 25 | BKLS | Outputs LCD backlight control signal.<br>High : While lighting. |
| 26 | CFLV | Outputs CFL backlight control signal. |
| 28 | PHNI | Input port for the detecting signal whether the headphones are connected or not.<br>High : Headphones are connected. |
| 33 | LTXD | Outputs data signals by 38400 bps. |
| 34 | LRXD | Input port for data signals by 38400 bps. |
| 35 | DOTK | Input port for the connected electric keyer DOT signal. |
| 36 | DSHK | Input port for the connected electric keyer DASH signal. |
| 37 | SQSS | Outputs squelch signal to [MIC] jack. |
| 38 | RTCDT | I/O port for data signals from/to the clock IC (IC601, pins 4 or 5). |
| 39 | MSPK | Input port for [SPEECH] for the main band. |
| 40 | TRAK | Input port for [TRANSMIT]. |
| 41 | F1K | Input port for [F-1]. |
| 42 | F2K | Input port for [F-2]. |
| 43 | F3K | Input port for [F-3]. |
| 45 | F4K | Input port for [F-4]. |

| Pin number | Port name | Description |
|---|---|---|
| 46 | F5K | Input port for [F-5]. |
| 47 | F6K | Input port for [F-6]. |
| 48 | F7K | Input port for [F-7]. |
| 49 | SSBK | Input port for [SSB. |
| 50 | CWK | Input port for [CW]. |
| 51 | RTYK | Input port for [RTTY/PSK]. |
| 52 | AMK | Input port for [AM/FM]. |
| 53 | DATA | Input port for [DATA]. |
| 54 | MSCK | Input port for [M.SCOPE]. |
| 55 | EXTK | Input port for [EXIT/SET]. |
| 56 | PLYK | Input port for [PLAY]. |
| 57 | RECK | Input port for [REC]. |
| 58 | XFCK | Input port for [XFC]. |
| 59 | EQRK | Input port for [M=S]. |
| 61 | MINK | Input port for [MAIN]. |
| 63 | CHGK | Input port for [CHANGE]. |
| 64 | SUBK | Input port for [SUB]. |
| 65 | MPRK | Input port for [MP-R]. |
| 66 | MWK | Input port for [MW]. |
| 67 | UPK | Input port for [▲]. |
| 68 | DWK | Input port for [▼]. |
| 69 | MPWK | Input port for [MP-W]. |
| 70 | VMK | Input port for [V/M]. |
| 71 | MATK | Input port for [AUTO TUNE] for main band. |
| 72 | MTSK | Input port for [TS] for main band. |
| 73 | PWRK | Input port for [POWER]. |
| 74 | MLCK | Input port for [LOCK] for main band. |
| 75 | SATK | Input port for [AUTO TUNE] for sub band. |
| 76 | STSK | Input port for [TS] for sub band. |
| 77 | SSPK | Input port for [SPEECH] for sub band. |
| 78 | SLCK | Input port for [LOCK] for sub band. |
| 79 | SP2B | Input port for B phase signal from [PBT2] dial for sub band. |
| 80 | SP2A | Input port for A phase signal from [PBT2] dial for sub band. |
| 81 | SP1B | Input port for B phase signal from [PBT1] dial for sub band. |
| 82 | SP1A | Input port for A phase signal from [PBT1] dial for sub band. |
| 83 | MP2B | Input port for B phase signal from [PBT2] dial for main band. |
| 84 | MP2A | Input port for A phase signal from [PBT2] dial for main band. |
| 85 | MP1B | Input port for B phase signal from [PBT1] dial for main band. |
| 86 | MP1A | Input port for A phase signal from [MAIN PBT1] dial. |

### 3-7-3 CPDL CPU (LOGIC UNIT; IC605)

| Pin number | Port name | Description |
|---|---|---|
| 39 | CSTB | Outputs strobe signal to the band controller (CTRL board; IC51; pin 1). |
| 40 | FSTB | Outputs strobe signals to the relay controllers (CTRL board; IC55 and IC56, pin 1). |
| 41 | DPSTA | Outputs strobe signals to the relay controllers (BPF unit; IC101 and IC102, pin 5). |
| 42 | DPSTB | Outputs strobe signals to the relay controller2 (BPF unit; IC401 and IC402, pin 5). |
| 49 | OSS1 | Outputs the reference signal switching signal.<br>High : Outputs reference signal. |
| 50 | OSS2 | Outputs internal/external reference signal select signal.<br>Low : The external reference signal is selected. |
| 52 | OCS | Outputs chip select signal to adjust the OCXO reference on the OSC unit. |
| 53 | RSTBA | Outputs strobe signals to the RX-A circuit. |
| 54 | RSTBB | Outputs strobe signals to the RX-B circuit. |
| 55 | DSONA | Outputs the DIGISEL-A unit control signal. |
| 56 | DSAPA | Outputs the amplifier control signal to the DIGISEL-A unit. |
| 58 | DSTBA | Outputs strobe signals to the DIGISEL-A unit. |
| 59 | DSONB | Outputs the DIGISEL-B unit control signal. |
| 60 | DSAPB | Outputs the amplifier control signal to the DIGISEL-B unit. |
| 61 | DSTBB | Outputs strobe signals to the DIGISEL-B unit. |
| 63<br>64 | MSTB1<br>MSTB2 | Output strobe signals to the MAIN unit. |
| 65 | ASTB1 | Outputs strobe signal to the D/A converter (MAIN unit; IC330; pin 15). |
| 66 | ASTB2 | Outputs strobe signal to the D/A converter (MAIN unit; IC331, pin 15). |
| 67 | DFRA | Outputs frame signal for data setting to the DSP-A unit. |
| 68 | DFXA | Outputs frame signal for data reading to the DSP-A unit. |
| 70 | VSQA | Input port for voice squelch control signal from the DSP-A board.<br>High : Voice squelch is open. |
| 71 | RTDA | Input port for RTTY, BPSK and QPSK decoded data signal from the DSP-A board. |
| 72 | TNDA | Input port for the tone squelch control or QPSK decoding data signals.<br>High : Tone squelch is open. |
| 74 | DULSA | Outputs unlock signal to the DSP-A board.<br>High : Unlock. |
| 77 | DFRB | Outputs frame signal for data setting to the DSP-B unit. |
| 78 | DFXB | Outputs frame signal for data reading to the DSP-B unit. |
| 79 | VSQB | Input port for voice squelch control signal from the DSP-B board.<br>High : Voice squelch is open. |
| 81 | RTDB | Input port for RTTY, BPSK and QPSK decoded data signal from the DSP-B board. |
| 82 | TNDB | Input port for the tone squelch control or QPSK decoding data signals from the DSP-B board.<br>High : Tone squelch is open |
| 85 | DULSB | Outputs unlock signal to the DSP-B board.<br>High : Unlock. |
| 86 | DFRT | Outputs frame signal for data setting to the DSP-TX unit. |
| 87 | DFXT | Outputs frame signal for data reading to the DSP-TX unit. |
| 90 | DAVOX | Input port for the ANT VOX control signal.<br>High : While receiving. |
| 91 | CTFL | Input port for the CW transmitting status signal. |
| 92 | DFRS | Outputs frame signal for data setting to the DSP-SCOPE unit. |
| 93 | DFXS | Outputs frame signal for data reading data to the DSP-SCOPE unit. |
| 94<br>95 | DRESL<br>DRESH | Output reset signals to the DDS and DSP ICs. |

### 3-7-4 MAIN CPU1 (LOGIC UNIT; IC103 )

| Pin number | Port name | Description |
|---|---|---|
| 1 | TMS | Input port for the mode signal. |
| 2 | TCK | Input port for the clock signal. |
| 5 | TDI | Input port for the data signal. |
| 6–10 | CS0<br>CS1<br>CS4<br>CS5<br>CS6 | Output chip select signals. |
| 11 | BS | Outputs bus starting signal. |
| 12 | WE0/REG | Outputs D7–D0 select signal. |
| 13 | WE1 | Outputs D15–D8 select signal. |
| 14 | D0 | I/O port for the data signal. |
| 19–28, 31–35 | D1–D10, D11–D15 | I/O ports for the data signals. |
| 36 | CAS0/DQM0 | Outputs D7–D0 select signal. |
| 37 | CAS1/DQM1 | Outputs D15–D8 select signal. |
| 38 | RD/WR | Outputs read/write control signal. |
| 39 | CKIO | Outputs clock signal. |
| 49, 50 | CS2, CS3 | Output chip select signals. |
| 51–54, 57–66, 69–72 | A0–A3, A4–A13, A14–A17 | Output address signals. |
| 73 | CAS2/DQM2 | Outputs D23–D16 select signal. |
| 74 | CAS3/DQM3 | Outputs D31–D24 select signal. |
| 75–78, 83–92, 95, 96 | D16–D19, D20–D29, D30, D31 | I/O ports for the data signals. |
| 99–104, 107, 108 | A18–A23, A24, A25 | Output address signals. |
| 109 | WE2/ICIORD | Outputs D23–D16 select signal. |
| 110 | WE3/ICIOWR | Outputs D31–D24 select signal. |
| 113 | SLEEP | Input port for the sleep signal. |
| 125 | PCICLK | Input port for the clock signal from the buffer amplifier (IC106). |
| 128 | SERR | I/O port for the system error signal. |
| 129, 130, 133–138, 140–142, 147–151 | AD31, AD30, AD29–AD24, AD23–AD21, AD20–AD16 | I/O ports for the buffer amplifier (IC106) address signals. |
| 156 | DEVSEL | I/O port for the device selecting signal. |
| 164–168, 171–173, 177–182, 185, 186 | AD15–AD11, AD10–AD8, AD7–AD2, AD1, AD0 | I/O ports for the buffer amplifier (IC106) address signals. |
| 187–190 | IRL0–IRL3 | Input ports for the interrupt signals. |
| 193 | XTAL2 | Output port for the crystal oscillator. |
| 194 | EXTAL2 | Input port for the crystal oscillator signal. |
| 197 | CA | Input port for the hardware stand-by signal. |
| 198, 199 | RESET, TRST | Input ports for the reset signal. |
| 200 | MRESET | Input port for the manual reset signal. |
| 206 | TXD | Outputs the buffer amplifier (IC106) data signal. |
| 212 | RXD | Input port for the buffer amplifier (IC106) data signal. |
| 215 | SCK | I/O port for the buffer amplifier (IC106) clock signal. |
| 246 | TDO | Outputs the data signal. |
| 255 | XTAL | Output port for the crystal oscillator. |
| 256 | EXTAL | Input port for the crystal oscillator signal. |

### 3-7-5 RELAY CONTROLLER (CTRL BOARD; IC55)

| Pin number | Port name | Description |
|---|---|---|
| 4 | LPF2 | Outputs the low-pass filter (2–4 MHz) select signal. |
| 5 | LPF8 | Outputs the low-pass filter (22–30 MHz) select signal. |
| 6 | LPF4 | Outputs the low-pass filter (6.9–10 MHz) select signal. |
| 7 | LPF7 | Outputs the low-pass filter (18–22 MHz) select signal. |
| 11 | LPF5 | Outputs the low-pass filter (10–14 MHz) select signal. |
| 12 | LPF9 | Outputs the low-pass filter (30–60 MHz) select signal. |
| 13 | LPF6 | Outputs the low-pass filter (14–18 MHz) select signal. |
| 14 | LPF3 | Outputs the low-pass filter (4–6.9 MHz) select signal. |

### 3-7-6 RELAY CONTROLLER (CTRL BOARD; IC56)

| Pin number | Port name | Description |
|---|---|---|
| 4 | LPF1 | Outputs the low-pass filter (0.03–2 MHz) select signal. |
| 5 | ANT4R | Outputs the antenna ([ANT 4]; RX only) select signal for main band. |

### 3-7-7 RELAY CONTROLLER (ANT-SW UNIT; IC11)

| Pin number | Port name | Description |
|---|---|---|
| 6 | ANT1A | Outputs the antenna ([ANT 1]) select signal for main band. |
| 7 | ANT1B | Outputs the antenna ([ANT 1]) select signal for sub band. |
| 8 | ANT1G | Outputs the control signal to connect the antenna ([ANT 1]) to [GND]. |
| 9 | ANT2A | Outputs the antenna ([ANT 2]) select signal for main band. |
| 10 | ANT2B | Outputs the antenna ([ANT 2]) select signal for sub band. |
| 11 | ANT2G | Outputs the control signal to connect the antenna ([ANT 2]) to [GND]. |
| 12 | ANT3A | Outputs the antenna ([ANT 3]) select signal for main band. |
| 13 | ANT3B | Outputs the antenna ([ANT 3]) select signal for sub band. |
| 14 | ANT3G | Outputs the control signal to connect the antenna ([ANT 3]) to [GND]. |
| 15 | ANT4A | Outputs the antenna ([ANT 4]) select signal for main band. |
| 16 | ANT4B | Outputs the antenna ([ANT 4]) select signal for sub band. |
| 17 | ANT4G | Outputs the control signal to connect the antenna ([ANT 4]) to [GND]. |

### 3-7-8 RELAY CONTROLLER (BPF UNIT; IC101)

| Pin number | Port name | Description |
|---|---|---|
| 6 | B0A | Outputs the RX-A circuit bandpass filter (0.03–1.6 MHz) select signal. |
| 7 | B1A | Outputs the RX-A circuit bandpass filter (1.6–2 MHz) select signal. |
| 8 | B2A | Outputs the RX-A circuit bandpass filter (2–3 MHz) select signal. |
| 9 | B3A | Outputs the RX-A circuit bandpass filter (3–4 MHz) select signal. |
| 10 | B4A | Outputs the RX-A circuit bandpass filter (4–6 MHz) select signal. |
| 11 | B5A | Outputs the RX-A circuit bandpass filter (6–8 MHz) select signal. |
| 12 | B6A | Outputs the RX-A circuit bandpass filter (8–11 MHz) select signal. |
| 13 | B7A | Outputs the RX-A circuit bandpass filter (11–15 MHz) select signal. |
| 14 | B8A | Outputs the RX-A circuit bandpass filter (15–22 MHz) select signal. |
| 15 | B9A | Outputs the RX-A circuit bandpass filter (22–30 MHz) select signal. |
| 16 | B10A | Outputs the RX-A circuit bandpass filter (50–54 MHz) select signal. |
| 17 | B10WA | Outputs the RX-A circuit bandpass filter (30–50 MHz and 54–60 MHz) select signal. |

### 3-7-9 RELAY CONTROLLER (BPF UNIT; IC102)

| Pin number | Port name | Description |
|---|---|---|
| 6 | HF50A | Outputs the RX-A circuit bandpass filter group select signal.<br>Low : While receiving on 30–60 MHz. |
| 7 | AT12A | Outputs the RX-A circuit 12 dB attenuator control signal.<br>High : The 12 dB attenuator is ON. |
| 8 | AT6A | Outputs the RX-A circuit 6 dB attenuator control signal.<br>High : The 6 dB attenuator is ON. |
| 9 | AT3A | Outputs the RX-A circuit 3 dB attenuator control signal.<br>High : The 3 dB attenuator is ON. |
| 11 | DWSPA | Outputs the RX-A circuit split function control signal.<br>Low : The split function is ON. |
| 12 | RMUTA | Outputs the RX-A circuit mute control signal.<br>Low : While the RX-A circuit is muting. |
| 13 | TRVS | Outputs the transverter's receiver circuit control signal.<br>High : The transverter is ON. |
| 14 | RSELA | Outputs receive antenna ([ANT 4]) select signal.<br>Low : [ANT 4] is selected. |
| 16 | VPR2A | Outputs the RX-A circuit 50 MHz preamplifier 2 control signal.<br>Low : The pre-amplifier 2 is ON. |
| 17 | VDWA | Outputs the RX-A circuit 50 MHz correction amplifier control signal.<br>Low : The pre-amplifier 2 is ON (Receive 50 MHz band). |

### 3-7-10 RELAY CONTROLLER (BPF UNIT; IC401)

| Pin number | Port name | Description |
|---|---|---|
| 6 | B0B | Outputs the RX-B circuit bandpass filter (0.03–1.6 MHz) select signal. |
| 7 | B1B | Outputs the RX-B circuit bandpass filter (1.6–2 MHz) select signal. |
| 8 | B2B | Outputs the RX-B circuit bandpass filter (2–3 MHz) select signal. |
| 9 | B3B | Outputs the RX-B circuit bandpass filter (3–4 MHz) select signal. |
| 10 | B4B | Outputs the RX-B circuit bandpass filter (4–6 MHz) select signal. |
| 11 | B5B | Outputs the RX-B circuit bandpass filter (6–8 MHz) select signal. |
| 12 | B6B | Outputs the RX-B circuit bandpass filter (8–11 MHz) select signal. |
| 13 | B7B | Outputs the RX-B circuit bandpass filter (11–15 MHz) select signal. |
| 14 | B8B | Outputs the RX-B circuit bandpass filter (15–22 MHz) select signal. |
| 15 | B9B | Outputs the RX-B circuit bandpass filter (22–30 MHz) select signal. |
| 16 | B10B | Outputs the RX-B circuit bandpass filter (50–54 MHz) select signal. |
| 17 | B10WB | Outputs the RX-B circuit bandpass filter (30–50 MHz and 54–60 MHz) select signal. |

### 3-7-11 RELAY CONTROLLER (BPF UNIT; IC402)

| Pin number | Port name | Description |
|---|---|---|
| 6 | HF50B | Outputs the RX-B circuit bandpass filter group select signal.<br>Low : While receiving on 30–60 MHz. |
| 7 | AT12B | Outputs the RX-B circuit 12 dB attenuator control signal.<br>High : The 12 dB attenuator is ON. |
| 8 | AT6B | Outputs the RX-B circuit 6 dB attenuator control signal.<br>High : The 6 dB attenuator is ON. |
| 9 | AT3B | Outputs the RX-B circuit 3 dB attenuator control signal.<br>High : The 3 dB attenuator is ON. |
| 11 | DWSPB | Outputs the RX-B circuit receive signals switch signal.<br>Low : The splitter function is ON. |
| 12 | RMUTB | Outputs the RX-B circuit mute control signal.<br>Low : While the RX-B circuit is muting. |
| 16 | VPR2B | Outputs the RX-B circuit 50 MHz preamplifier 2 control signal.<br>Low : The pre-amplifier2 is ON. |
| 17 | VDWB | Outputs the RX-B circuit 50 MHz correction amplifier control signal.<br>Low : The pre-amplifier 2 is ON (Receive on 50 MHz band). |

### 3-7-12 CONTROLLER IC (DIGISEL-A UNIT; IC4)

| Pin number | Port name | Description |
|---|---|---|
| 6, 7 | X1A, X2A | Outputs the network serial reactance control signals. |
| 8–11 | S1A–S4A | Output the network I/O capacitance control signals. |
| 12–17 | C1A–C6A | Output the network capacitance control signals. |

### 3-7-13 CONTROLLER IC (DIGISEL-A UNIT; IC5)

| Pin number | Port name | Description |
|---|---|---|
| 6–10 | C7A–C11A | Output the network capacitance control signals. |
| 11–17 | L1A–L7A | Output the network reactance control signals. |

### 3-7-14 CONTROLLER IC (DIGISEL-B UNIT; IC504)

| Pin number | Port name | Description |
|---|---|---|
| 6, 7 | X1B, X2B | Output the network serial reactance control signals. |
| 8–11 | S1B–S4B | Output the network I/O capacitance control signals. |
| 12–17 | C1B–C6B | Output the network capacitance control signals. |

### 3-7-15 CONTROLLER IC (DIGISEL-B UNIT; IC505)

| Pin number | Port name | Description |
|---|---|---|
| 6–10 | C7B–C11B | Output the network capacitance control signals. |
| 11–17 | L1B–L7B | Output the network reactance control signals. |

### 3-7-16 RELAY CONTROLLER (RXPLL-A UNIT; IC1701)

| Pin number | Port name | Description |
|---|---|---|
| 7 | HFOFA | Outputs the HF band's pre-amplifier 2 control signal for the RX-A circuit.<br>High : The pre-amplifiers are OFF. |
| 11 | VP1A | Outputs the 50 MHz band's pre-amplifier 1 control signal for the RX-A circuit.<br>High : The pre-amplifier 1 is ON. |
| 12 | HP2A | Outputs the HF band's pre-amplifier 2 control signal for the RX-A circuit.<br>High : The pre-amplifier 2 is ON. |
| 13 | HP1A | Outputs the HF band's pre-amplifier 1 control signal for the RX-A circuit.<br>High : The pre-amplifier 1 is ON. |
| 14 | VPOFA | Outputs the 50 MHz band's pre-amplifier control signal for the RX-A circuit.<br>High : The pre-amplifier is OFF. |

### 3-7-17 RELAY CONTROLLER (RXPLL-A UNIT; IC1702)

| Pin number | Port name | Description |
|---|---|---|
| 4 | HSEL | Outputs the 1st IF control signal for the RX-A circuit.<br>High : While receiving on HF band. |
| 5 | VSEL | Outputs the 1st IF control signal for the RX-A circuit.<br>High : While receiving on 50 MHz. |
| 6 | IFW | Outputs 1st IF filter (FI1401) select signal for the RX-A circuit.<br>High : Select 15 kHz IF filter. |
| 7 | IFN | Outputs 1st IF filter (FI1402) select signal for the RX-A circuit.<br>High : Select 6 kHz IF filter. |
| 14 | IFNN | Outputs 1st IF filter (FI1403) select signal for the RX-A circuit.<br>High : Select 3 kHz IF filter. |

### 3-7-18 RELAY CONTROLLER (RXPLL-B UNIT; IC1701)

| Pin number | Port name | Description |
|---|---|---|
| 7 | HFOFB | Outputs the HF band's pre-amplifier 2 control signal for the RX-B circuit.<br>High : The pre-amplifiers are OFF. |
| 11 | VP1B | Outputs the 50 MHz band's pre-amplifier 1 control signal for the RX-B circuit.<br>High : The pre-amplifier1 is ON. |
| 12 | HP2B | Outputs the HF band's pre-amplifier 2 control signal for the RX-B circuit.<br>High : The pre-amplifier 2 is ON. |
| 13 | HP1B | Outputs the HF band's pre-amplifier 1 control signal for the RX-B circuit.<br>High : The pre-amplifier 1 is ON. |
| 14 | VPOFB | Outputs the 50 MHz band's pre-amplifier control signal for the RX-B circuit.<br>High : The pre-amplifier is OFF. |

### 3-7-19 RELAY CONTROLLER (RXPLL-B UNIT; IC1702)

| Pin number | Port name | Description |
|---|---|---|
| 4 | HSEL | Outputs the 1st IF control signal for the RX-B circuit.<br>High : While receiving on HF band. |
| 5 | VSEL | Outputs the 1st IF control signal for the RX-B circuit.<br>High : While receiving on 50 MHz. |
| 6 | IFW | Outputs 1st IF filter (FI1401) select signal for the RX-B circuit.<br>High : Select 16 kHz IF filter. |
| 7 | IFN | Outputs 1st IF filter (FI1402) select signal for the RX-B circuit.<br>High : Select 6 kHz IF filter. |
| 14 | IFNN | Outputs 1st IF filter (FI1403) select signal for the RX-B circuit.<br>High : Select 3 kHz IF filter. |

### 3-7-20 BUFFER IC (MAIN UNIT; IC291)

| Pin number | Port name | Description |
|---|---|---|
| 12 | TRVSM | Outputs the transmit signal switching signal.<br>High : The transverter is ON. |
| 13 | SMUT | Outputs the SCOPE 3rd LO muting signal.<br>High : While muting. |
| 14 | SSB | Outputs the scope IF signal switching signal.<br>High : Input from the RX-B circuit. |
| 15 | SSA | Outputs the scope IF signal switching signal.<br>High : Input from the RX-A circuit. |
| 16 | MONS | Outputs the transmitting monitor control signal.<br>High : Transmitting monitor is ON. |
| 17 | MCPS | Outputs modulation input signal control signal.<br>High : Input from the microphone or ACC jack. |
| 18 | MMUT | Outputs the microphone mute control signal.<br>High : While muting. |

### 3-7-21 BUFFER IC (MAIN UNIT; IC311)

| Pin number | Port name | Description |
|---|---|---|
| 11 | FMS | Outputs FM mode select signal. |
| 12 | UNSB | Outputs mode selecting signal other than SSB and AM modes. |
| 13 | B_AFA | Outputs AF signals select signal.<br>High : While outputs AF signals to the ACC-B connector. |
| 14 | A_AFA | Outputs AF signals select signal.<br>High : While outputs AF signals to the ACC-A connector. |
| 15 | SPON | Outputs the internal speaker switching signal.<br>High : While no headphones are connected. |
| 16 | PMIX | Outputs phone L/R mixer control signal.<br>High : While mixing. |
| 17 | MAFS | Outputs AF signal selecting signal from the MAIN pin or the SUB pin of [MIC] jack.<br>High : The SUB pin is selected. |
| 18 | CROSS | Outputs receiver circuits switch signal while split operating.<br>High : Set to [MAIN] to B-channel.<br>: Set to [SUB] to A-channel. |

### 3-7-22 BUFFER IC (MAIN UNIT; IC251)

| Pin number | Port name | Description |
|---|---|---|
| 11 | TXB7 | Outputs the bandpass filter (B7) selecting signal during transmit.<br>High : While transmitting on 11–15 MHz. |
| 12 | TXB6 | Outputs the bandpass filter (B6) selecting signal during transmit.<br>High : While transmitting on 8–11 MHz. |
| 13 | TXB5 | Outputs the bandpass filter (B5) selecting signal during transmit.<br>High : While transmitting on 6–8 MHz. |
| 14 | TXB4 | Outputs the bandpass filter (B4) selecting signal during transmit.<br>High : While transmitting on 4–6 MHz. |
| 15 | TXB3 | Outputs the bandpass filter (B3) selecting signal during transmit.<br>High : While transmitting on 3–4 MHz. |
| 16 | TXB2 | Outputs the bandpass filter (B2) selecting signal during transmit.<br>High : While transmitting on 2–3 MHz. |
| 17 | TXB1 | Outputs the bandpass filter (B1) selecting signal during transmit.<br>High : While transmitting on 1.6–2 MHz. |
| 18 | TXB0 | Outputs the bandpass filter (B0) selecting signal during transmit.<br>High : While transmitting on 0.03–1.6 MHz. |

### 3-7-23 BUFFER IC (MAIN UNIT; IC261)

| Pin number | Port name | Description |
|---|---|---|
| 12 | AMS | Outputs the transmit output power control signal.<br>High : Transmitting in AM mode. |
| 13 | 50MS | Outputs the transmit output power control signal.<br>High : Transmitting in 50 MHz band. |
| 14 | HFS | Outputs the HF band transmitting power control signal. |
| 16 | TXB10 | Outputs the bandpass filter (B10) selecting signal.<br>High : While transmitting on 30–60 MHz. |
| 17 | TXB9 | Outputs the bandpass filter (B9) selecting signal.<br>High : While transmitting on 22–30 MHz. |
| 18 | TXB8 | Outputs the bandpass filter (B8) selecting signal.<br>High : While transmitting on 15–22 MHz. |

### 3-7-24 SERIAL/PARAMETER IC (RXPLL-A UNIT; IC1)

| Pin number | Port name | Description |
|---|---|---|
| 4 | PST2A | Outputs the strobe signals to the 1st LO PLL IC on the RXPLL-A unit. |
| 5 | PST1A | Outputs the strobe signals to the 1st LO DDS IC on the RXPLL-A unit. |
| 6 | PST3A | Outputs the strobe signals to the 2nd LO DDS IC on the RXPLL-A unit. |
| 7 | PST4A | Outputs the strobe signals to the T3 LO DDS IC on the RXPLL-A unit. |

### 3-7-25 SERIAL/PARAMETER IC (RXPLL-B UNIT; IC1)

| Pin number | Port name | Description |
|---|---|---|
| 4 | PST2B | Outputs the strobe signals to the 1st LO PLL IC on the RXPLL-B unit. |
| 5 | PST1B | Outputs the strobe signals to the 1st LO DDS IC on the RXPLL-B unit. |
| 6 | PST3B | Outputs the strobe signals to the 2nd LO DDS IC on the RXPLL-B unit. |
| 7 | PST4B | Outputs the strobe signals to the T3 LO DDS IC on the RXPLL-B unit. |

### 3-7-26 DDS IC (RXPLL-A UNIT; IC101)

| Pin number | Port name | Description |
|---|---|---|
| 67 | MUTA | Outputs the 1st LO muting signal to the RXPLL-A unit.<br>High : While muting. |
| 68 | VA6S | Outputs the 1st LO VCO (VCO6) control signal to the RXPLL-A unit.<br>High : While receiving on 45–60 MHz. |
| 70 | VA5S | Outputs the 1st LO VCO (VCO5) control signal to the RXPLL-A unit.<br>High : While receiving on 30–45 MHz. |
| 71 | VA4S | Outputs the 1st LO VCO (VCO4) control signal to the RXPLL-A unit.<br>High : While receiving on 22–30 MHz. |
| 73 | VA3S | Outputs the 1st LO VCO (VCO3) control signal to the RXPLL-A unit.<br>High : While receiving on 15–22 MHz. |
| 74 | VA2S | Outputs the 1st LO VCO (VCO2) control signal to the RXPLL-A unit.<br>High : While receiving on 8–15 MHz. |
| 75 | VA1S | Outputs the 1st LO VCO (VCO1) control signal to the RXPLL-A unit.<br>High : While receiving on 0.03–8 MHz. |

### 3-7-27 DDS IC (RXPLL-B UNIT; IC101)

| Pin number | Port name | Description |
|---|---|---|
| 67 | MUTB | Outputs the 1st LO muting signal to the RXPLL-B unit.<br>High : While muting. |
| 68 | VB6S | Outputs the 1st LO VCO (VCO6) control signal to the RXPLL-B unit.<br>High : While receiving on 45–60 MHz. |
| 70 | VB5S | Outputs the 1st LO VCO (VCO5) control signal to the RXPLL-B unit.<br>High : While receiving on 30–45 MHz. |
| 71 | VB4S | Outputs the 1st LO VCO (VCO4) control signal to the RXPLL-B unit.<br>High : While receiving on 22–30 MHz. |
| 73 | VB3S | Outputs the 1st LO VCO (VCO3) control signal to the RXPLL-B unit.<br>High : While receiving on 15–22 MHz. |
| 74 | VB2S | Outputs the 1st LO VCO (VCO2) control signal to the RXPLL-B unit.<br>High : While receiving on 8–15 MHz. |
| 75 | VB1S | Outputs the 1st LO VCO (VCO1) control signal to the RXPLL-B unit.<br>High : While receiving on 0.03–8 MHz. |

### 3-7-28 D/A CONVERTER IC (MAIN UNIT; IC330)

| Pin number | Port name | Description |
|---|---|---|
| 2 | MICV | Outputs the modulation level from the microphone control signal. |
| 3 | DRIV | Outputs the drive gain control signal. |
| 4 | POCV | Outputs the transmit output power control signal. |
| 5 | BNDM | Outputs the operating band control signal for main band. |
| 6 | BNDS | Outputs the operating band control signal for sub band. |
| 7 | SATT | Outputs attenuator control signal to the SCOPE unit. |
| 8 | FANV | Outputs the PA cooling fan control signal. |
| 18 | MODVA | Outputs modulation input level from [ACC A] control signal. |
| 19 | MODVB | Outputs modulation input level from [ACC B] control signal. |

### 3-7-29 D/A CONVERTER IC (MAIN UNIT; IC331)

| Pin number | Port name | Description |
|---|---|---|
| 2 | AFGVS1 | Outputs the AF gain control signal for sub band (primary control). |
| 3 | AFGVS2 | Outputs the AF gain control signal for sub band (secondary control). |
| 4 | PHML1 | Outputs the main band's AF gain control signal for [PHONES] (primary control). |
| 5 | PHML2 | Outputs the main band's AF gain control signal for [PHONES] (secondary control). |
| 6 | PHSL1 | Outputs the sub band's AF gain control signal for [PHONES] (primary control). |
| 7 | PHSL2 | Outputs the sub band's AF gain control signal for [PHONES] (secondary control). |
| 8 | AAFVA | Outputs [ACC-A] AF output level control signal. |
| 9 | AAFVB | Outputs [ACC-B] AF output level control signal. |
| 12 | MAMS | Outputs AM mode selecting signal for main band.<br>Low : While selecting AM mode in main band. |
| 13 | SAMS | Outputs AM mode selecting signal for sub band.<br>Low : While selecting AM mode in sub band. |
| 18 | AFGVM1 | Outputs AF gain control signal for main band (primary control). |
| 19 | AFGVM2 | Outputs AF gain control signal for main band (secondary control). |

### 3-7-30 D/A CONVERTER IC (LOGIC UNIT; IC603)

| Pin number | Port name | Description |
|---|---|---|
| 1 | METS | Outputs external meter control signal for sub band. |
| 4 | METM | Outputs external meter control signal for main band. |

### 3-7-31 CPLD IC (LOGIC UNIT; IC52)

| Pin number | Port name | Description |
|---|---|---|
| 60, 61 63–68, 70 | IMS0–IMS8 | Output the matrix/strobe signals. |
| 71 | IMR0 | Input port for the matrix return signal. |
| 72 | IMRE0 | Outputs permit signal to read the matrix return signal. |
| 74 | IMR1 | Input port for the matrix return signal. |
| 76 | IMRE1 | Outputs permit signal to read the matrix return signal. |
| 77 | FR_STS | Input port for the writing status signal to the flash ROM (MEMORY board; IC2, pin 5). |
| 78 | FR_VPEN | Outputs permit signal to write data to the flash ROM (MEMORY board; IC2, pin 15). |
| 92 | DO_VS | Input port for the “VS” signal from the GDC IC (IC203). |
| 93 | DO_HS | Input port for the “HS” signal from the GDC IC (IC203). |
| 94 | EX_HS | Outputs “HS” signal for the external monitor. |
| 95 | EX_VS | Outputs “VS” signal for the external monitor. |

### 3-7-32 EXPANDER IC (TENKEY BOARD; IC1)

| Pin number | Port name | Description |
|---|---|---|
| 6 | MTXD | Outputs [TX] LED for main band control signal.<br>Low : While transmitting. |
| 7 | MRXD | Outputs [RX] LED fir main band control signal.<br>Low : While receiving a signal or squelch is opened in main band. |
| 8 | MLCD | Outputs [DIAL LOCK] LED for main dial control signal.<br>Low : [MAIN DIAL] is locked. |
| 9 | SPLD | Outputs [SPLIT] LED control signal.<br>Low : During spilt operation. |
| 10 | STXD | Outputs [TX] LED for sub band control signal.<br>Low : While transmitting in split operation. |
| 11 | SRXD | Outputs [RX] LED for sub band control signal.<br>Low : While receiving a signal or squelch is opened in sub band. |
| 12 | MLCD | Outputs [DIAL LOCK] LED for sub dial control signal.<br>Low : [SUB DIAL] is locked. |
| 13–16 | TKYD1, TKYD2, TKYD3, TKYD4 | Output tenkey backlight control signals. |

### 3-7-33 EXPANDER IC (TENKEY BOARD; IC2)

| Pin number | Port name | Description |
|---|---|---|
| 6 | MPCD | Outputs [PBT CLEAR] LED for main band control signal.<br>Low : While using the PBT function in main band. |
| 7 | SPCD | Outputs [PBT CLEAR] LED for sub band control signal.<br>Low : While using PBT function in sub band. |
| 8 | MAPD | Outputs [APF/TPF] LED for main band control signal.<br>Low : While using [APF/TPF] function in main band . |
| 9 | SAPD | Outputs [APF/TPF] LED for sub band control signal.<br>Low : While using [APF/TPF] function in sub band . |
| 12 | MNCD | Outputs [NOTCH ON] LED for main band control signal.<br>Low : While using [NOTCH] function in main band . |
| 13 | SNCD | Outputs [NOTCH ON] LED for sub band control signal.<br>Low : While using [NOTCH] function in sub band . |
| 14 | SUBD | Outputs [SUB] LED control signal.<br>Low : While sub band access is enabled. |
| 15 | MIND | Outputs [MAIN] LED control signal.<br>Low : While main band access is enabled. |

### 3-7-34 SERIAL/PARAMETER IC (DISPLAY BOARD; IC7)

| Pin number | Port name | Description |
|---|---|---|
| 7 | TN1D | Outputs [TUNER] LED control signal.<br>Low : While tuning. |
| 8 | TN2D | Outputs [TUNER] LED control signal.<br>Low : While the antenna is tuned. |
| 9 | VOXD | Outputs [VOX/BKIN] LED control signal.<br>Low : While using the VOX/break-in function. |
| 10 | MAGD | Outputs [AGC VR] LED for main band control signal.<br>Low : When setting the AGC with [AGC] control for main band. |
| 11 | MNRD | Outputs [NR] LED control signal.<br>Low : When the noise reduction is used in main band.. |
| 12 | MNBD | Outputs [NB] LED control signal.<br>Low : When the noise blanker is used in main band. |
| 13 | SAGD | Outputs [AGC VR] LED control signal.<br>Low : When setting the AGC with [AGC] control for sub band. |
| 14 | SNRD | Outputs [NR] LED control signal.<br>Low : When the noise reduction is used in sub band. |
| 15 | SNBD | Outputs [NB] LED control signal.<br>Low : When the noise blanker is used in sub band. |
| 16 | CFBD | Outputs CF memory card accessing indicator control signal.<br>Low : When the transceiver reading/writing data from/to the CF memory card. |
| 17 | STBD | Outputs [POWER] LED control signal.<br>Low : While the main power is ON and the transceiver's power is OFF. |

### 3-7-35 EXPANDER IC (DISPLAY BOARD; IC1)

| Pin number | Port name | Description |
|---|---|---|
| 1 | MAGL | Input port for [AGC] control signal for main band. |
| 2 | SAGL | Input port for [AGC] control signal for sub band. |
| 4 | SSQL | Input port for [SQL] control signal for sub band. |
| 5 | MSQL | Input port for [SQL] control signal for main band. |
| 12 | DELL | Input port for [DELAY] control signal. |
| 13 | MICL | Input port for [MIC] control signal. |
| 14 | PWRL | Input port for [RF] control signal. |
| 15 | KYSL | Input port for [KEY SPEED] control signal. |

### 3-7-36 EXPANDER IC (DISPLAY BOARD; IC2)

| Pin number | Port name | Description |
|---|---|---|
| 1 | MAFL | Input port for [AF] control for main band signal. |
| 2 | SAFL | Input port for [AF] control for sub band signal. |
| 4 | SRFL | Input port for [RF] control for sub band signal. |
| 5 | MRFL | Input port for [RF] control for main band signal. |
| 12 | SNBL | Input port for [NB] control for sub band signal. |
| 13 | MNRL | Input port for [NR] control for main band signal. |
| 14 | MNBL | Input port for [NB] control for main band signal. |
| 15 | SNRL | Input port for [NR] control for sub band signal. |

### 3-7-37 EXPANDER IC (DISPLAY BOARD; IC3)

| Pin number | Port name | Description |
|---|---|---|
| 1 | AVXL | Input port for [ANTI VOX] control signal. |
| 2 | BRIL | Input port for [BRIGHT] control signal. |
| 4 | MDGL | Input port for [DIGISEL] control for main band signal. |
| 5 | CNTL | Input port for [CONTRAST] control signal. |
| 12 | VOXL | Input port for [VOX GAIN] control signal. |
| 13 | MONL | Input port for [MONI GAIN] control signal. |
| 14 | CMPL | Input port for [COMP] control signal. |
| 15 | DRVL | Input port for [DRIVE] control signal. |

### 3-7-38 EXPANDER IC (DISPLAY BOARD; IC4)

| Pin number | Port name | Description |
|---|---|---|
| 1 | KI0 | Input port for [CLEAR], [DUAL WATCH] and [SPLIT]. |
| 2 | KI2 | Input port for both main and sub bands [APF/TPF]. |
| 4 | KI3 | Input port for both main and sub bands [FILTER] and [PBT CLEAR]. |
| 5 | KI1 | Input port for both main and sub bands [NOTCH], [RIT] and [ΔTX]. |
| 12 | PITL | Input port for [CW PITCH] control signal. |
| 13 | MNCL | Input port for [NOTCH] control for main band signal. |
| 14 | SDGL | Input port for [DIGI-SEL] control for sub band signal. |
| 15 | SNCL | Input port for [NOTCH] control for sub band signal. |

### 3-7-39 EXPANDER IC (DISPLAY BOARD; IC5)

| Pin number | Port name | Description |
|---|---|---|
| 1 | KI8 | Input port for [▶] switches from first to fourth. |
| 2 | KI10 | Input port for [AGC VR], [NR] and [NB] switches for main band. |
| 4 | KI11 | Input port for [MONI], [TUNER] and [TIMER]. |
| 5 | KI9 | Input port for [AGC VR], [NR] and [NB] switches for sub band. |
| 12 | KI7 | Input port for [▶] switches from fifth to seventh. |
| 13 | KI4 | Input port for [7 (3)], [18 (6)], [28 (9)] and [F-INP (ENT)]. |
| 14 | KI5 | Input port for [3.5 (2)], [14 (5)], [24 (8)] and [50 (0)]. |
| 15 | KI6 | Input port for [1.8 (1)], [10 (4)], [21 (7)] and [GENE (.)]. |

## 3-8 IF AND LO FREQUENCIES LIST

### 3-8-1 MAIN AND SUB 1ST LO FREQUENCIES LIST (FOR RECEIVING)

| MODE | MAIN 1ST LO FREQUENCY (MHz) | SUB 1ST LO FREQUENCY (MHz) |
|---|---|---|
| **USB** | 64.4865–124.4565 | 64.5865–124.5565 |
| **LSB** | 64.4835–124.4535 | 64.5835–124.5535 |
| **CW** | 64.4850–124.4550 | 64.5850–124.5550 |
| **RTTY** | 64.48483–124.45483 | 64.58483–124.55483 |
| **PSK31** | 64.4850–124.4550 | 64.5850–124.5550 |
| **AM** | 64.4850–124.4550 | 64.5850–124.5550 |
| **FM** | 64.4850–124.4550 | 64.5850–124.5550 |

### 3-8-2 MAIN AND SUB 2ND LO FREQUENCIES LIST (FOR RECEIVING)

| MODE | MAIN 2ND LO FREQUENCY (kHz) | SUB 2ND LO FREQUENCY (MHz) |
|---|---|---|
| **USB** | 64.4925 | 64.5925 |
| **LSB** | 64.4895 | 64.5985 |
| **CW*[1]** | 64.4910 - CW PITCH | 64.5910 - CW PITCH |
| **RTTY*[2]** | 64.48868 | 64.58868 |
| **PSK31** | 64.4925 | 64.5925 |
| **AM** | 64.4910 | 64.5910 |
| **FM** | 64.4910 | 64.5910 |

*[1]CW-PITCH: 300–900 Hz, *[2]RTTY TONE: 21.25 Hz; SHIFT: 170 Hz

### 3-8-3 3RD IF AND LO FREQUENCIES LIST (FOR TRANSMITTING)

| MODE | 3RD IF FREQUENCY (kHz) | 3RD LO FREQUENCY (kHz) |
|---|---|---|
| **USB** | 36.000 | 492.500 |
| **LSB** | 36.000 | 489.500 |
| **CW** | 36.000 | 491.000 |
| **RTTY*** | 33.875 | 488.705 |
| **PSK31** | 36.000 | 491.000 |
| **AM** | 36.000 | 491.000 |
| **FM** | 36.000 | 491.000 |

*RTTY TONE: 21.25 Hz; SHIFT: 170 Hz

### 3-8-4 2ND IF AND LO FREQUENCIES LIST (FOR TRANSMITTING)

| MODE | 2ND IF FREQUENCY (kHz) | 2ND LO FREQUENCY (MHz) |
|---|---|---|
| **USB** | 456.500 | 64.000 |
| **LSB** | 453.500 | |
| **CW** | 455.000 | |
| **RTTY** | 454.830 | |
| **PSK31** | 455.000 | |
| **AM** | 455.000 | |
| **FM** | 455.000 | |

### 3-8-5 1ST IF FREQUENCIES LIST (FOR TRANSMITTING)

| MODE | 1ST IF FREQUENCY (MHz) |
|---|---|
| **USB** | 64.45650 |
| **LSB** | 64.45350 |
| **CW** | 64.45500 |
| **RTTY** | 64.45483 |
| **PSK31** | 64.45500 |
| **AM** | 64.45500 |
| **FM** | 64.45500 |

### 3-8-6 1ST LO FREQUENCIES LIST (FOR TRANSMITTING)

| BAND (MHz) | LO FREQUENCY (MHz) | BAND (MHz) | LO FREQUENCY (MHz) |
|---|---|---|---|
| **1.9** | 66.2580–66.2800 | **10** | 66.2580–66.2800 |
| | 66.3625–66.3675 | **14** | 66.3625–66.3675 |
| **3.5** | 67.9550–68.0300 | **18** | 67.9550–68.0300 |
| **3.8** | 68.2020–68.2090 | **21** | 68.2020–68.2090 |
| | 68.2460–68.2600 | **24** | 68.2460–68.2600 |
| **4.63** | 69.0850 | **28** | 69.0850 |
| **7** | 71.4550–71.5550 | **50** | 71.4550–71.5550 |

# SECTION 4 ADJUSTMENT PROCEDURES

## 4-1 PREPARATION BEFORE SERVICING

### ■ REQUIRED TEST EQUIPMENT

| EQUIPMENT | GRADE AND RANGE | | EQUIPMENT | GRADE AND RANGE | |
|---|---|---|---|---|---|
| AC outlet | Voltage | : 85–265 V | Audio generator | Frequency range<br>Measuring range | : 300–3000 Hz<br>: 1–500 mV |
| RF power meter (terminated type) | Measuring range<br>Frequency range<br>Impedance<br>SWR | : 250–300 W<br>: 1.8–100 MHz<br>: 50 Ω<br>: Less than 1.2 : 1 | Standard signal generator (SSG) | Frequency range<br>Output level | : 0.1–100 MHz<br>: 0.1 µV to 32 mV (–127 to –17 dBm) |
| Frequency counter | Frequency range<br>Frequency accuracy<br>Sensitivity | : 0.1–100 MHz<br>: ±0.5 ppm or better<br>: 100 mV or better | Digital multimeter | Input impedance | : 10 MΩ/DC or more |
| RF voltmeter | Frequency range<br>Measuring range | : 0.1–100 MHz<br>: 0.01–10 V | DC voltmeter | Input impedance | : 50 kΩ/V DC or better |
| AC millivolt meter | Measuring range | : 10 mV to 10 V | DC ammeter | Measurement capability | : 5 A/30 A |
| Attenuator | Power attenuation<br>Capacity | : 50 or 60 dB<br>: 200 W | Spectrum analyzer | Frequency range<br>Spectraum bandwidth | : At least 90 MHz<br>: 100 kHz or more |
| Oscilloscope | Frequency range<br>Measuring range | : DC to 20 MHz<br>: 0.01–20 V | External speaker | Input impedance<br>Capacity | : 8 Ω<br>: 5 W or more |
| | | | Dummy load | Input impedance<br>Capacity | : 50 and 100 Ω<br>: 200 W or more |

### ■ CONNECTIONS

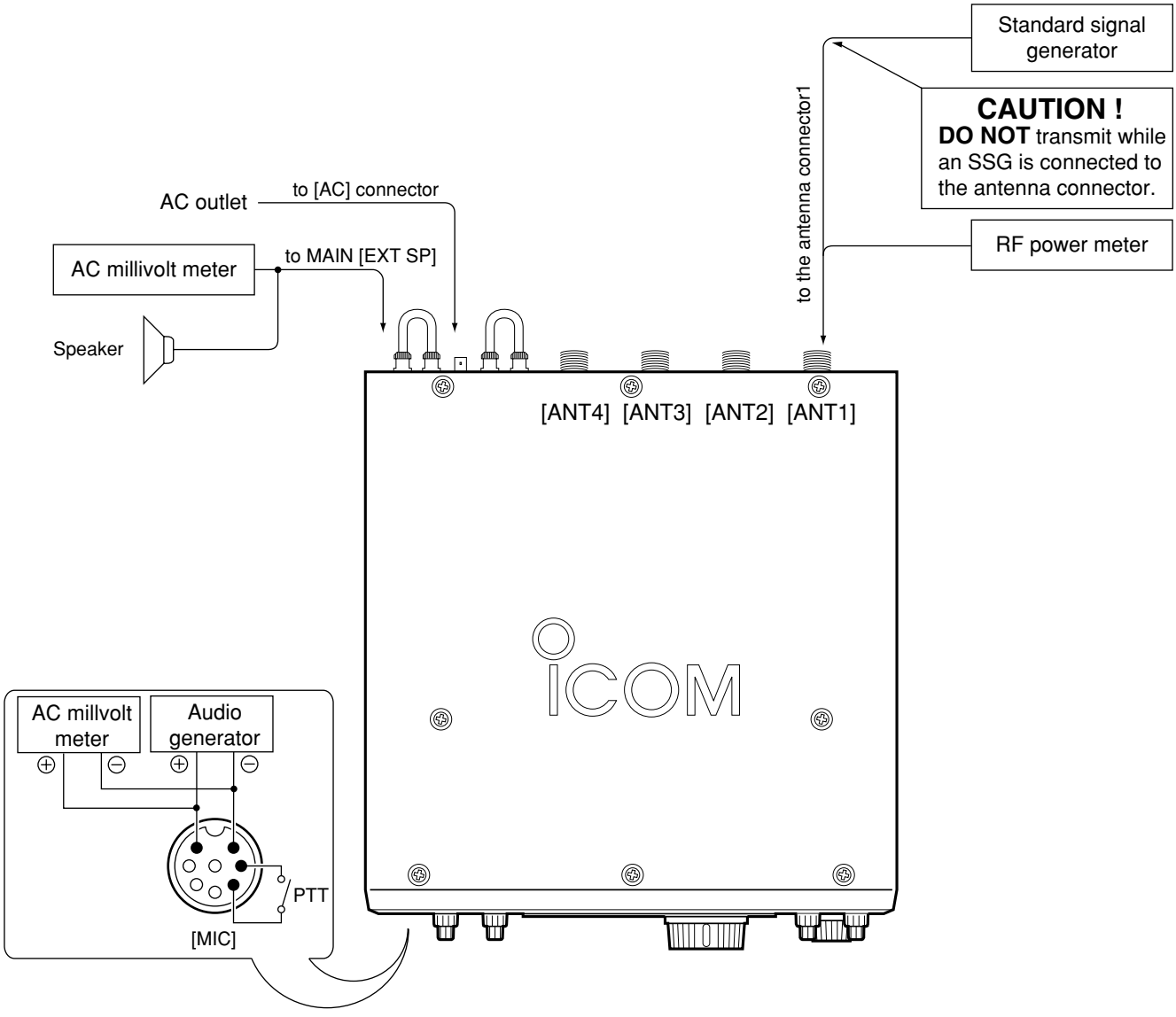

## 4-2 OSC UNIT ADJUSTMENTS

| ADJUSTMENT | | ADJUSTMENT CONDITION | MEASUREMENT | | VALUE | ADJUSTMENT POINT | |
|---|---|---|---|---|---|---|---|
| | | | UNIT | LOCATION | | UNIT | ADJUST |
| REFERENCE OUTPUT | 1 | • Set the OSC unit to the external reference mode on the set mode.<br>• MAIN display frequency : 10.000 MHz<br>• Connect an SSG to J71 on the OSC unit and set as;<br>Frequency : 10.000 MHz<br>Level : 71 mV* (–10 dBm)<br>Modulation : OFF<br>• Terminates J73 with 50 Ω.<br>• Receiving | OSC | Connect an RF voltmeter to J72. | Maximum voltage | OSC | Adjust repeatedly L61, L62 |
| REF IN OUTPUT | 2 | • Receiving | OSC | Connect an RF voltmeter to J72. | 0 dBm ±3.0 dB | | Verify |
| | | • Terminates J72 with 50 Ω.<br>• Receiving | | Connect an RF voltmeter to J73. | 0 dBm ±3.0 dB | | Verify |
| REF OUT OUTPUT | 3 | • Set the OSC unit to the internal reference mode on the set mode.<br>• Receiving | OSC | Connect an RF voltmeter to J71. | –10.0 dBm ±3.0 dB | | Verify |
| | | • Terminates J73 with 50 Ω.<br>• Receiving | | Connect an RF voltmeter to J72. | 0 dBm ±3.0 dB | | Verify |
| | | • Terminates J72 with 50 Ω.<br>• Receiving | | Connect an RF voltmeter to J73. | 0 dBm ±3.0 dB | | Verify |

*This output level of a standard signal generator (SSG) is indicated as SSG's open circuit.

**• OSC UNIT TOP VIEW**

**• LOCATION**

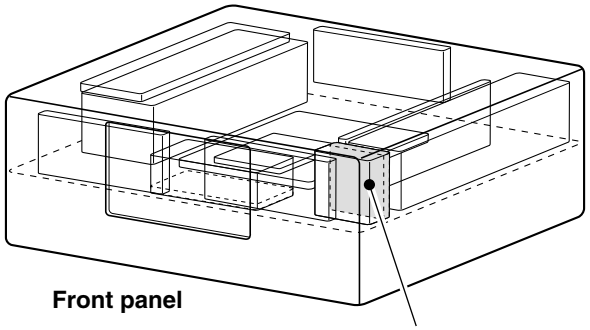


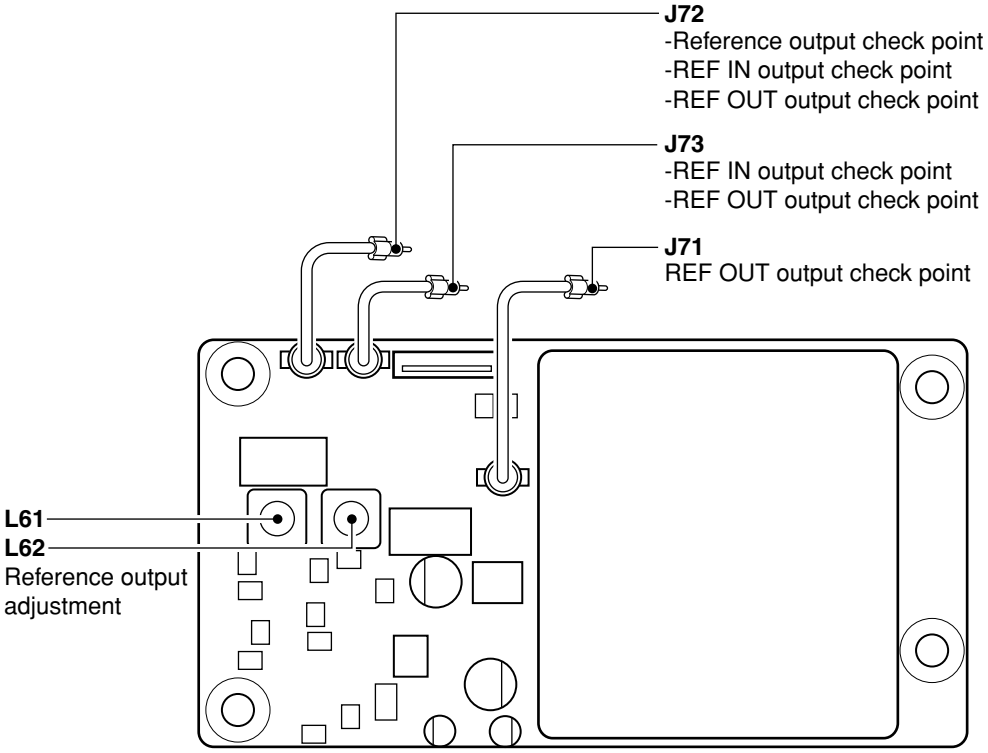

## 4-3 RXPLL-A UNIT ADJUSTMENTS

| ADJUSTMENT | | ADJUSTMENT CONDITION | MEASUREMENT | | VALUE | ADJUSTMENT POINT | |
|---|---|---|---|---|---|---|---|
| | | | UNIT | LOCATION | | UNIT | ADJUST |
| 40M OUTPUT | 1 | • MAIN display frequency : 0.030 MHz<br>• Mode : USB<br>• Receiving | RX PLL-A | Connect an RF voltmeter to CP701 (40 MHz). | Maximum voltage | RX PLL-A | Adjust repeatedly L702, L703 |
| LPL LOCK VOLTAGE | 1 | • MAIN display frequency : 0.030 MHz<br>• Mode : USB<br>• Receiving | RX PLL-A | Connect a DC voltmeter to CP1 (LV1). | 2.0 V ±0.1 V | RX PLL-A | C154 |
| | 2 | • MAIN display frequency : 7.999 MHz<br>• Mode : USB<br>• Receiving | | | Less than 3.0 V | | Verify |
| HPL LOCK VOLTAGE (VCO1) | 1 | • MAIN display frequency : 7.999 MHz<br>• Mode : USB<br>• Receiving | RX PLL-A | Connect a DC voltmeter to CP2 (LV2). | 4.0 V ±0.1 V | RX PLL-A | C222 |
| (VCO2) | 2 | • MAIN display frequency : 14.999 MHz<br>• Mode : USB<br>• Receiving | | | 4.0 V ±0.1 V | | C232 |
| (VCO3) | 3 | • MAIN display frequency : 21.999 MHz<br>• Mode : USB<br>• Receiving | | | 4.0 V ±0.1 V | | C242 |
| (VCO4) | 4 | • MAIN display frequency : 29.999 MHz<br>• Mode : USB<br>• Receiving | | | 4.0 V ±0.1 V | | C252 |
| (VCO5) | 5 | • MAIN display frequency : 44.999 MHz<br>• Mode : USB<br>• Receiving | | | 4.0 V ±0.1 V | | C262 |
| (VCO6) | 6 | • MAIN display frequency : 60.000 MHz<br>• Mode : USB<br>• Receiving | | | 4.0 V ±0.1 V | | C272 |
| (VCO1) | 7 | • MAIN display frequency : 0.030 MHz<br>• Mode : USB<br>• Receiving | RX PLL-A | Connect a DC voltmeter to CP2 (LV2). | 1.2 V–2.0 V | RX PLL-A | Verify |
| (VCO2) | 8 | • MAIN display frequency : 8.000 MHz<br>• Mode : USB<br>• Receiving | | | 1.2 V–2.0 V | | Verify |
| (VCO3) | 9 | • MAIN display frequency : 15.000 MHz<br>• Mode : USB<br>• Receiving | | | 1.2 V–2.0 V | | Verify |
| (VCO4) | 10 | • MAIN display frequency : 22.000 MHz<br>• Mode : USB<br>• Receiving | | | 1.2 V–2.0 V | | Verify |
| (VCO5) | 11 | • MAIN display frequency : 30.000 MHz<br>• Mode : USB<br>• Receiving | | | 1.2 V–2.0 V | | Verify |

**• RXPLL-A UNIT TOP VIEW**

**• LOCATION**

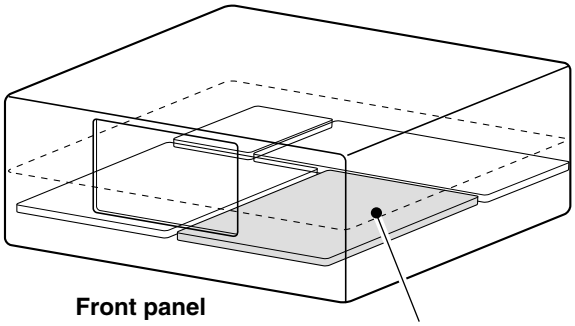


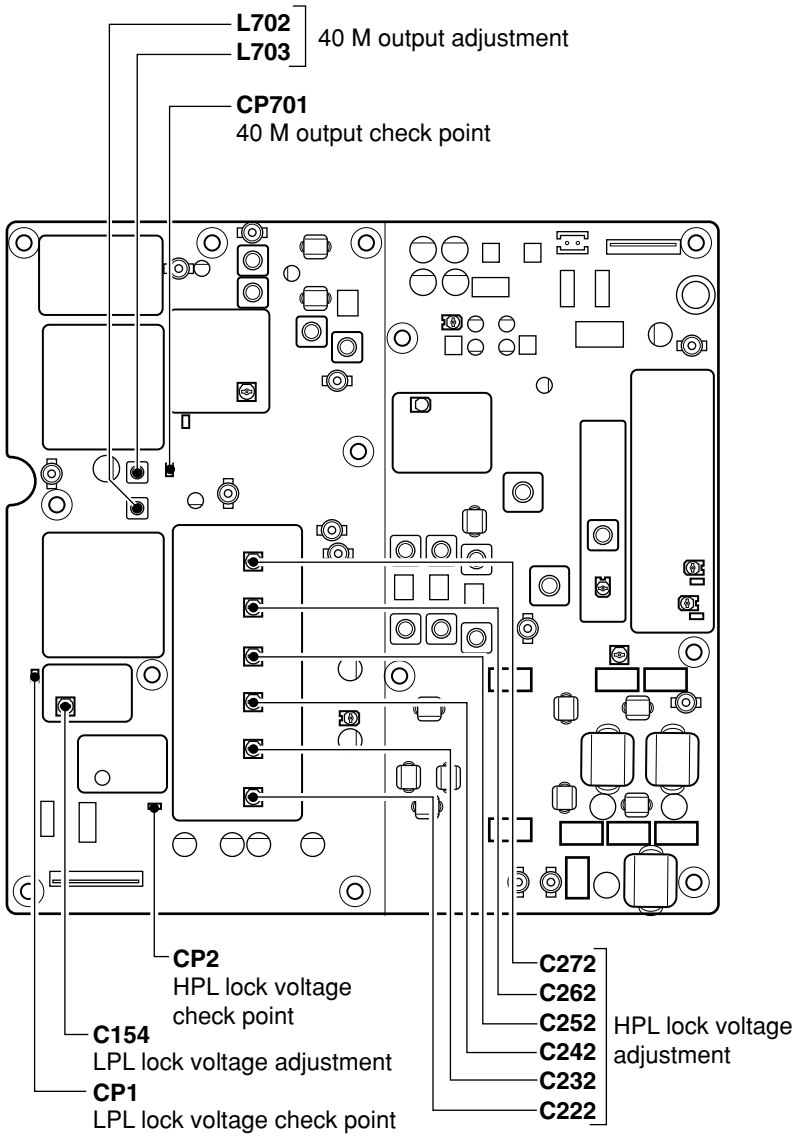

## RXPLL-A UNIT ADJUSTMENTS–Continued

| ADJUSTMENT | | ADJUSTMENT CONDITION | MEASUREMENT | | VALUE | ADJUSTMENT POINT | |
|---|---|---|---|---|---|---|---|
| | | | UNIT | LOCATION | | UNIT | ADJUST |
| HPL LOCK VOLTAGE (VCO6) | 12 | • MAIN display frequency : 45.000 MHz<br>• Mode : USB<br>• Receiving | RX PLL-A | Connect a DC voltmeter to CP2 (LV2). | 1.1 V–2.0 V | RX PLL-A | Verify |
| R1 LO OUTPUT | 1 | • MAIN display frequency : 14.999 MHz<br>• Mode : USB<br>• Receiving | RX PLL-A | Connect an RF voltmeter to J351 (R1LO). | 2.25 dBm ±0.25 dB | RX PLL-A | R357 |
| 2LO LOCK VOLTAGE | 1 | • MAIN display frequency : 14.100 MHz<br>• Mode : USB<br>• Receiving | RX PLL-A | Connect a DC voltmeter to CP3. | 2.0 V ±0.3 V | RX PLL-A | C546 |
| R2 LO OUTPUT | 1 | • MAIN display frequency : 14.100 MHz<br>• Mode : USB<br>• Receiving | RX PLL-A | Connect a spectrum analyzer to J831 (R2LO). | Maximum level (–7 to –16.0 dBm) | RX PLL-A | L801, L834 |
| T2 LO OUTPUT | 1 | • MAIN display frequency : 14.100 MHz<br>• Mode : USB<br>• Receiving | RX PLL-A | Connect a spectrum analyzer to J561 (T2LO). | Maximum level (3.0 dBm ±3.0 dB) | RX PLL-A | Adjust repeatedly L565, L566 |
| RX SENSITIVITY (HF) | 1 | • Pre-set the IC-7800 as the following condition.<br>• MAIN display frequency : 14.150 MHz<br>• Mode : USB<br>• Dualwatch : OFF<br>• MAIN Ant. : ANT1<br>• Pre-amp. 1 : ON<br>• SUB AF : Minimum level<br>• Receiving | RX PLL-A | Connect a DC voltmeter to CP1102. | 4.5 V ±0.1 V | RX PLL-A | R1101 |
| | | | | Connect a DC voltmeter to CP1103. | 4.5 V ±0.1 V | RX PLL-A | R1132 |
| | | | | Perset L1401, L1402, L1403, L1404, L1410 and L1411 as illustrated at right. | 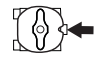 Center position | RX PLL-A | R1228 |
| | | | | | 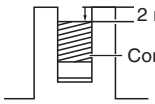  | RX PLL-A | L1401, L1402 |
| | | | | | 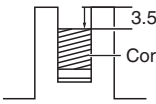  | RX PLL-A | L1403, L1404 |
| | | | | | 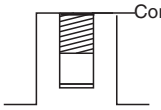  | RX PLL-A | L1410, L1411 |
| | 2 | • MAIN display frequency : 14.1500 MHz<br>• Mode : USB<br>• Connect an SSG to [ANT1] connector and set as;<br>Frequency : 14.1515 MHz<br>Level : 1 µV* (–107 dBm)<br>Modulation : OFF<br>• Receiving | Rear panel | Connect an AC millivolt meter to [EXT SP] jack with 8 Ω load. | Maximum audio level | RX PLL-A | L1408, L1058 |

*This output level of a standard signal generator (SSG) is indicated as SSG's open circuit.

**• RXPLL-A UNIT TOP VIEW**

**• LOCATION**

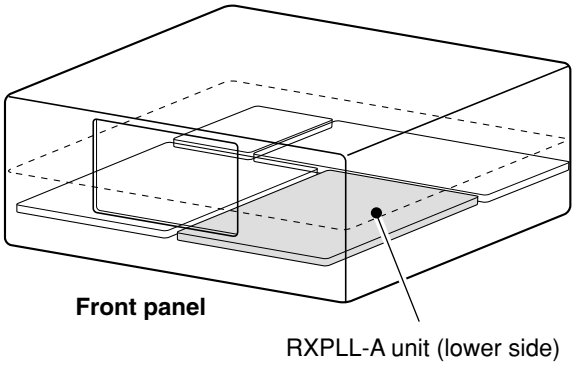


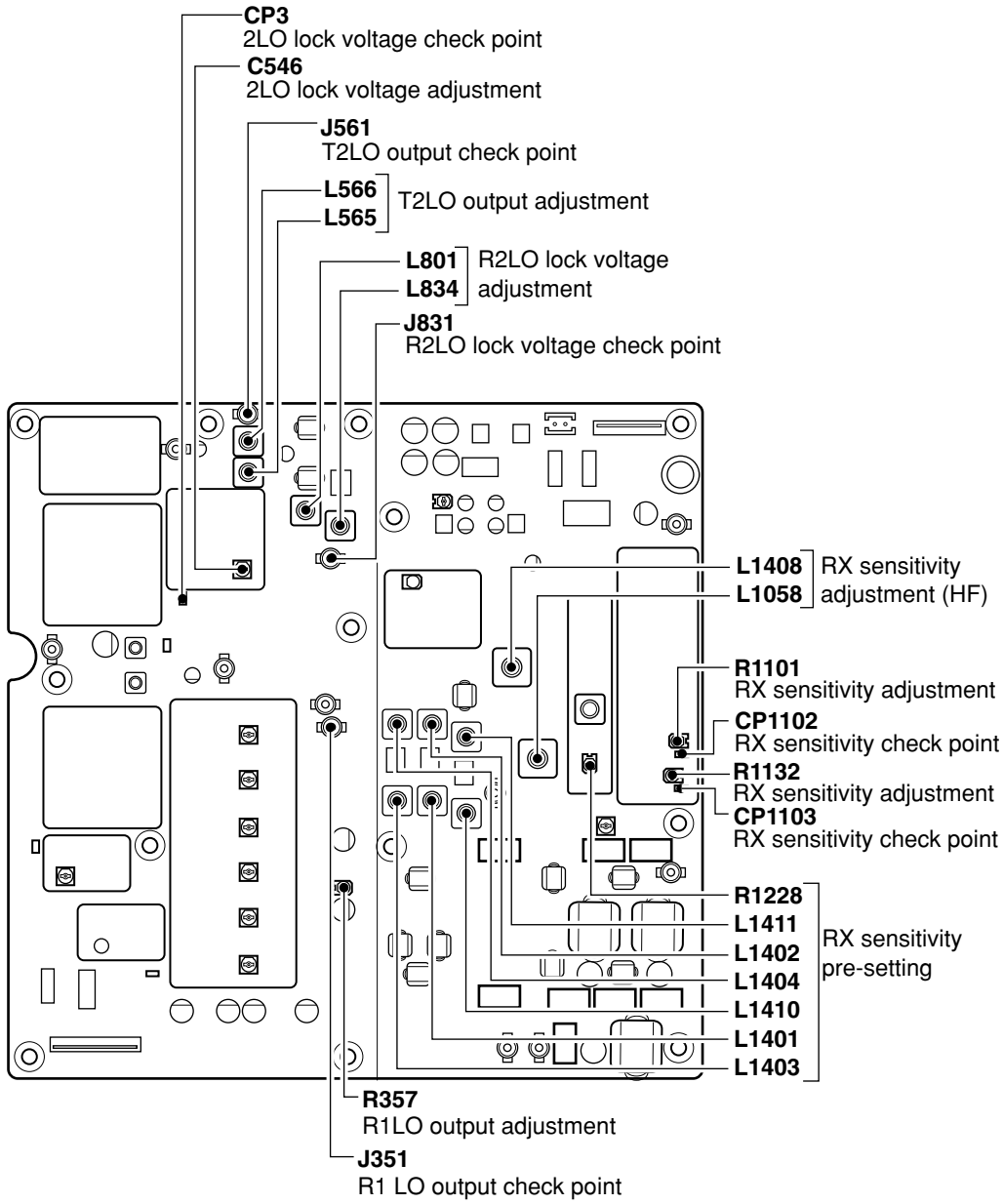

## RXPLL-A UNIT ADJUSTMENTS–Continued

| ADJUSTMENT | | ADJUSTMENT CONDITION | MEASUREMENT | | VALUE | ADJUSTMENT POINT | |
|---|---|---|---|---|---|---|---|
| | | | UNIT | LOCATION | | UNIT | ADJUST |
| IMAGE RESPONSE | 1 | • MAIN display frequency : 14.150 MHz<br>• Mode : USB<br>• Connect an SSG to [ANT1] connector and set as;<br>Frequency : 14.0765 MHz<br>Level : 50 mV* (–13 dBm)<br>Modulation : OFF<br>• Receiving | Rear panel | Connect an AC millivolt meter to [EXT SP] jack with 8 Ω load. | Minimum audio level | RX PLL-A | Adjust repeatedly R1516, C1656 |
| RX SENSITIVITY (50 MHz) | 1 | • MAIN display frequency : 50.020 MHz<br>• Mode : USB<br>• Pre-amp. 2 : ON<br>• Connect an SSG to [ANT1] connector and set as;<br>Frequency : 50.0215 MHz<br>Level : 0.32 µV* (–117 dBm)<br>Modulation : OFF<br>• Receiving | Rear panel | Connect an AC millivolt meter to [EXT SP] jack with 8 Ω load. | Maximum audio level | RX PLL-A | L1222 |
| IF THROUGH (50 MHz) | 1 | • MAIN display frequency : 50.020 MHz<br>• Mode : USB<br>• Connect an SSG to [ANT1] connector and set as;<br>Frequency : 64.455 MHz<br>Level : 50 mV* (–13 dBm)<br>Modulation : OFF<br>• Receiving | Front panel | S-meter | Minimum level | RX PLL-A | C1265 |

*This output level of a standard signal generator (SSG) is indicated as SSG's open circuit.

**• RXPLL-A UNIT TOP VIEW**

**• LOCATION**

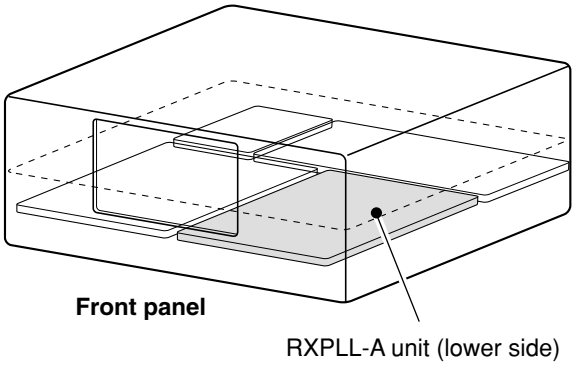


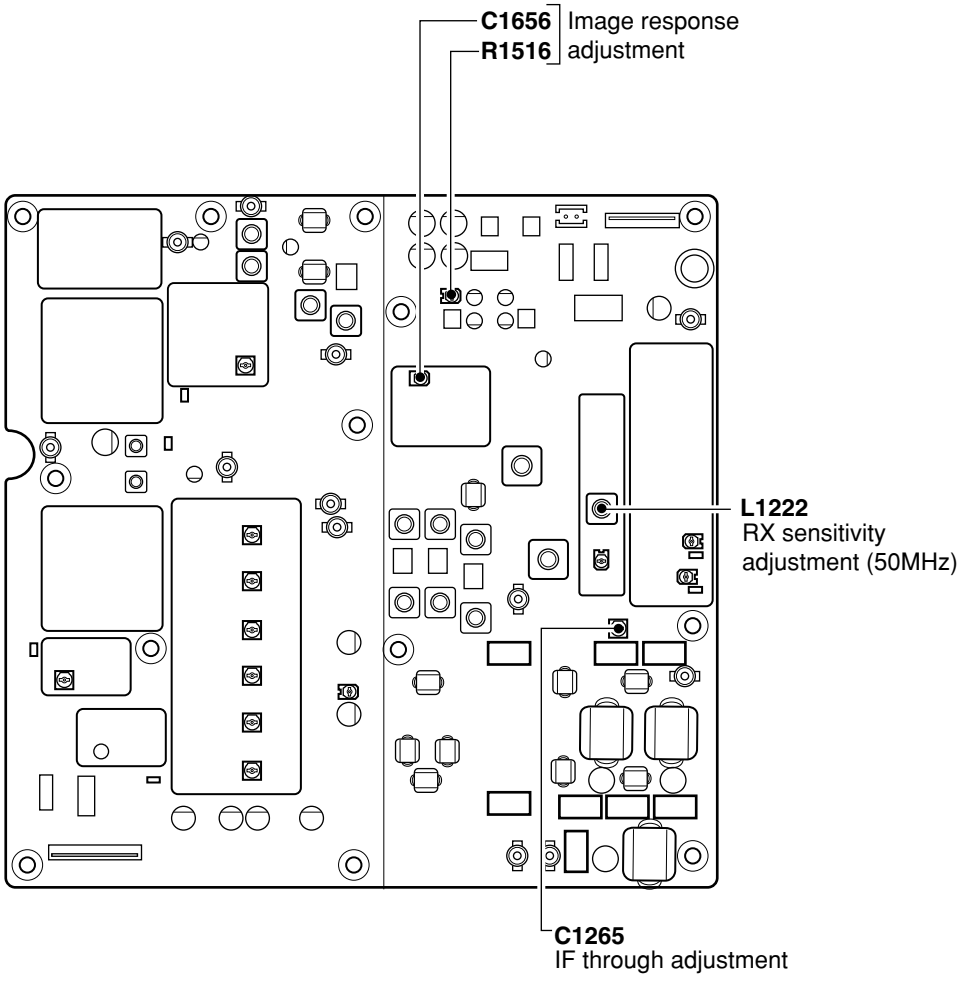

## 4-4 RXPLL-B UNIT ADJUSTMENTS

| ADJUSTMENT | | ADJUSTMENT CONDITION | MEASUREMENT | | VALUE | ADJUSTMENT POINT | |
|---|---|---|---|---|---|---|---|
| | | | UNIT | LOCATION | | UNIT | ADJUST |
| 40M OUTPUT | 1 | • Dualwatch : ON<br>• SUB display frequency : 60.000 MHz<br>• Mode : USB<br>• Receiving | RX PLL-B | Connect an RF voltmeter to CP701 (40 MHz). | Maximum voltage | RX PLL-B | Adjust repeatedly L702, L703 |
| LPL LOCK VOLTAGE | 1 | • SUB display frequency : 60.000 MHz<br>• Mode : USB<br>• Receiving | RX PLL-B | Connect a DC voltmeter to CP1 (LV1). | 2.0 V ±0.1 V | RX PLL-B | C154 |
| | 2 | • SUB display frequency : 1.499 MHz<br>• Mode : USB<br>• Receiving | | | Less than 4.0 V | | Verify |
| HPL LOCK VOLTAGE (VCO1) | 1 | • SUB display frequency : 7.999 MHz<br>• Mode : USB<br>• Receiving | RX PLL-B | Connect a DC voltmeter to CP2 (LV2). | 4.0 V ±0.1 V | RX PLL-B | C222 |
| (VCO2) | 2 | • SUB display frequency : 14.999 MHz<br>• Mode : USB<br>• Receiving | | | 4.0 V ±0.1 V | | C232 |
| (VCO3) | 3 | • SUB display frequency : 21.999 MHz<br>• Mode : USB<br>• Receiving | | | 4.0 V ±0.1 V | | C242 |
| (VCO4) | 4 | • SUB display frequency : 29.999 MHz<br>• Mode : USB<br>• Receiving | | | 4.0 V ±0.1 V | | C252 |
| (VCO5) | 5 | • SUB display frequency : 44.999 MHz<br>• Mode : USB<br>• Receiving | | | 4.0 V ±0.1 V | | C262 |
| (VCO6) | 6 | • SUB display frequency : 60.000 MHz<br>• Mode : USB<br>• Receiving | | | 4.0 V ±0.1 V | | C272 |
| (VCO1) | 7 | • SUB display frequency : 0.030 MHz<br>• Mode : USB<br>• Receiving | RX PLL-B | Connect a DC voltmeter to CP2 (LV2). | 1.2 V–2.0 V | RX PLL-B | Verify |
| (VCO2) | 8 | • SUB display frequency : 8.000 MHz<br>• Mode : USB<br>• Receiving | | | 1.2 V–2.0 V | | Verify |
| (VCO3) | 9 | • SUB display frequency : 15.000 MHz<br>• Mode : USB<br>• Receiving | | | 1.2 V–2.0 V | | Verify |
| (VCO4) | 10 | • SUB display frequency : 22.000 MHz<br>• Mode : USB<br>• Receiving | | | 1.2 V–2.0 V | | Verify |
| (VCO5) | 11 | • SUB display frequency : 30.000 MHz<br>• Mode : USB<br>• Receiving | | | 1.2 V–2.0 V | | Verify |

**• RXPLL-B UNIT TOP VIEW**

**• LOCATION**

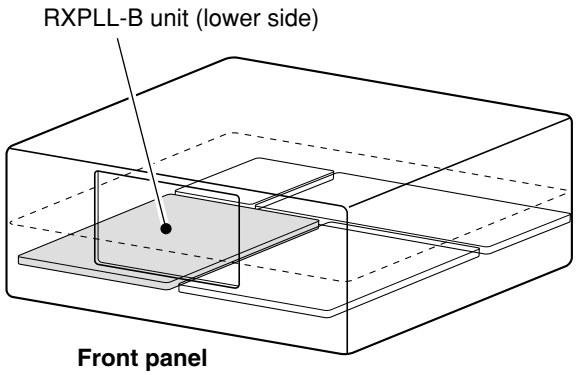


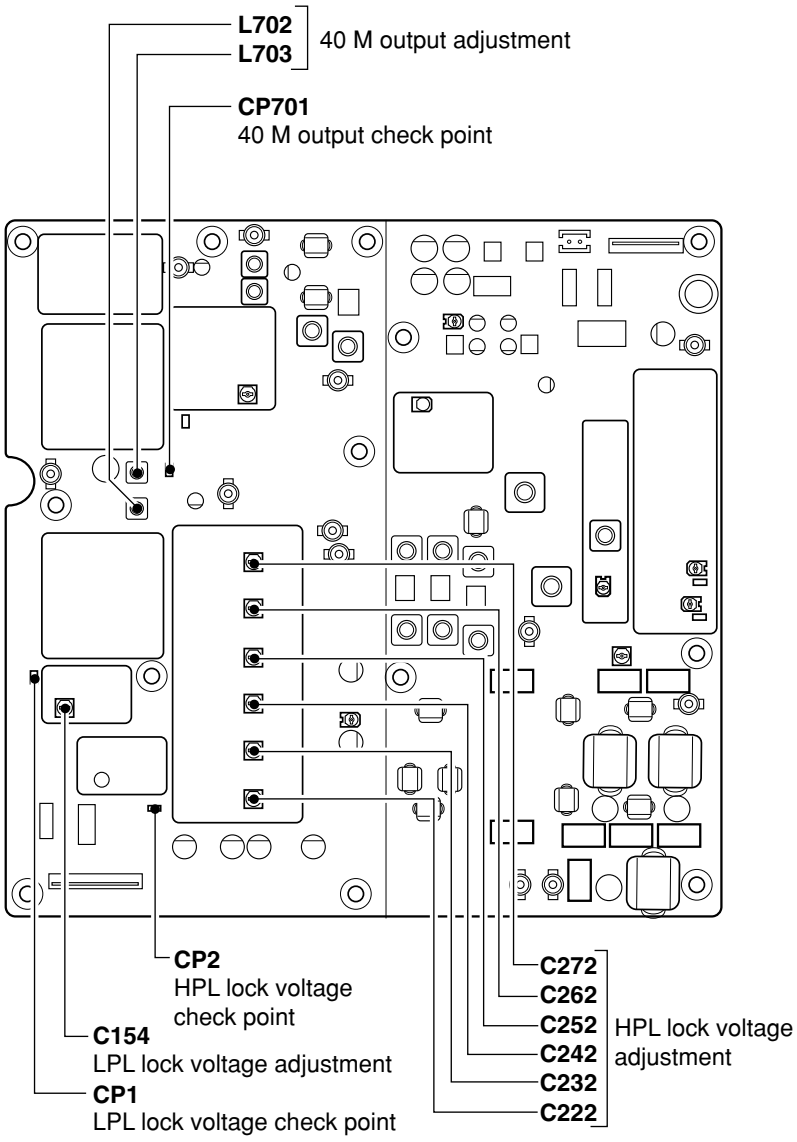

## RXPLL-B UNIT ADJUSTMENTS–Continued

| ADJUSTMENT | | ADJUSTMENT CONDITION | MEASUREMENT | | VALUE | ADJUSTMENT POINT | |
|---|---|---|---|---|---|---|---|
| | | | UNIT | LOCATION | | UNIT | ADJUST |
| HPL LOCK VOLTAGE (VCO6) | 12 | • SUB display frequency : 45.000 MHz<br>• Mode : USB<br>• Receiving | RX PLL-B | Connect a DC voltmeter to CP2 (LV2). | 1.2 V–2.0 V | RX PLL-B | Verify |
| S1 LO OUTPUT | 1 | • SUB display frequency : 14.999 MHz<br>• Mode : USB<br>• Receiving | RX PLL-B | Connect an RF voltmeter to J351 (S1LO). | 2.25 dBm ±0.25 dB | RX PLL-B | R357 |
| 2LO LOCK VOLTAGE | 1 | • SUB display frequency : 14.100 MHz<br>• Mode : USB<br>• Receiving | RX PLL-B | Connect a DC voltmeter to CP3. | 3.0 V ±0.3 V | RX PLL-B | C546 |
| 2LO OUTPUT | 1 | • MAIN display frequency : 14.100 MHz<br>• Mode : USB<br>• Receiving | RX PLL-B | Connect a spectrum analyzer to J561 (2LO). | Maximum level (–9.0 dBm ±3.0 dB) | RX PLL-B | Adjust repeatedly L565, L566 |
| RX SENSITIVITY (HF) | 1 | Pre-set the IC-7800 as the following condition.<br>• SUB display frequency : 14.150 MHz<br>• Mode : USB<br>• Dualwatch : ON<br>• MAIN Ant. : ANT2<br>• SUB Ant. : ANT1<br>• Pre-amp. 1 : ON<br>• MAIN AF : Minimum level<br>• Receiving | RX PLL-B | Connect a DC voltmeter to CP1102. | 4.5 V ±0.1 V | RX PLL-B | R1101 |
| | | | | Connect a DC voltmeter to CP1103. | 4.5 V ±0.1 V | RX PLL-B | R1132 |
| | | | | Per-set L1401, L1402, L1403, L1404, L1405 and L1406 as the illustration at right. | Center position | RX PLL-B | R1228 |
| | | | | | 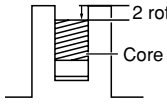  | RX PLL-B | L1401, L1402 |
| | | | | | 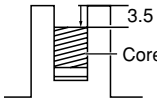  | RX PLL-B | L1403, L1404 |
| | | | | | 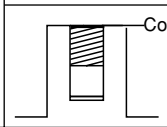  | RX PLL-B | L1410, L1411 |
| | 2 | • SUB display frequency : 14.150 MHz<br>• Mode : USB<br>• Connect an SSG to [ANT1] connector and set as;<br>Frequency : 14.1515 MHz<br>Level : 1 µV* (–107 dBm)<br>Modulation : OFF<br>• Receiving | Rear panel | Connect an AC millivolt meter to [EXT SP] jack with 8 Ω load. | Maximum audio level | RX PLL-B | L1408, L1058 |
| IMAGE RESPONSE | 1 | • SUB display frequency : 14.150 MHz<br>• Mode : USB<br>• Connect an SSG to [ANT1] connector and set as;<br>Frequency : 14.0765 MHz<br>Level : 50 mV* (–13 dBm)<br>Modulation : OFF<br>• Receiving | Rear panel | Connect an AC millivolt meter to [EXT SP] jack with 8 Ω load. | Minimum audio level | RX PLL-B | R1516, C1656 |

*This output level of a standard signal generator (SSG) is indicated as SSG's open circuit.

**• RXPLL-B UNIT TOP VIEW**

**• LOCATION**

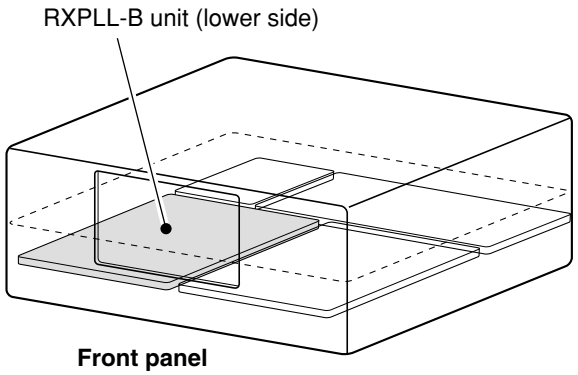


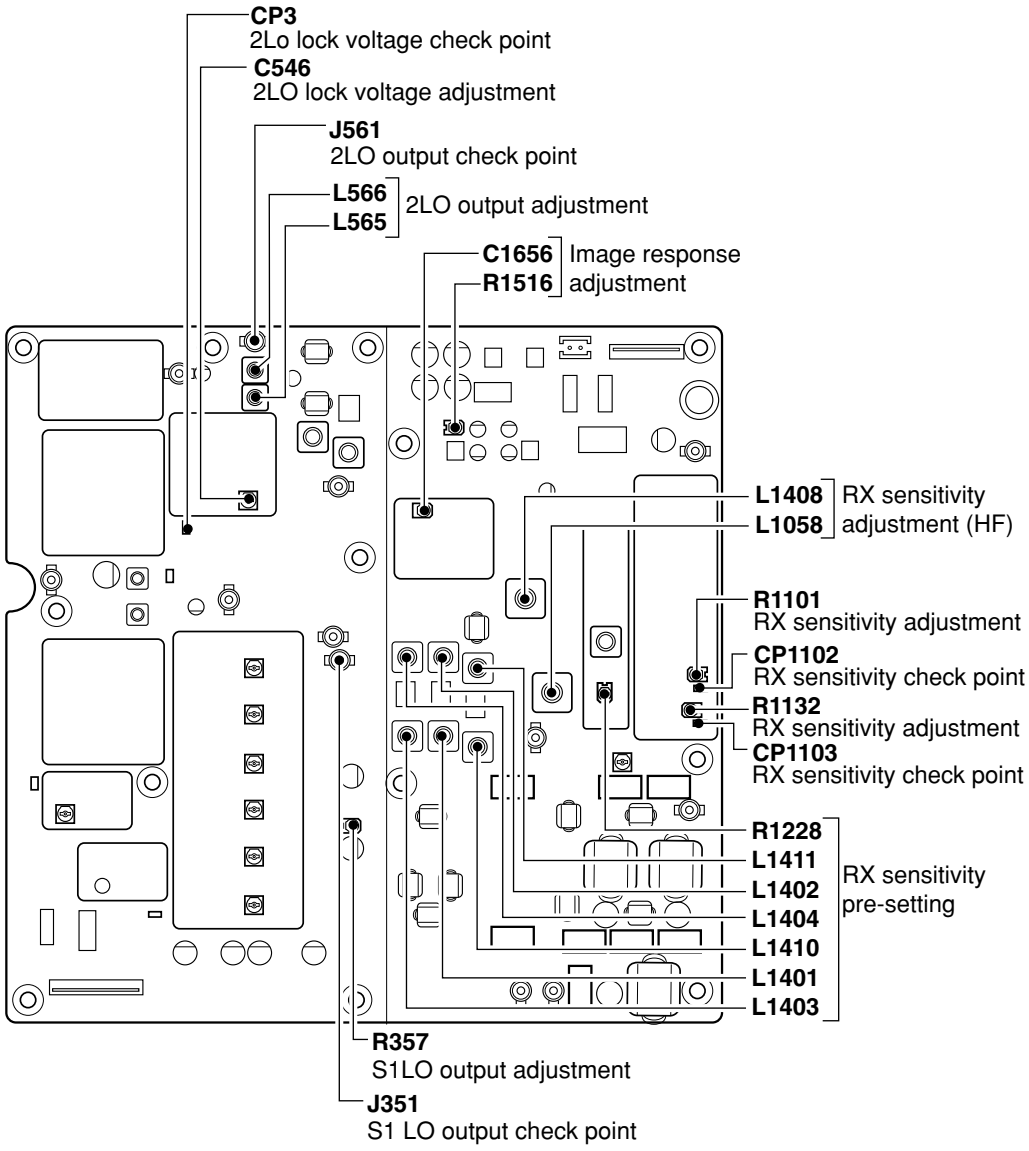

## RXPLL-B UNIT ADJUSTMENTS–Continued

| ADJUSTMENT | | ADJUSTMENT CONDITION | MEASUREMENT | | VALUE | ADJUSTMENT POINT | |
|---|---|---|---|---|---|---|---|
| | | | UNIT | LOCATION | | UNIT | ADJUST |
| RX SENSITIVITY (50 MHz) | 1 | • SUB display frequency : 50.020 MHz<br>• Mode : USB<br>• Pre-amp. 2 : ON<br>• Connect an SSG to [ANT1] connector and set as;<br>Frequency : 50.0215 MHz<br>Level : 0.32 µV* (–117 dBm)<br>Modulation : OFF<br>• Receiving | Rear panel | Connect an AC millivolt meter to [EXT SP] jack with 8 Ω load. | Maximum audio level | RX PLL-B | L1222 |
| IF THROUGH (50 MHz) | 1 | • SUB display frequency : 50.020 MHz<br>• Mode : USB<br>• Connect an SSG to [ANT1] connector and set as;<br>Frequency : 64.555 MHz<br>Level : 50 mV* (–13 dBm)<br>Modulation : OFF<br>• Receiving | Front panel | S-meter | Minimum level | RX PLL-B | C1265 |

*This output level of a standard signal generator (SSG) is indicated as SSG's open circuit.

**• RXPLL-B UNIT TOP VIEW**

**• LOCATION**

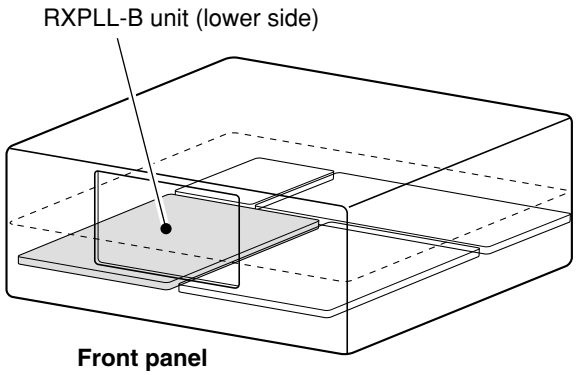


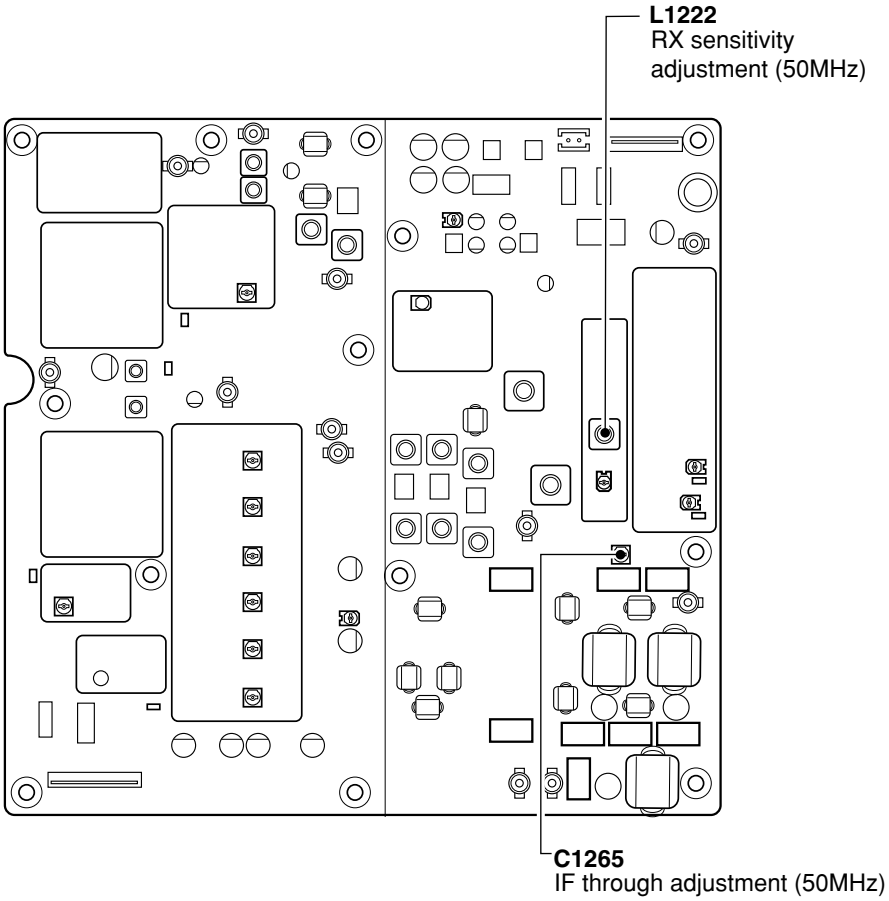

## 4-5 PA200W BOARD ADJUSTMENTS

| ADJUSTMENT | | ADJUSTMENT CONDITION | MEASUREMENT | | VALUE | ADJUSTMENT POINT | |
|---|---|---|---|---|---|---|---|
| | | | UNIT | LOCATION | | UNIT | ADJUST |
| IDLING CURRENT (For driver) | 1 | • Preset R301, R407 and R410 on the PA200W unit to max. CCW.*<br>• [MIC] gain : max. CCW*<br>• Main display frequency : 14.100 MHz<br>• Mode : USB<br>• Apply no audio signals to [MIC] connector.<br>• Transmitting | PA200W | Connect a DC ammeter between W1 and EP501. | 1.0 A higher from the previous value of the adjustment. | PA200W | R301 |
| (For final amplifier) | 2 | | | | 1.0 A higher from the previous value of the adjustment. | | R407, R425 |
| | 3 | | | | 1.0 A higher from the previous value of the adjustment. | | R410, R426 |

*CCW: Counter clockwise

**• PA200W BOARD TOP VIEW**

**• LOCATION**

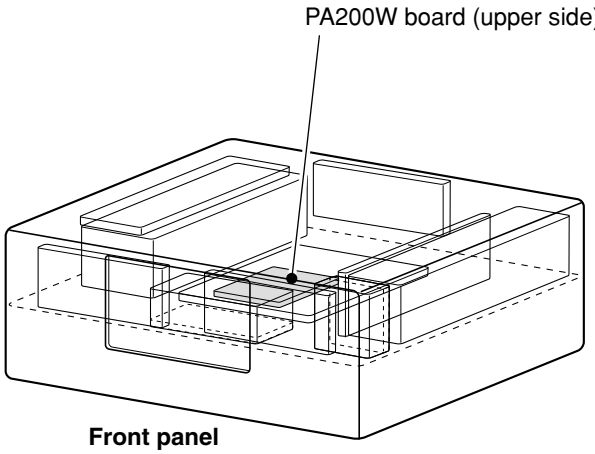


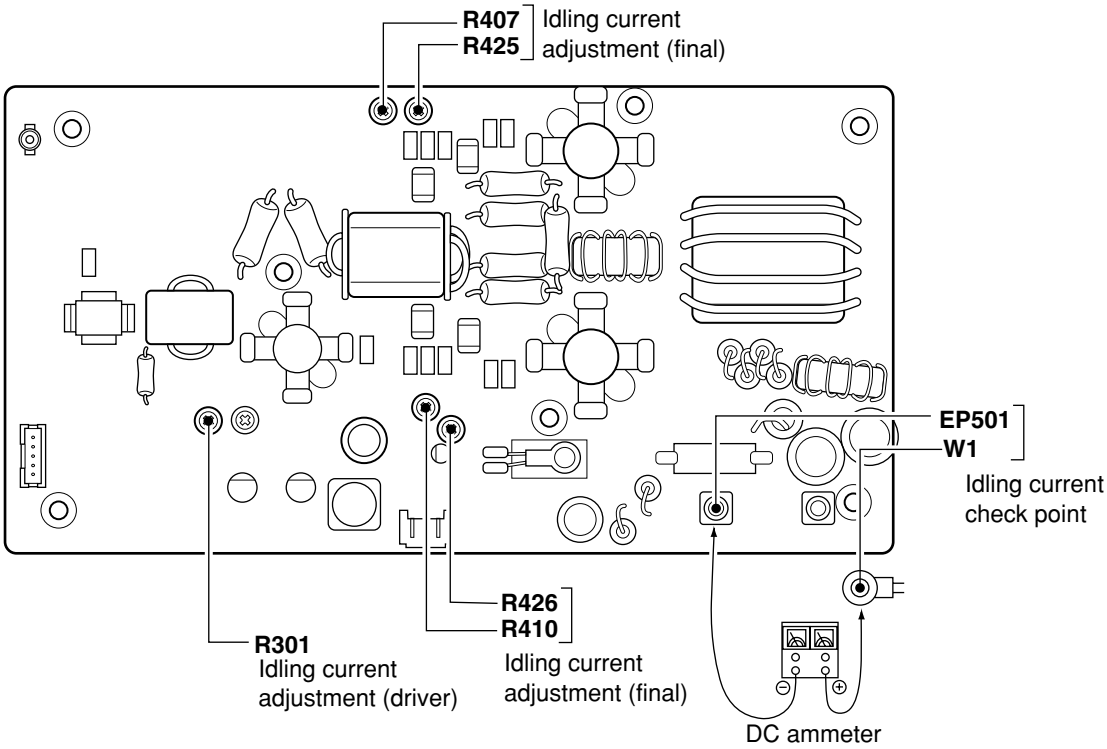

## 4-6 TUNER ADJUSTMENT

| ADJUSTMENT | | ADJUSTMENT CONDITION | MEASUREMENT | | VALUE | ADJUSTMENT POINT | |
|---|---|---|---|---|---|---|---|
| | | | UNIT | LOCATION | | UNIT | ADJUST |
| SWR DETECTOR | 1 | • Main display frequency : 24.950 MHz<br>• Mode : FM<br>• [RF POWER] : Max. CW (200W)<br>• [TUNER] : Through<br>• APC : OFF<br>• Connect a 50 Ω dummy load to [ANT1] connector.<br>• Transmitting | CTRL | Connect a DC voltmeter or oscilloscope to CP101 (REF). | Minimum voltage | CTRL | C104 |
| | | **ADJUSTMENT CONDITION** | **DISPLAY** | | **OPERATION** | | |
| TUNER REFERENCE | 1 | • Enter the tuner adjustment mode:<br>① Turn power OFF.<br>② Terminate [REMOTE] jack with a 2-conductor 3.5(d) mm mini-plug.<br>③ While pushing [M.SCOPE] and [EXIT/SET], turn power ON. | TUNER-ADJUST MODE | | Push [F-7 (START)] to start tuning. | | |
| | 2 | | -- TUNER --<br>Adjusting Now | | Verify the display shows “Adjusting Now”. | | |
| | 3 | | -- TUNER --<br>OK | | Verify the display shows “OK”. | | |

**• CTRL BOARD TOP VIEW**

**• LOCATION**

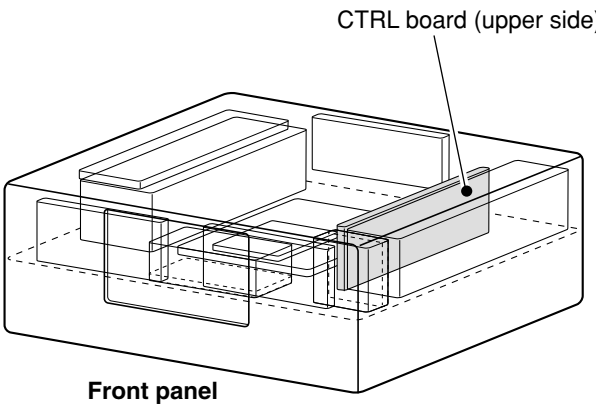


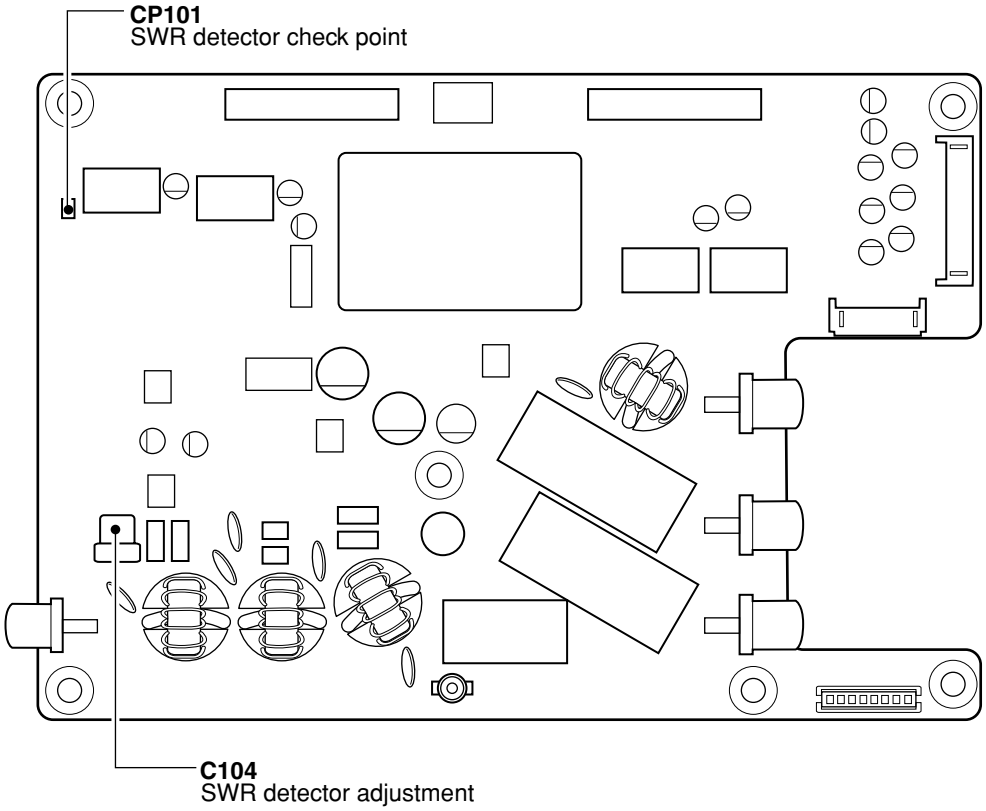

## 4-7 MAIN UNIT ADJUSTMENTS

| ADJUSTMENT | | ADJUSTMENT CONDITION | MEASUREMENT | | VALUE | ADJUSTMENT POINT | |
|---|---|---|---|---|---|---|---|
| | | | UNIT | LOCATION | | UNIT | ADJUST |
| MAXIMUM OUTPUT POWER | 1 | • Turn the power OFF<br>• Perform the all reset operation; push and hold [F-INP] and [MW], then power ON.<br>**NOTE:** Save the memory contents and set mode setting conditions into the CF memory card is recommented.<br>• Preset R93 to 3 o'clock position.<br>• Receiving | MAIN | Connect a digital multimeter or oscilloscope to CP82. | 0.5 V ±0.2 V | MAIN | R69 |
| | 2 | • Connect an audio generator to [MIC] connector and set as;<br>Frequency : 1.5 kHz<br>Level : 1 mV<br>• Transmitting | Rear panel | Connect an RF power meter to [ANT1] connector. | Maximum output power | MAIN | Adjust in sequence repeatedly L505, C576, L512 |
| RESIDUAL AM | 1 | • Mode : FM<br>• Connect an audio generator to [MIC] connector and set as;<br>Frequency : 1.0 kHz<br>Level : 10 mV<br>• Transmitting | Rear panel | Connect an RF power meter to [ANT1] connector. | Minimum level difference between an audio generator is ON and OFF. | MAIN | C576 |
| TX TOTAL GAIN | 1 | • MAIN display frequency : 14.100 MHz<br>• Mode : USB<br>• [MIC] gain : 12 o'clock position<br>• Connect an audio generator to [MIC] connector and set as;<br>Frequency : 1.5 kHz<br>Level : 1 mV<br>• Transmitting | Rear panel | Connect an RF power meter to [ANT1] connector. | 130 W | MAIN | R538 |
| HIGH POWER (HF) | 1 | • MAIN display frequency : 14.100 MHz<br>• Mode : RTTY<br>• Transmitting | Rear panel | Connect an RF power meter to [ANT1] connector. | 200 W | MAIN | R81 |
| (50 MHz) | 2 | • MAIN display frequency : 50.100 MHz<br>• Mode : RTTY<br>• Transmitting | | | 200 W | | R79 |
| AM CARRIER POWER | 1 | • MAIN display frequency : 14.100 MHz<br>• Mode : AM<br>• Apply no audio signals to [MIC] connector.<br>• Transmitting | Rear panel | Connect an RF power meter to [ANT1] connector. | 55 W | MAIN | R82 |
| Id-APC | 1 | • MAIN display frequency : 14.100 MHz<br>• Mode : RTTY<br>• Connect CP81 to GND.<br>• Preset R93 to 90˚ CCW.*<br>• Transmitting | PA | Connect a DC ammeter between W1 and EP501. | 12 A | MAIN | R93 |

*CCW: Counter clockwise

## • PA200W BOARD TOP VIEW

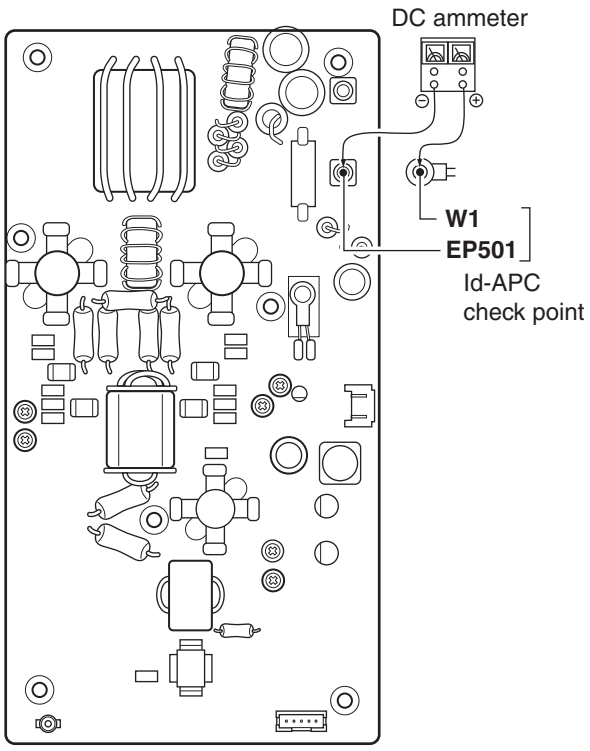


## • LOCATION

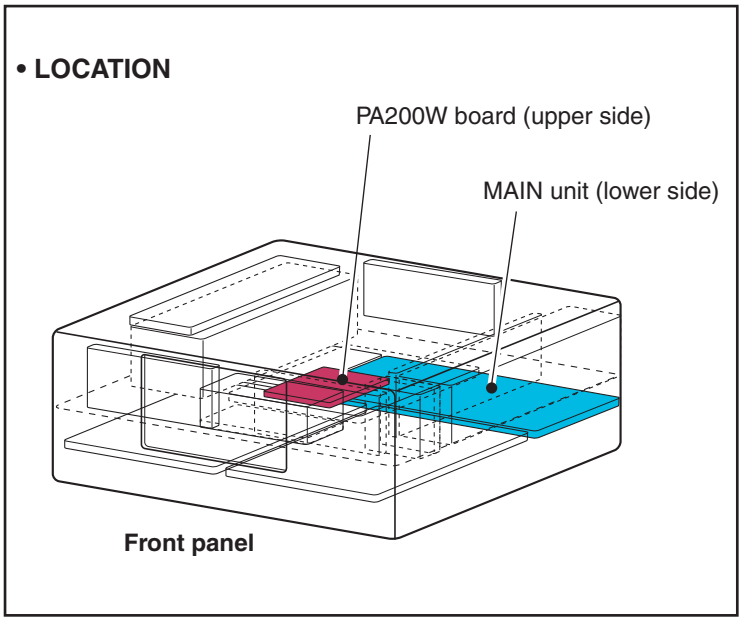


## • MAIN UNIT TOP VIEW

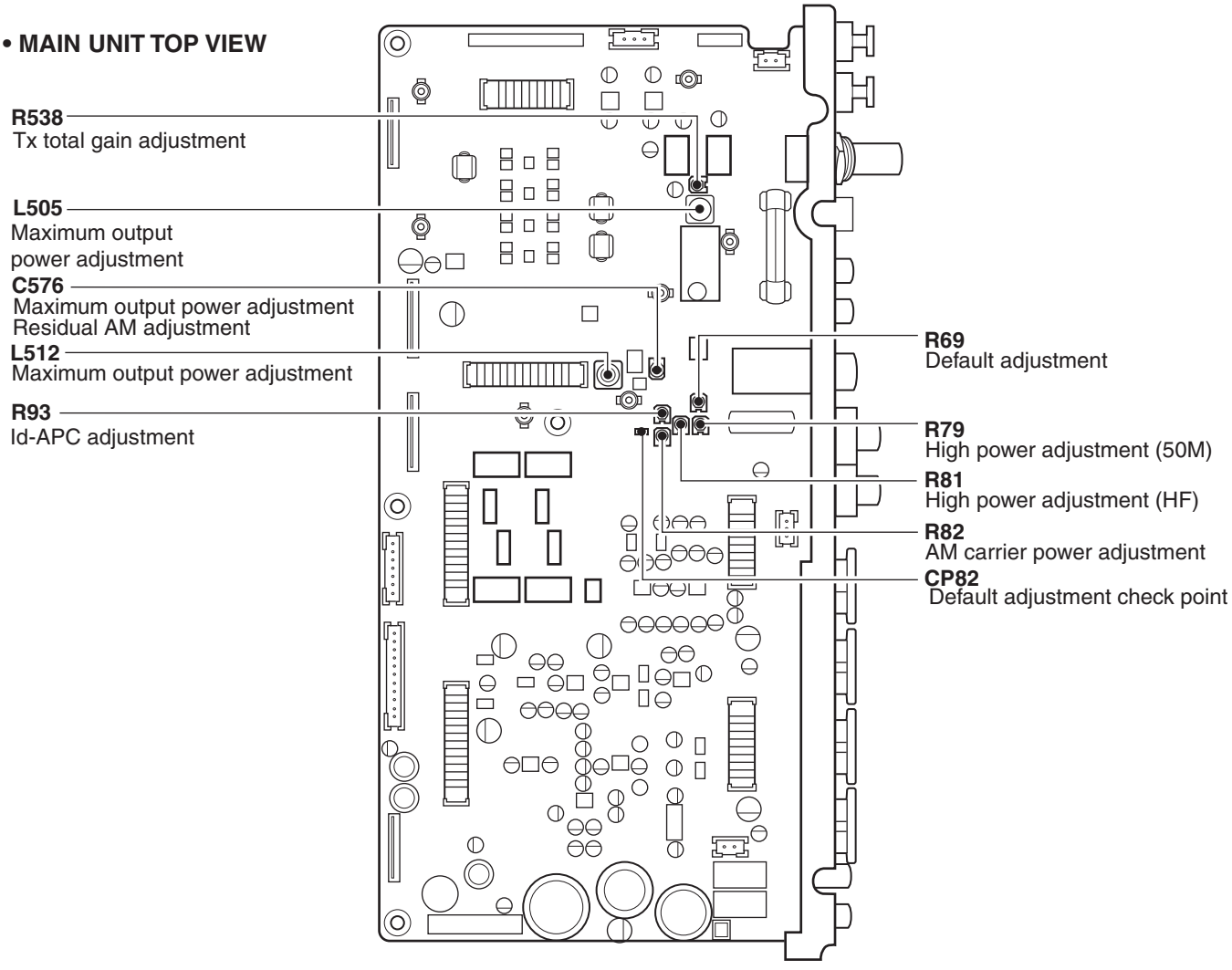

## 4-8 SCOPE UNIT ADJUSTMENTS

| ADJUSTMENT | | ADJUSTMENT CONDITION | MEASUREMENT | | VALUE | ADJUSTMENT POINT | |
|---|---|---|---|---|---|---|---|
| | | | UNIT | LOCATION | | UNIT | ADJUST |
| S3 LO LOCK VOLTAGE | 1 | Pre-set the IC-7800 as the following condition.<br>• MAIN display frequency : 14.200 MHz<br>• Mode : CW<br>• Dualwatch : OFF<br>• Pre-amp. : OFF<br>• Attenuator : OFF<br>• Scope : ON<br>• Scope attenuator: OFF<br>• Span : ±25 kHz<br>• Receiving | SCOPE | Connect a digital voltmeter to CP801. | 2.5 V | SCOPE | C824 |
| SCOPE | 1 | • Connect an SSG to [ANT1] connector and set as;<br>Frequency : 14.200 MHz<br>Level : 500 µV* (–53 dBm)<br>Modulation: OFF<br>• Receiving | Front panel | Scope wave on the LCD. | Maximum wave form | SCOPE | Adjust in sequence L203, L202, L201, L5, L6, C41, and repeatedly adjust L5, L6 and C41 in sequence. |
| | 2 | • Connect an SSG to J1 and set as;<br>Frequency : 71.715 MHz<br>Level : 100 mV* (–7 dBm)<br>Modulation: OFF<br>• Receiving | | | Minimum wave form | | C41 |
| | 3 | • Connect an SSG to [ANT1] connector and set as;<br>Frequency : 14.200 MHz<br>Level : 500 µV* (–53 dBm)<br>Modulation: OFF<br>• Receiving | | | Maximum wave form | | Adjust L5, L6, repeatedly. |
| SCOPE GAIN | 1 | • MAIN display frequency : 14.200 MHz<br>• Mode : CW<br>• Connect an SSG to [ANT1] connector and set as;<br>Frequency : 14.200 MHz<br>Level : 500 µV* (–53 dBm)<br>Modulation: OFF<br>• Receiving | Front panel | Scope wave on the LCD. | Set peak of scope wave form to 6 scales in the scope screen<br> 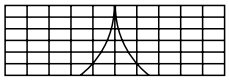 | SCOPE | R416 |
| SCOPE ATTENUATOR | 1 | • MAIN display frequency : 14.200 MHz<br>• Mode : CW<br>• Scope attenuator: 30 dB<br>• Connect an SSG to [ANT1] connector and set as;<br>Frequency : 14.200 MHz<br>Level : 500 µV* (–53 dBm)<br>Modulation: OFF<br>• Receiving | Front panel | Scope wave on the LCD. | Set peak of scope wave form to 3 scales in the scope screen.<br> 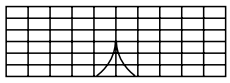 | SCOPE | R11 |

*This output level of a standard signal generator (SSG) is indicated as SSG's open circuit.

**• SCOPE UNIT TOP VIEW**

**• LOCATION**

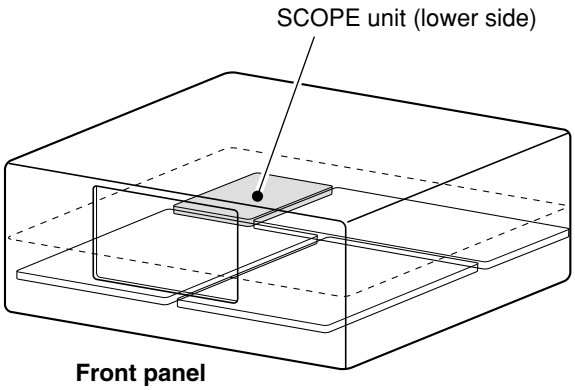


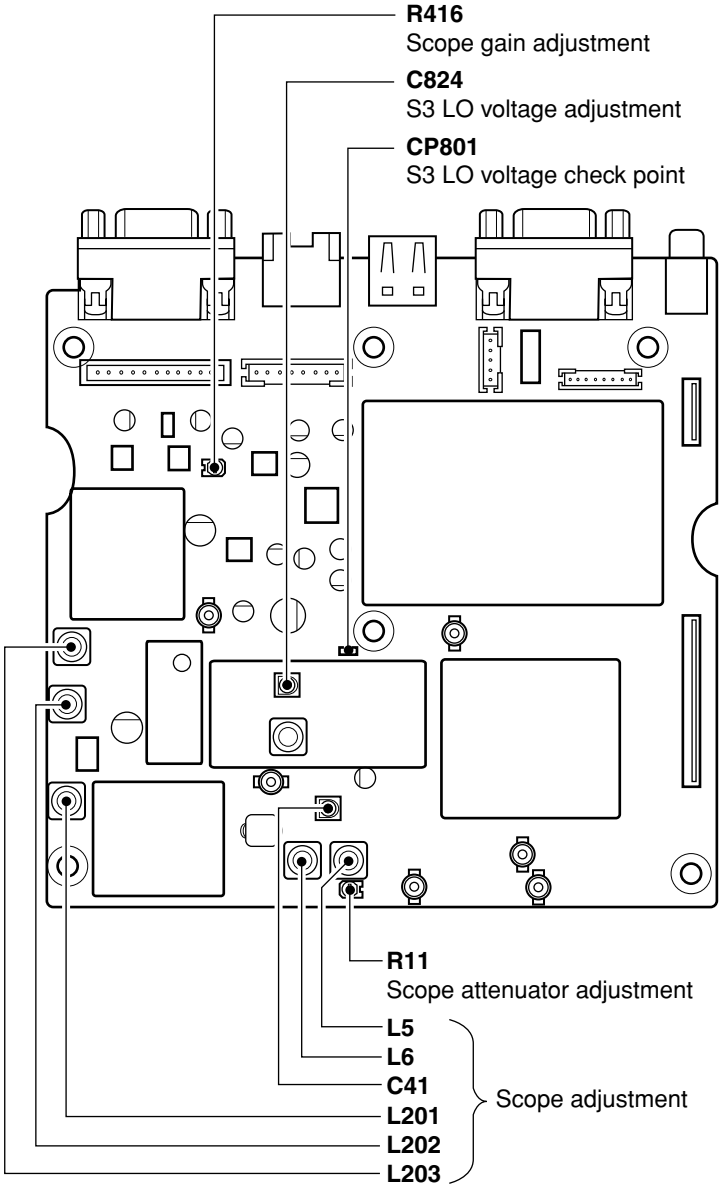

## 4-9 SOFTWARE ADJUSTMENTS

| ADJUSTMENT | | ADJUSTMENT CONDITION | DISPLAY | OPERATION |
|---|---|---|---|---|
| ENTERING ADJUSTMENT MODE | 1 | • Enter the adjustment mode:<br>① Turn power OFF.<br>② Terminate [REMOTE] jack with a 2-conductor 3.5(d) mm mini-plug.<br>③ While pushing [SSB] and [CW], turn power ON. | ADJUST MODE | Push [F-2 (REF)], [F-3 (TX)] or [F-4 (RX)] to select each adjustment mode.<br>Once entering adjustment mode, use [F-1 (▲)] to return items, [F-2 (▼)] to skip items, or [F-3 (EXIT)] to return the opening screen. |
| | | **CAUTION:**<br>**NEVER** push [F-3 (TX)] when an SSG is connected to the transceiver. Because transceiver automatically transmits when [F-3 (TX)] is pushed. | | |
| HF PO METER | 1 | • Connect an audio generator to [MIC] connector and set as;<br>Frequency : 1.5 kHz<br>Level : 10 mV<br>• Connect an RF power meter to [ANT1] connector.<br>• Connect a 100 Ω dummy load to [ANT2] connector.<br>• Push [F-3 (TX)] to enter the TX adjustment mode. | POWER HF/50M 0W | Push [F-7 (SET)] to store the "0 W" meter indication into memory, and selects the next adjustment item. |
| | 2 | | POWER HF 10W | Rotate [MAIN DIAL] to set the RF output power become 10 W.<br>Push [F-7 (SET)] to set 10 W power meter indication and selects the next adjustment item. |
| | 3 | | POWER HF 50W | Rotate [MAIN DIAL] to set the RF output power become 50 W.<br>Push [F-7 (SET)] to set 50 W power meter indication and selects the next adjustment item. |
| | 4 | | POWER HF 100W | Rotate [MAIN DIAL] to set the RF output power become 100 W.<br>Push [F-7 (SET)] to set 100 W power meter indication and selects the next adjustment item. |
| | 5 | | POWER HF 150W | Rotate [MAIN DIAL] to set the RF output power become 150 W.<br>Push [F-7 (SET)] to set 150 W power meter indication and selects the next adjustment item. |
| | 6 | | POWER HF 200W | Rotate [MAIN DIAL] to set the RF output power become 195 W.<br>Push [F-7 (SET)] to set 200 W power meter indication and selects the next adjustment item. |
| 50 MHz PO METER | 1 | | POWER 50M 10W | Rotate [MAIN DIAL] to set the RF output power become 10 W.<br>Push [F-7 (SET)] to set 10 W power meter indication and selects the next adjustment item. |
| | 2 | | POWER 50M 50W | Rotate [MAIN DIAL] to set the RF output power become 50 W.<br>Push [F-7 (SET)] to set 50 W power meter indication and selects the next adjustment item. |
| | 3 | | POWER 50M 100W | Rotate [MAIN DIAL] to set the RF output power become 100 W.<br>Push [F-7 (SET)] to set 100 W power meter indication and selects the next adjustment item. |
| | 4 | | POWER 50M 150W | Rotate [MAIN DIAL] to set the RF output power become 150 W.<br>Push [F-7 (SET)] to set 150 W power meter indication and move to the next step. |
| | 5 | | POWER 50M 200W | Rotate [MAIN DIAL] to set the RF output power become 195 W.<br>Push [F-7 (SET)] to set 200 W power meter indication and selects the next adjustment item. |
| RESERVE POWER SET | 1 | | RESERVE POWER SET | Push [F-7 (SET)] to memorize the setting, and selects the next adjustment item. |
| POWER SET (power down) | 1 | | Power for Power Down HF/50M | Set the RF output power to 100 W with [MAIN DIAL].<br>Push [F-7 (SET)] to set the RF power level and selects the next adjustment item. |
| ALC METER | 1 | | ALC | Push [F-7 (SET)] to set the ALC meter and selects the next adjustment item. |

## SOFTWARE ADJUSTMENTS–Continued

| ADJUSTMENT | | ADJUSTMENT CONDITION | DISPLAY | OPERATION |
|---|---|---|---|---|
| DRIVE LEVEL | 1 | • Connect an audio generator to [MIC] connector and set as;<br>Frequency : 1.5 kHz<br>Level : 10 mV<br>• Connect an RF power meter to [ANT1] connector.<br>• Connect a 100 Ω dummy load to [ANT2] connector. | DRIVE | Push [F-7 (SET)] to set the DRIVE level and selects the next adjustment item. |
| Vd METER | 1 | | Vd48V | Push [F-7 (SET)] to set the Vd meter indication and selects the next adjustment item. |
| Id METER | 1 | | Id 0A | Push [F-7 (SET)] to set the 0 A meter indication and selects the next adjustment item. |
| | 2 | | Id 5A | Rotate [MAIN DIAL] to set the driving current become 5 A.<br>Push [F-7 (SET)] to set the 5 A meter indication and selects the next adjustment item |
| | 3 | | Id 10A | Rotate [MAIN DIAL] to set the driving current become 10 A.<br>Push [F-7 (SET)] to set the 10 A meter indication and selects the next adjustment item |
| SWR METER | 1 | | SWR | Push [F-7 (SET)] to set the SWR meter indication and return to the opening screen. |
| TOTAL GAIN | 1 | • Push [F4 (RX)] to enter the RX adjustment mode.<br>• Connect an SSG to [ANT1] connector and set as;<br>Frequency : 14.1515 MHz<br>Level : 1 mV* (–47 dBm)<br>Modulation : OFF<br>• Connect an AC millivolt meter to [SP] jack with an 8 Ω load. | Total Gain A HF PRE OFF | Rotate [MAIN DIAL] to set 30dB of AF level difference between 1 mV and no signal input from the SSG.<br>Push [F-7 (SET)] to set the HF A total gain and selects the next adjustment item. |
| | 2 | | Total Gain A HF PRE ON | Rotate [MAIN DIAL] to set 30dB of AF level difference between 1 mV and no signal input from the SSG.<br>Push [F-7 (SET)] to set the HF A total gain and selects the next adjustment item. |
| | 3 | • Set an SSG as;<br>Frequency : 50.1515 MHz<br>Level : 1 mV* (–47 dBm) | Total Gain A 50M PRE OFF | Rotate [MAIN DIAL] to set 30dB of AF level difference between 1 mV and no signal input from the SSG.<br>Push [F-7 (SET)] to set the 50 M A total gain and selects the next adjustment item. |
| | 4 | | Total Gain A 50M PRE ON | Rotate [MAIN DIAL] to set 30dB of AF level difference between 1 mV and no signal input from the SSG.<br>Push [F-7 (SET)] to set the 50 M A total gain and selects the next adjustment item. |
| | 5 | • Set an SSG as;<br>Frequency : 14.1515 MHz<br>Level : 1 mV* (–47 dBm) | Total Gain B HF PRE OFF | Rotate [MAIN DIAL] to set 30dB of AF level difference between 1 mV and no signal input from the SSG.<br>Push [F-7 (SET)] to set the HF B total gain and selects the next adjustment item. |
| | 6 | | Total Gain B HF PRE ON | Rotate [MAIN DIAL] to set 30dB of AF level difference between 1 mV and no signal input from the SSG.<br>Push [F-7 (SET)] to set the HF B total gain and selects the next adjustment item. |
| | 7 | • Set an SSG as;<br>Frequency : 50.1515 MHz<br>Level : 1 mV* (–47 dBm) | Total Gain B 50M PRE OFF | Rotate [MAIN DIAL] to set 30dB of AF level difference between 1 mV and no signal input from the SSG.<br>Push [F-7 (SET)] to set the 50 M B total gain and selects the next adjustment item. |
| | 8 | | Total Gain B 50M PRE ON | Rotate [MAIN DIAL] to set 30dB of AF level difference between 1 mV and no signal input from the SSG.<br>Push [F-7 (SET)] to set the 50 M B total gain and selects the next adjustment item. |

*This output level of a standard signal generator (SSG) is indicated as SSG's open circuit.

## SOFTWARE ADJUSTMENTS–Continued

| ADJUSTMENT | | ADJUSTMENT CONDITION | DISPLAY | OPERATION |
|---|---|---|---|---|
| EXTERNAL AGC | 1 | • Connect an SSG to [ANT1] connector and set as;<br>Frequency : 14.1515 MHz<br>Level : 3.2 mV* (–37 dBm)<br>Modulation : OFF | AGC(RX-DSP)A | Push [F-7 (SET)] to set the external AGC level and selects the next adjustment item. |
| | 2 | | AGC(RX-DSP)B | Push [F-7 (SET)] to set the external AGC level and selects the next adjustment item. |
| HF S-METER | 1 | • Set the SSG as;<br>Frequency : 14.1515 MHz<br>Level : OFF | HF S0 LEVEL | • Push [F-7 (SET)] to set the HF S0 meter indication and selects the next adjustment item.<br>**NEVER** change the SSG output level until 2 short beeps are sound. |
| | 2 | • Set the SSG as;<br>Level : 50 µV* (–73 dBm) | HF S9 LEVEL | • Push [F-7 (SET)] to set the HF S9 meter indication and selects the next adjustment item.<br>**NEVER** change the SSG output level until 2 short beeps are sound. |
| | 3 | • Set the SSG as:<br>Level : 50 mV* (–13 dBm) | S9+60 LEVEL | • Push [F-7 (SET)] to set the HF S9+60 meter indication and selects the next adjustment item.<br>**NEVER** change the SSG output level until 2 short beeps are sound. |
| 50 MHz S-METER | 1 | • Set an SSG as;<br>Frequency : 51.1515 MHz<br>Level : OFF | 50M S0 LEVEL | • Push [F-7 (SET)] to set the 50 MHz S0 meter indication and selects the next adjustment item.<br>**NEVER** change the SSG output level until 2 short beeps are sound. |
| | 2 | • Set an SSG as;<br>Level : 50 µV* (–73 dBm) | 50M S9 LEVEL | • Push [F-7 (SET)] to set the 50MHz S9 meter indication and selects the next adjustment item.<br>**NEVER** change the SSG output level until 2 short beeps are sound. |
| | 3 | • Set an SSG as;<br>Level : 50 mV* (–13 dBm) | S9+60 LEVEL | • Push [F-7 (SET)] to set the 50 MHz S9+60 meter indication and selects the opening screen.<br>**NEVER** change the SSG output level until 2 short beeps are sound. |
| REFERENCE FREQUENCY | 1 | • Connect a frequency counter to the J490 (MAIN unit).<br>• Push [F2 (REF)] to enter the REF adjustment mode.<br>***NOTE:*** Adjustment the reference frequency at least 5 minutes has been past from the IC-7800's main power (on the rear panel) is turned ON. | REF OSC | Rotate [MAIN DIAL] to set the reference frequency to 10.0000000 MHz.<br>Push [F-7 (SET)] to set the frequency and return to the opening screen. |
| | | After adjustment exiting from the adjustment mode when the transceiver is power OFF. | | |

*This output level of a standard signal generator (SSG) is indicated as SSG's open circuit.

# SECTION 5 PARTS LIST

## [FRONT UNIT]

| REF NO. | PARTS NO. | DESCRIPTION | M. | H/V LOCATION |
|---|---|---|---|---|
| W1 | 8900015930 | CAB OPC-886A (P1N10L75) <TJM> | | |
| W2 | 8900015930 | CAB OPC-886A (P1N10L75) <TJM> | | |
| W3 | 8900017810 | CAB OPC-1331A (P0.5N40L70) <TJM> | | |
| W4 | 8900017880 | CAB OPC-849A (P0.5N30L70) <TJM> | | |
| W5 | 8900015930 | CAB OPC-886A (P1N10L75) <TJM> | | |
| W6 | 8900015930 | CAB OPC-886A (P1N10L75) <TJM> | | |
| W7 | 8900017930 | CAB OPC-1336A (P1N18L70) <TJM> | | |
| W8 | 8900015930 | CAB OPC-886A (P1N10L75) <TJM> | | |
| W9 | 8900014871 | CAB OPC-1332A-1(P0.5N40L100) TJM | | |
| W10 | 8900014730 | CAB OPC-683A (P1N10L110) <TJM> | | |
| W11 | 8900017880 | CAB OPC-849A (P0.5N30L70) <TJM> | | |
| W12 | 8900017880 | CAB OPC-849A (P0.5N30L70) <TJM> | | |
| W13 | 8900015930 | CAB OPC-886A (P1N10L75) <TJM> | | |
| W14 | 8900017880 | CAB OPC-849A (P0.5N30L70) <TJM> | | |
| W15 | 8900015930 | CAB OPC-886A (P1N10L75) <TJM> | | |
| EP1 | 6910015291 | UNI LTA070B790F | | |
| EP11 | 6910011090 | SEN RMS20-250-201-P | | |
| EP12 | 6910011090 | SEN RMS20-250-201-P | | |
| EP13 | 0880001460 | UNI EX-2500 #03 SENSOR | | |
| EP101 | 6910015650 | E.O S-G2218-3#01 (MOUNT PLATE) | | |
| EP102 | 6910015650 | E.O S-G2218-3#01 (MOUNT PLATE) | | |

## [VR-A UNIT]

| REF NO. | PARTS NO. | DESCRIPTION | M. | H/V LOCATION |
|---|---|---|---|---|
| R1 | 7210002890 | VAR RK161221005J/RV-308 | | |
| R2 | 7210002890 | VAR RK161221005J/RV-308 | | |
| R3 | 7210002890 | VAR RK161221005J/RV-308 | | |
| R4 | 7210002890 | VAR RK161221005J/RV-308 | | |
| R11 | 7030003520 | S.RES ERJ3GEYJ 472 V (4.7K) | B | 44.6/27.0 |
| R12 | 7030003520 | S.RES ERJ3GEYJ 472 V (4.7K) | B | 44.6/25.7 |
| R13 | 7030003520 | S.RES ERJ3GEYJ 472 V (4.7K) | B | 59.4/29.9 |
| R14 | 7030003520 | S.RES ERJ3GEYJ 472 V (4.7K) | B | 44.6/24.4 |
| R15 | 7030003520 | S.RES ERJ3GEYJ 472 V (4.7K) | B | 44.6/21.8 |
| R16 | 7030003520 | S.RES ERJ3GEYJ 472 V (4.7K) | B | 44.6/23.1 |
| R17 | 7030003520 | S.RES ERJ3GEYJ 472 V (4.7K) | B | 63.2/9.5 |
| R18 | 7030003520 | S.RES ERJ3GEYJ 472 V (4.7K) | B | 44.6/20.5 |
| R21 | 7030003860 | S.RES ERJ3GE JPW V | B | 49.8/41.4 |
| R22 | 7030003860 | S.RES ERJ3GE JPW V | B | 52.4/42.4 |
| R23 | 7030003860 | S.RES ERJ3GE JPW V | B | 62.8/42.9 |
| R24 | 7030003860 | S.RES ERJ3GE JPW V | B | 56.4/31.1 |
| R25 | 7030003860 | S.RES ERJ3GE JPW V | B | 52.4/44.4 |
| R26 | 7030003860 | S.RES ERJ3GE JPW V | B | 27.8/10.7 |
| C11 | 4030006880 | S.CER C1608 JB 1H 472K-T | B | 49.8/36.4 |
| C12 | 4030006880 | S.CER C1608 JB 1H 472K-T | B | 65.4/36.9 |
| C13 | 4030006880 | S.CER C1608 JB 1H 472K-T | B | 52.4/37.4 |
| C14 | 4030006880 | S.CER C1608 JB 1H 472K-T | B | 62.8/37.9 |
| C15 | 4030006880 | S.CER C1608 JB 1H 472K-T | B | 49.8/38.4 |
| C16 | 4030006880 | S.CER C1608 JB 1H 472K-T | B | 65.4/38.9 |
| C17 | 4030006880 | S.CER C1608 JB 1H 472K-T | B | 52.4/39.4 |
| C18 | 4030006880 | S.CER C1608 JB 1H 472K-T | B | 62.8/39.9 |
| J1 | 6510021722 | S.CON 30FLT-SM2-TB(LF)(SN)(M) | B | 57.6/41.2 |
| J2 | 6510018921 | S.CON B8B-PH-SM4-TB(LF)(SN) | B | 20.0/4.5 |
| J3 | 6510019971 | S.CON 52808-1071 | B | 9.5/33.1 |
| J4 | 6510019971 | S.CON 52808-1071 | B | 9.5/17.9 |
| EP2 | 6910012350 | S.BEA MMZ1608Y 102BT | B | 13.7/29.6 |
| EP3 | 6910012350 | S.BEA MMZ1608Y 102BT | B | 16.5/30.6 |
| EP5 | 6910012350 | S.BEA MMZ1608Y 102BT | B | 2.7/8.2 |
| EP6 | 6910012350 | S.BEA MMZ1608Y 102BT | B | 7.7/7.8 |
| EP7 | 6910012350 | S.BEA MMZ1608Y 102BT | B | 17.3/10.8 |
| EP8 | 6910012350 | S.BEA MMZ1608Y 102BT | B | 16.0/10.8 |
| EP9 | 6910012350 | S.BEA MMZ1608Y 102BT | B | 10.3/7.0 |
| EP10 | 6910012350 | S.BEA MMZ1608Y 102BT | B | 11.6/9.2 |
| EP11 | 6910012350 | S.BEA MMZ1608Y 102BT | B | 5.4/14.1 |
| EP12 | 6910012350 | S.BEA MMZ1608Y 102BT | B | 5.4/21.5 |
| EP13 | 6910012350 | S.BEA MMZ1608Y 102BT | B | 13.7/20.4 |
| EP14 | 6910012350 | S.BEA MMZ1608Y 102BT | B | 5.4/19.3 |
| EP15 | 6910012350 | S.BEA MMZ1608Y 102BT | B | 13.7/18.4 |
| EP16 | 6910012350 | S.BEA MMZ1608Y 102BT | B | 16.2/17.4 |
| EP17 | 6910012350 | S.BEA MMZ1608Y 102BT | B | 13.7/16.4 |
| EP18 | 6910012350 | S.BEA MMZ1608Y 102BT | B | 16.2/15.5 |
| EP19 | 6910012350 | S.BEA MMZ1608Y 102BT | B | 13.7/14.6 |
| EP20 | 6910012350 | S.BEA MMZ1608Y 102BT | B | 12.6/13.3 |
| EP21 | 6910012350 | S.BEA MMZ1608Y 102BT | B | 13.7/25.0 |

Eqv.= This component is equivalent to the REF No. component listed above, and may be substituted on parts orders and repairs.

M.=Mounted side (T: Mounted on the Top side, B: Mounted on the Bottom side)
S.=Surface mount

## [VR-B UNIT]

| REF NO. | PARTS NO. | DESCRIPTION | M. | H/V LOCATION |
|---|---|---|---|---|
| R1 | 7210003160 | VAR RV-317 (RK0972210) | | |
| R2 | 7210003160 | VAR RV-317 (RK0972210) | | |
| R3 | 7030003520 | S.RES ERJ3GEYJ 472 V (4.7K) | T | 28.7/2.7 |
| R4 | 7030003520 | S.RES ERJ3GEYJ 472 V (4.7K) | T | 27.9/8.4 |
| R5 | 7030003520 | S.RES ERJ3GEYJ 472 V (4.7K) | T | 10.5/2.8 |
| R6 | 7030003520 | S.RES ERJ3GEYJ 472 V (4.7K) | T | 11.2/8.4 |
| C1 | 4030006880 | S.CER C1608 JB 1H 472K-T | T | 12.5/8.4 |
| C2 | 4030006880 | S.CER C1608 JB 1H 472K-T | T | 11.8/2.8 |
| C3 | 4030006880 | S.CER C1608 JB 1H 472K-T | T | 26.6/8.4 |
| C4 | 4030006880 | S.CER C1608 JB 1H 472K-T | T | 27.4/2.7 |
| J1 | 6510019971 | S.CON 52808-1071 | T | 19.5/5.0 |

## [VR-C UNIT]

| REF NO. | PARTS NO. | DESCRIPTION | M. | H/V LOCATION |
|---|---|---|---|---|
| R1 | 7210003160 | VAR RV-317 (RK0972210) | | |
| R2 | 7210003160 | VAR RV-317 (RK0972210) | | |
| R3 | 7030003520 | S.RES ERJ3GEYJ 472 V (4.7K) | T | 28.7/2.7 |
| R4 | 7030003520 | S.RES ERJ3GEYJ 472 V (4.7K) | T | 27.9/8.4 |
| R5 | 7030003520 | S.RES ERJ3GEYJ 472 V (4.7K) | T | 10.5/2.8 |
| R6 | 7030003520 | S.RES ERJ3GEYJ 472 V (4.7K) | T | 11.2/8.4 |
| C1 | 4030006880 | S.CER C1608 JB 1H 472K-T | T | 12.5/8.4 |
| C2 | 4030006880 | S.CER C1608 JB 1H 472K-T | T | 11.8/2.8 |
| C3 | 4030006880 | S.CER C1608 JB 1H 472K-T | T | 26.6/8.4 |
| C4 | 4030006880 | S.CER C1608 JB 1H 472K-T | T | 27.4/2.7 |
| J1 | 6510019971 | S.CON 52808-1071 | T | 19.5/5.0 |

Eqv.= This component is equivalent to the REF No. component listed above, and may be substituted on parts orders and repairs.

M.=Mounted side (T: Mounted on the Top side, B: Mounted on the Bottom side)
S.=Surface mount

## [VR-D UNIT]

| REF NO. | PARTS NO. | DESCRIPTION | | M. | H/V LOCATION |
|---|---|---|---|---|---|
| R1 | 7210001130 | VAR | RK097111T005A (10KB) | | |
| R2 | 7210001130 | VAR | RK097111T005A (10KB) | | |
| R3 | 7210001130 | VAR | RK097111T005A (10KB) | | |
| R4 | 7210001130 | VAR | RK097111T005A (10KB) | | |
| R5 | 7210001130 | VAR | RK097111T005A (10KB) | | |
| R6 | 7210001130 | VAR | RK097111T005A (10KB) | | |
| R7 | 7210001130 | VAR | RK097111T005A (10KB) | | |
| R11 | 7030003520 | S.RES | ERJ3GEYJ 472 V (4.7K) | B | 11.4/3.6 |
| R12 | 7030003520 | S.RES | ERJ3GEYJ 472 V (4.7K) | B | 28.5/3.6 |
| R13 | 7030003520 | S.RES | ERJ3GEYJ 472 V (4.7K) | B | 45.3/3.6 |
| R14 | 7030003520 | S.RES | ERJ3GEYJ 472 V (4.7K) | B | 62.4/3.6 |
| R15 | 7030003520 | S.RES | ERJ3GEYJ 472 V (4.7K) | B | 79.2/3.6 |
| R16 | 7030003520 | S.RES | ERJ3GEYJ 472 V (4.7K) | B | 96.3/3.6 |
| R17 | 7030003520 | S.RES | ERJ3GEYJ 472 V (4.7K) | B | 100.6/6.5 |
| C11 | 4030006880 | S.CER | C1608 JB 1H 472K-T | B | 11.4/2.1 |
| C12 | 4030006880 | S.CER | C1608 JB 1H 472K-T | B | 28.5/2.1 |
| C13 | 4030006880 | S.CER | C1608 JB 1H 472K-T | B | 45.3/2.1 |
| C14 | 4030006880 | S.CER | C1608 JB 1H 472K-T | B | 62.4/2.1 |
| C15 | 4030006880 | S.CER | C1608 JB 1H 472K-T | B | 79.2/2.0 |
| C16 | 4030006880 | S.CER | C1608 JB 1H 472K-T | B | 96.3/2.0 |
| C17 | 4030006880 | S.CER | C1608 JB 1H 472K-T | B | 100.6/4.9 |
| J1 | 6510019971 | S.CON | 52808-1071 | B | 43.0/16.0 |

## [SW-A UNIT]

| REF NO. | PARTS NO. | DESCRIPTION | | M. | H/V LOCATION |
|---|---|---|---|---|---|
| R2 | 7030003400 | S.RES | ERJ3GEYJ 471 V (470) | B | 8.4/85.5 |
| R3 | 7030003420 | S.RES | ERJ3GEYJ 681 V (680) | B | 8.4/53.1 |
| R4 | 7030003400 | S.RES | ERJ3GEYJ 471 V (470) | B | 8.4/56.1 |
| R6 | 7030003400 | S.RES | ERJ3GEYJ 471 V (470) | B | 26.9/42.4 |
| R7 | 7030003400 | S.RES | ERJ3GEYJ 471 V (470) | B | 33.1/41.7 |
| R8 | 7030003400 | S.RES | ERJ3GEYJ 471 V (470) | B | 51.7/40.4 |
| R9 | 7030003400 | S.RES | ERJ3GEYJ 471 V (470) | B | 62.5/36.1 |
| R10 | 7030003400 | S.RES | ERJ3GEYJ 471 V (470) | B | 75.6/36.1 |
| R11 | 7030003400 | S.RES | ERJ3GEYJ 471 V (470) | B | 90.0/37.6 |
| R12 | 7030003400 | S.RES | ERJ3GEYJ 471 V (470) | B | 57.9/82.8 |
| R13 | 7030003480 | S.RES | ERJ3GEYJ 222 V (2.2K) | B | 3.7/40.9 |
| R14 | 7030003520 | S.RES | ERJ3GEYJ 472 V (4.7K) | B | 48.4/80.4 |
| R15 | 7030003480 | S.RES | ERJ3GEYJ 222 V (2.2K) | B | 29.7/39.5 |
| R16 | 7030003520 | S.RES | ERJ3GEYJ 472 V (4.7K) | B | 41.2/39.5 |
| R17 | 7030003480 | S.RES | ERJ3GEYJ 222 V (2.2K) | B | 66.3/36.1 |
| R18 | 7030003520 | S.RES | ERJ3GEYJ 472 V (4.7K) | B | 79.5/38.2 |
| R19 | 7030003540 | S.RES | ERJ3GEYJ 682 V (6.8K) | B | 57.3/40.5 |
| R20 | 7030003540 | S.RES | ERJ3GEYJ 682 V (6.8K) | B | 29.7/40.8 |
| R21 | 7030003540 | S.RES | ERJ3GEYJ 682 V (6.8K) | B | 2.5/38.2 |
| R22 | 7030003480 | S.RES | ERJ3GEYJ 222 V (2.2K) | B | 100.2/66.5 |
| R23 | 7030003520 | S.RES | ERJ3GEYJ 472 V (4.7K) | B | 101.6/63.3 |
| R24 | 7030003580 | S.RES | ERJ3GEYJ 153 V (15K) | B | 98.6/41.5 |
| R25 | 7030003480 | S.RES | ERJ3GEYJ 222 V (2.2K) | B | 100.4/19.3 |
| R26 | 7030003520 | S.RES | ERJ3GEYJ 472 V (4.7K) | B | 100.4/7.3 |
| R27 | 7030003540 | S.RES | ERJ3GEYJ 682 V (6.8K) | B | 98.6/77.5 |
| R28 | 7030003540 | S.RES | ERJ3GEYJ 682 V (6.8K) | B | 96.3/35.3 |
| R29 | 7030003580 | S.RES | ERJ3GEYJ 153 V (15K) | B | 51.3/53.1 |
| R30 | 7030003400 | S.RES | ERJ3GEYJ 471 V (470) | B | 47.0/58.0 |
| C1 | 4030011600 | S.CER | C1608 JB 1E 104K-T | B | 99.2/63.0 |
| C2 | 4030011600 | S.CER | C1608 JB 1E 104K-T | B | 88.9/59.1 |
| C3 | 4030011600 | S.CER | C1608 JB 1E 104K-T | B | 99.4/60.5 |
| C4 | 4030011600 | S.CER | C1608 JB 1E 104K-T | B | 90.2/59.1 |
| C5 | 4030011600 | S.CER | C1608 JB 1E 104K-T | B | 98.9/59.0 |
| C6 | 4030011600 | S.CER | C1608 JB 1E 104K-T | B | 53.3/77.2 |
| C7 | 4030011600 | S.CER | C1608 JB 1E 104K-T | B | 84.8/80.1 |
| C8 | 4030011600 | S.CER | C1608 JB 1E 104K-T | B | 83.6/65.3 |
| C9 | 4030011600 | S.CER | C1608 JB 1E 104K-T | B | 88.0/52.3 |
| J1 | 6510019971 | S.CON | 52808-1071 | B | 46.7/72.7 |
| J2 | 6510019971 | S.CON | 52808-1071 | B | 83.7/72.7 |
| J3 | 6510022472 | S.CON | 40FLT-SM2-TB(LF)(SN)(M) | B | 94.4/58.7 |
| DS5 | 5040002980 | S.LED | SML-512DW-T86 | T | 8.5/87.7 |
| DS6 | 5040002930 | S.LED | SML-512MW T86 | T | 8.5/86.4 |
| DS7 | 5040002930 | S.LED | SML-512MW T86 | T | 8.5/41.5 |
| DS8 | 5040002930 | S.LED | SML-512MW T86 | T | 26.3/43.0 |
| DS9 | 5040002930 | S.LED | SML-512MW T86 | T | 37.8/43.0 |
| DS10 | 5040002930 | S.LED | SML-512MW T86 | T | 49.3/43.0 |
| DS11 | 5040002930 | S.LED | SML-512MW T86 | T | 63.3/43.0 |
| DS12 | 5040002930 | S.LED | SML-512MW T86 | T | 56.3/84.4 |
| DS13 | 5040002930 | S.LED | SML-512MW T86 | T | 74.8/43.0 |
| DS14 | 5040002930 | S.LED | SML-512MW T86 | T | 86.3/43.0 |
| DS15 | 5040002990 | S.LED | SML-512UWT86 | T | 8.5/56.5 |
| DS16 | 5040002930 | S.LED | SML-512MW T86 | T | 8.5/55.2 |
| DS17 | 5040002930 | S.LED | SML-512MW T86 | T | 56.3/56.4 |
| S1 | 2260002740 | S.SWI | LS8J2M-T | T | 9.8/77.2 |
| S2 | 2260002740 | S.SWI | LS8J2M-T | T | 8.3/62.5 |
| S3 | 2260002740 | S.SWI | LS8J2M-T | T | 8.3/48.8 |
| S4 | 2260002740 | S.SWI | LS8J2M-T | T | 8.3/35.1 |
| S5 | 2260002740 | S.SWI | LS8J2M-T | T | 37.5/38.9 |
| S6 | 2260002740 | S.SWI | LS8J2M-T | T | 26.0/38.9 |
| S7 | 2260002740 | S.SWI | LS8J2M-T | T | 49.0/38.9 |
| S8 | 2260002740 | S.SWI | LS8J2M-T | T | 63.0/38.9 |
| S11 | 2260002740 | S.SWI | LS8J2M-T | T | 56.0/79.0 |
| S12 | 2260002740 | S.SWI | LS8J2M-T | T | 74.5/38.9 |
| S13 | 2260002740 | S.SWI | LS8J2M-T | T | 86.0/38.9 |
| S14 | 2260002740 | S.SWI | LS8J2M-T | T | 100.4/82.7 |
| S15 | 2260002740 | S.SWI | LS8J2M-T | T | 100.4/70.7 |
| S16 | 2260002740 | S.SWI | LS8J2M-T | T | 100.4/58.7 |
| S17 | 2260002740 | S.SWI | LS8J2M-T | T | 100.4/46.7 |
| S18 | 2260002740 | S.SWI | LS8J2M-T | T | 100.4/34.7 |
| S19 | 2260002740 | S.SWI | LS8J2M-T | T | 100.4/22.7 |
| S20 | 2260002740 | S.SWI | LS8J2M-T | T | 100.4/10.7 |
| S21 | 2260002740 | S.SWI | LS8J2M-T | T | 56.0/51.0 |

Eqv.= This component is equivalent to the REF No. component listed above, and may be substituted on parts orders and repairs.

M.=Mounted side (T: Mounted on the Top side, B: Mounted on the Bottom side)
S.=Surface mount

## [SW-B UNIT]

| REF NO. | PARTS NO. | DESCRIPTION | M. | H/V LOCATION |
|---|---|---|---|---|
| J1 | 6510020531 | S.CON 52808-1871 | B | 112.1/20.3 |
| S1 | 2260002740 | S.SWI LS8J2M-T | T | 16.9/24.6 |
| S2 | 2260002740 | S.SWI LS8J2M-T | T | 38.9/24.6 |
| S3 | 2260002740 | S.SWI LS8J2M-T | T | 60.9/24.6 |
| S4 | 2260002740 | S.SWI LS8J2M-T | T | 82.9/24.6 |
| S5 | 2260002740 | S.SWI LS8J2M-T | T | 104.9/24.6 |
| S6 | 2260002740 | S.SWI LS8J2M-T | T | 126.9/24.6 |
| S7 | 2260002740 | S.SWI LS8J2M-T | T | 148.9/24.6 |
| S8 | 2260002740 | S.SWI LS8J2M-T | T | 16.9/15.2 |
| S9 | 2260002740 | S.SWI LS8J2M-T | T | 38.9/15.2 |
| S10 | 2260002740 | S.SWI LS8J2M-T | T | 60.9/15.2 |
| S11 | 2260002740 | S.SWI LS8J2M-T | T | 82.9/15.2 |
| S12 | 2260002740 | S.SWI LS8J2M-T | T | 104.9/15.2 |
| S13 | 2260002740 | S.SWI LS8J2M-T | T | 126.9/15.2 |
| S14 | 2260002740 | S.SWI LS8J2M-T | T | 148.9/15.2 |
| S15 | 2260002740 | S.SWI LS8J2M-T | T | 125.5/3.2 |
| S16 | 2260002740 | S.SWI LS8J2M-T | T | 145.2/3.2 |
| S17 | 2260002740 | S.SWI LS8J2M-T | T | 167.4/3.2 |

## [SW-C UNIT]

| REF NO. | PARTS NO. | DESCRIPTION | M. | H/V LOCATION |
|---|---|---|---|---|
| R1 | 7030003480 | S.RES ERJ3GEYJ 222 V (2.2K) | B | 32.7/126.8 |
| R2 | 7030003520 | S.RES ERJ3GEYJ 472 V (4.7K) | B | 30.7/122.6 |
| R3 | 7030003580 | S.RES ERJ3GEYJ 153 V (15K) | B | 30.7/118.2 |
| R4 | 7030003540 | S.RES ERJ3GEYJ 682 V (6.8K) | B | 30.7/125.7 |
| R5 | 7030003480 | S.RES ERJ3GEYJ 222 V (2.2K) | B | 30.7/100.2 |
| R6 | 7030003520 | S.RES ERJ3GEYJ 472 V (4.7K) | B | 30.7/97.4 |
| R7 | 7030003580 | S.RES ERJ3GEYJ 153 V (15K) | B | 32.0/94.8 |
| R8 | 7030003540 | S.RES ERJ3GEYJ 682 V (6.8K) | B | 32.0/101.7 |
| R9 | 7030003480 | S.RES ERJ3GEYJ 222 V (2.2K) | B | 34.8/71.4 |
| R10 | 7030003520 | S.RES ERJ3GEYJ 472 V (4.7K) | B | 35.6/69.4 |
| R11 | 7030003580 | S.RES ERJ3GEYJ 153 V (15K) | B | 35.6/66.7 |
| R12 | 7030003540 | S.RES ERJ3GEYJ 682 V (6.8K) | B | 32.7/84.5 |
| R13 | 7030003480 | S.RES ERJ3GEYJ 222 V (2.2K) | B | 43.2/46.9 |
| R14 | 7030003520 | S.RES ERJ3GEYJ 472 V (4.7K) | B | 49.3/44.4 |
| R15 | 7030003540 | S.RES ERJ3GEYJ 682 V (6.8K) | B | 43.2/50.6 |
| R51 | 7030003400 | S.RES ERJ3GEYJ 471 V (470) | B | 38.4/124.3 |
| R52 | 7030003400 | S.RES ERJ3GEYJ 471 V (470) | B | 41.3/124.3 |
| R53 | 7030003400 | S.RES ERJ3GEYJ 471 V (470) | B | 37.9/107.8 |
| R54 | 7030003400 | S.RES ERJ3GEYJ 471 V (470) | B | 46.6/102.1 |
| R55 | 7030003400 | S.RES ERJ3GEYJ 471 V (470) | B | 43.3/98.9 |
| R56 | 7030003400 | S.RES ERJ3GEYJ 471 V (470) | B | 46.6/99.4 |
| R57 | 7030003400 | S.RES ERJ3GEYJ 471 V (470) | B | 48.7/90.0 |
| R58 | 7030003400 | S.RES ERJ3GEYJ 471 V (470) | B | 48.7/93.4 |
| C1 | 4030011600 | S.CER C1608 JB 1E 104K-T | B | 28.9/94.6 |
| C2 | 4030011600 | S.CER C1608 JB 1E 104K-T | B | 41.2/82.0 |
| C3 | 4030011600 | S.CER C1608 JB 1E 104K-T | B | 32.1/71.4 |
| C4 | 4030011600 | S.CER C1608 JB 1E 104K-T | B | 43.5/82.4 |
| J1 | 6510021722 | S.CON 30FLT-SM2-TB(LF)(SN)(M) | B | 38.0/89.0 |
| J2 | 6510019971 | S.CON 52808-1071 | B | 44.3/113.1 |
| DS51 | 5040002930 | S.LED SML-512MW T86 | T | 36.5/123.3 |
| DS52 | 5040002930 | S.LED SML-512MW T86 | T | 48.0/123.3 |
| DS53 | 5040002930 | S.LED SML-512MW T86 | T | 36.5/104.8 |
| DS54 | 5040002930 | S.LED SML-512MW T86 | T | 48.0/104.8 |
| DS55 | 5040002930 | S.LED SML-512MW T86 | T | 36.5/94.8 |
| DS56 | 5040002930 | S.LED SML-512MW T86 | T | 48.0/94.8 |
| DS57 | 5040002930 | S.LED SML-512MW T86 | T | 36.5/84.8 |
| DS58 | 5040002930 | S.LED SML-512MW T86 | T | 48.0/84.8 |
| S1 | 2260002740 | S.SWI LS8J2M-T | T | 36.8/129.1 |
| S2 | 2260002740 | S.SWI LS8J2M-T | T | 48.3/129.1 |
| S3 | 2260002740 | S.SWI LS8J2M-T | T | 36.8/118.9 |
| S4 | 2260002740 | S.SWI LS8J2M-T | T | 48.3/118.9 |
| S5 | 2260002740 | S.SWI LS8J2M-T | T | 36.8/100.4 |
| S6 | 2260002740 | S.SWI LS8J2M-T | T | 48.3/100.4 |
| S7 | 2260002740 | S.SWI LS8J2M-T | T | 36.8/90.4 |
| S8 | 2260002740 | S.SWI LS8J2M-T | T | 48.3/90.4 |
| S9 | 2260002740 | S.SWI LS8J2M-T | T | 36.8/80.4 |
| S10 | 2260002740 | S.SWI LS8J2M-T | T | 48.3/80.4 |
| S11 | 2260002740 | S.SWI LS8J2M-T | T | 36.8/70.0 |
| S12 | 2260002740 | S.SWI LS8J2M-T | T | 36.8/61.2 |
| S13 | 2260002740 | S.SWI LS8J2M-T | T | 36.8/52.4 |
| S14 | 2260002740 | S.SWI LS8J2M-T | T | 36.5/42.7 |
| S15 | 2260002740 | S.SWI LS8J2M-T | T | 61.5/42.7 |
| S16 | 2260002740 | S.SWI LS8J2M-T | T | 12.3/32.5 |
| S17 | 2260002740 | S.SWI LS8J2M-T | T | 74.4/27.5 |
| S18 | 2260002740 | S.SWI LS8J2M-T | T | 12.3/14.7 |
| S19 | 2260002740 | S.SWI LS8J2M-T | T | 75.3/14.2 |
| S20 | 2260002740 | S.SWI LS8J2M-T | T | 12.3/2.4 |
| S21 | 2260002740 | S.SWI LS8J2M-T | T | 75.3/2.4 |
| S22 | 2260002740 | S.SWI LS8J2M-T | T | 25.8/2.4 |

Eqv.= This component is equivalent to the REF No. component listed above, and may be substituted on parts orders and repairs.

M.=Mounted side (T: Mounted on the Top side, B: Mounted on the Bottom side)
S.=Surface mount

## [JACK UNIT]

| REF NO. | PARTS NO. | DESCRIPTION | M. | H/V LOCATION |
|---|---|---|---|---|
| L1 | 6200003950 | S.COI HF50ACC 322513-T | B | 4.5/17.8 |
| L2 | 6200003950 | S.COI HF50ACC 322513-T | B | 2.5/12.5 |
| L3 | 6200003950 | S.COI HF50ACC 322513-T | B | 4.6/2.0 |
| L4 | 6180000900 | COI LAL 03NA 101K | | |
| L5 | 6180000900 | COI LAL 03NA 101K | | |
| L6 | 6180000900 | COI LAL 03NA 101K | | |
| L101 | 6180000900 | COI LAL 03NA 101K | | |
| L102 | 6180000900 | COI LAL 03NA 101K | | |
| L103 | 6180000900 | COI LAL 03NA 101K | | |
| R1 | 7030006060 | S.RES ERJ12YJ100U (10) | B | 16.4/76.0 |
| R2 | 7030006060 | S.RES ERJ12YJ100U (10) | B | 16.6/67.8 |
| C1 | 4030006880 | S.CER C1608 JB 1H 472K-T | B | 26.4/2.1 |
| C2 | 4030006880 | S.CER C1608 JB 1H 472K-T | B | 26.4/4.8 |
| C3 | 4030006880 | S.CER C1608 JB 1H 472K-T | B | 20.7/6.9 |
| C101 | 4030006880 | S.CER C1608 JB 1H 472K-T | B | 15.3/6.9 |
| C102 | 4030006880 | S.CER C1608 JB 1H 472K-T | B | 11.6/2.1 |
| J1 | 6510019971 | S.CON 52808-1071 | B | 19.0/3.2 |
| J2 | 6510027890 | CON 01J0370-00 | | |
| J102 | 6510023900 | CON LGR4619-7000 | | |
| EP101 | 6910012350 | S.BEA MMZ1608Y 102BT | B | 15.3/8.2 |
| EP102 | 6910012350 | S.BEA MMZ1608Y 102BT | B | 10.3/2.1 |

## [MIC UNIT]

| REF NO. | PARTS NO. | DESCRIPTION | M. | H/V LOCATION |
|---|---|---|---|---|
| L1 | 6200003261 | S.COI NLV32T-101J | T | 33.0/7.8 |
| L2 | 6200003261 | S.COI NLV32T-101J | T | 23.5/2.7 |
| L3 | 6200003261 | S.COI NLV32T-101J | T | 16.2/2.0 |
| L4 | 6200003950 | S.COI HF50ACC 322513-T | B | 15.2/15.1 |
| C1 | 4030006880 | S.CER C1608 JB 1H 472K-T | B | 8.6/67.0 |
| C2 | 4030006880 | S.CER C1608 JB 1H 472K-T | B | 5.4/69.4 |
| C3 | 4030006880 | S.CER C1608 JB 1H 472K-T | B | 11.1/67.5 |
| C4 | 4030007130 | S.CER C1608 CH 1H 101J-T | B | 35.9/71.5 |
| C5 | 4030006880 | S.CER C1608 JB 1H 472K-T | B | 31.7/36.0 |
| C6 | 4030006880 | S.CER C1608 JB 1H 472K-T | B | 9.6/0.9 |
| C7 | 4030006880 | S.CER C1608 JB 1H 472K-T | B | 7.8/10.2 |
| C8 | 4030007090 | S.CER C1608 CH 1H 470J-T | B | 9.4/13.9 |
| J1 | 6510000191 | CON FM214-8SS(P)-1 | | |
| J2 | 6510019971 | S.CON 52808-1071 | B | 12.8/20.2 |
| EP2 | 6910012350 | S.BEA MMZ1608Y 102BT | B | 4.2/6.3 |
| EP3 | 6910012350 | S.BEA MMZ1608Y 102BT | B | 7.6/2.1 |
| EP4 | 6910012350 | S.BEA MMZ1608Y 102BT | B | 13.7/31.6 |
| EP5 | 6910012350 | S.BEA MMZ1608Y 102BT | B | 16.5/32.6 |
| EP6 | 6910012350 | S.BEA MMZ1608Y 102BT | B | 13.7/34.8 |
| EP7 | 6910015130 | S.BEA MMZ1608D 301BT | B | 13.7/36.6 |
| EP8 | 6910015130 | S.BEA MMZ1608D 301BT | B | 16.5/35.8 |
| EP9 | 6910015130 | S.BEA MMZ1608D 301BT | B | 13.7/33.5 |
| EP10 | 6910015130 | S.BEA MMZ1608D 301BT | B | 13.7/23.7 |
| EP11 | 6910012350 | S.BEA MMZ1608Y 102BT | B | 13.7/22.4 |

Eqv.= This component is equivalent to the REF No. component listed above, and may be substituted on parts orders and repairs.

M.=Mounted side (T: Mounted on the Top side, B: Mounted on the Bottom side)
S.=Surface mount

## [TENKEY UNIT]

| REF NO. | PARTS NO. | DESCRIPTION | | M. | H/V LOCATION |
|---|---|---|---|---|---|
| IC1 | 1130011510 | S.IC | BU2099FV-E2 | B | 37.5/67.4 |
| IC2 | 1130011510 | S.IC | BU2099FV-E2 | B | 33.6/31.8 |
| R1 | 7030003480 | S.RES | ERJ3GEYJ 222 V (2.2K) | T | 24.1/6.1 |
| R2 | 7030003520 | S.RES | ERJ3GEYJ 472 V (4.7K) | T | 16.8/5.4 |
| R3 | 7030003580 | S.RES | ERJ3GEYJ 153 V (15K) | B | 13.8/47.5 |
| R4 | 7030003540 | S.RES | ERJ3GEYJ 682 V (6.8K) | B | 16.4/79.3 |
| R5 | 7030003480 | S.RES | ERJ3GEYJ 222 V (2.2K) | B | 31.5/67.5 |
| R6 | 7030003520 | S.RES | ERJ3GEYJ 472 V (4.7K) | B | 30.8/65.6 |
| R7 | 7030003580 | S.RES | ERJ3GEYJ 153 V (15K) | B | 32.3/50.0 |
| R8 | 7030003540 | S.RES | ERJ3GEYJ 682 V (6.8K) | B | 30.3/78.3 |
| R9 | 7030003480 | S.RES | ERJ3GEYJ 222 V (2.2K) | B | 49.8/70.1 |
| R10 | 7030003520 | S.RES | ERJ3GEYJ 472 V (4.7K) | B | 49.8/62.3 |
| R11 | 7030003580 | S.RES | ERJ3GEYJ 153 V (15K) | B | 47.6/52.7 |
| R12 | 7030003540 | S.RES | ERJ3GEYJ 682 V (6.8K) | B | 49.8/78.5 |
| R51 | 7030003390 | S.RES | ERJ3GEYJ 391 V (390) | B | 8.1/78.1 |
| R52 | 7030003390 | S.RES | ERJ3GEYJ 391 V (390) | B | 8.1/75.4 |
| R53 | 7030003390 | S.RES | ERJ3GEYJ 391 V (390) | B | 8.1/71.0 |
| R54 | 7030003390 | S.RES | ERJ3GEYJ 391 V (390) | B | 8.1/72.9 |
| R55 | 7030003390 | S.RES | ERJ3GEYJ 391 V (390) | B | 10.7/58.3 |
| R56 | 7030003390 | S.RES | ERJ3GEYJ 391 V (390) | B | 12.0/58.3 |
| R57 | 7030003390 | S.RES | ERJ3GEYJ 391 V (390) | B | 8.1/49.6 |
| R58 | 7030003390 | S.RES | ERJ3GEYJ 391 V (390) | B | 8.1/46.9 |
| R59 | 7030003390 | S.RES | ERJ3GEYJ 391 V (390) | B | 19.1/78.1 |
| R60 | 7030003390 | S.RES | ERJ3GEYJ 391 V (390) | B | 19.1/75.4 |
| R61 | 7030003390 | S.RES | ERJ3GEYJ 391 V (390) | B | 25.6/64.6 |
| R62 | 7030003390 | S.RES | ERJ3GEYJ 391 V (390) | B | 25.6/65.9 |
| R63 | 7030003390 | S.RES | ERJ3GEYJ 391 V (390) | B | 25.6/51.7 |
| R64 | 7030003390 | S.RES | ERJ3GEYJ 391 V (390) | B | 25.6/53.0 |
| R65 | 7030003390 | S.RES | ERJ3GEYJ 391 V (390) | B | 25.6/49.6 |
| R66 | 7030003390 | S.RES | ERJ3GEYJ 391 V (390) | B | 25.6/47.0 |
| R67 | 7030003390 | S.RES | ERJ3GEYJ 391 V (390) | B | 43.1/78.1 |
| R68 | 7030003390 | S.RES | ERJ3GEYJ 391 V (390) | B | 43.1/75.4 |
| R69 | 7030003390 | S.RES | ERJ3GEYJ 391 V (390) | B | 43.9/68.6 |
| R70 | 7030003390 | S.RES | ERJ3GEYJ 391 V (390) | B | 43.9/67.3 |
| R71 | 7030003390 | S.RES | ERJ3GEYJ 391 V (390) | B | 43.1/59.1 |
| R72 | 7030003390 | S.RES | ERJ3GEYJ 391 V (390) | B | 43.1/56.4 |
| R73 | 7030003390 | S.RES | ERJ3GEYJ 391 V (390) | B | 44.4/51.4 |
| R74 | 7030003390 | S.RES | ERJ3GEYJ 391 V (390) | B | 44.4/52.7 |
| R75 | 7030003460 | S.RES | ERJ3GEYJ 152 V (1.5K) | B | 29.7/21.1 |
| R76 | 7030003460 | S.RES | ERJ3GEYJ 152 V (1.5K) | B | 44.3/18.1 |
| C1 | 4030011600 | S.CER | C1608 JB 1E 104K-T | B | 8.6/16.2 |
| C2 | 4030011600 | S.CER | C1608 JB 1E 104K-T | B | 2.9/5.6 |
| C3 | 4030011600 | S.CER | C1608 JB 1E 104K-T | B | 14.3/12.3 |
| C4 | 4030011600 | S.CER | C1608 JB 1E 104K-T | B | 10.1/11.3 |
| C5 | 4030011600 | S.CER | C1608 JB 1E 104K-T | B | 1.6/5.6 |
| J1 | 6510021722 | S.CON | 30FLT-SM2-TB(LF)(SN)(M) | B | 5.2/60.0 |
| J2 | 6510021722 | S.CON | 30FLT-SM2-TB(LF)(SN)(M) | B | 5.2/31.7 |
| J3 | 6510021722 | S.CON | 30FLT-SM2-TB(LF)(SN)(M) | B | 50.0/33.0 |
| J4 | 6510019971 | S.CON | 52808-1071 | B | 53.9/57.0 |
| J5 | 6510019971 | S.CON | 52808-1071 | B | 24.5/74.8 |
| J6 | 6510003401 | CON | B04B-EH-S(LF)(SN) | | |
| J7 | 6510018971 | S.CON | B4B-PH-SM4-TB(LF)(SN) | B | 36.5/3.0 |
| DS1 | 5040002980 | S.LED | SML-512DW-T86 | T | 29.5/19.0 |
| DS2 | 5040002980 | S.LED | SML-512DW-T86 | T | 45.5/19.0 |
| S1 | 2260002740 | S.SWI | LS8J2M-T | T | 9.5/34.0 |
| S2 | 2260002740 | S.SWI | LS8J2M-T | T | 9.5/26.0 |
| S3 | 2260002740 | S.SWI | LS8J2M-T | T | 29.5/34.0 |
| S4 | 2260002740 | S.SWI | LS8J2M-T | T | 29.5/26.0 |
| S5 | 2260002740 | S.SWI | LS8J2M-T | T | 45.5/34.0 |
| S6 | 2260002740 | S.SWI | LS8J2M-T | T | 45.5/26.0 |
| S7 | 2260002740 | S.SWI | LS8J2M-T | T | 9.5/12.8 |
| S8 | 2260002740 | S.SWI | LS8J2M-T | T | 29.5/16.0 |
| S9 | 2260002740 | S.SWI | LS8J2M-T | T | 29.5/7.5 |
| S11 | 2260002820 | S.SWI | LS9J2M-2D/D-T | T | 10.6/76.2 |
| S12 | 2260002820 | S.SWI | LS9J2M-2D/D-T | T | 10.6/66.7 |
| S13 | 2260002820 | S.SWI | LS9J2M-2D/D-T | T | 10.6/57.2 |
| S14 | 2260002820 | S.SWI | LS9J2M-2D/D-T | T | 10.6/47.7 |
| S15 | 2260002820 | S.SWI | LS9J2M-2D/D-T | T | 28.1/76.2 |
| S16 | 2260002820 | S.SWI | LS9J2M-2D/D-T | T | 28.1/66.7 |
| S17 | 2260002820 | S.SWI | LS9J2M-2D/D-T | T | 28.1/57.2 |
| S18 | 2260002820 | S.SWI | LS9J2M-2D/D-T | T | 28.1/47.7 |
| S19 | 2260002820 | S.SWI | LS9J2M-2D/D-T | T | 45.6/76.2 |
| S20 | 2260002820 | S.SWI | LS9J2M-2D/D-T | T | 45.6/66.7 |
| S21 | 2260002820 | S.SWI | LS9J2M-2D/D-T | T | 45.6/57.2 |
| S22 | 2260002820 | S.SWI | LS9J2M-2D/D-T | T | 45.6/47.7 |
| S23 | 2260002740 | S.SWI | LS8J2M-T | T | 45.5/16.0 |
| S24 | 2260002740 | S.SWI | LS8J2M-T | T | 45.5/7.5 |

## [PBT1 UNIT]

| REF NO. | PARTS NO. | DESCRIPTION | | M. | H/V LOCATION |
|---|---|---|---|---|---|
| R1 | 7210003180 | VAR | RV-319 (RK0972210) | | |
| R2 | 7030003520 | S.RES | ERJ3GEYJ 472 V (4.7K) | T | 13.6/6.6 |
| R3 | 7030003520 | S.RES | ERJ3GEYJ 472 V (4.7K) | T | 13.6/10.1 |
| C1 | 4030006880 | S.CER | C1608 JB 1H 472K-T | T | 15.7/10.1 |
| C2 | 4030006880 | S.CER | C1608 JB 1H 472K-T | T | 15.7/6.6 |
| J1 | 6510019971 | S.CON | 52808-1071 | T | 24.5/7.0 |
| S1 | 2250000410 | ENC | TP90D96E20-30F-2178-1 | | |

Eqv.= This component is equivalent to the REF No. component listed above, and may be substituted on parts orders and repairs.

M.=Mounted side (T: Mounted on the Top side, B: Mounted on the Bottom side)
S.=Surface mount

## [PBT2 UNIT]

| REF NO. | PARTS NO. | DESCRIPTION | M. | H/V LOCATION |
|---|---|---|---|---|
| R1 | 7210003180 | VAR RV-319 (RK0972210) | | |
| R2 | 7210003170 | VAR RV-318 (RK09L1120CON) | | |
| R3 | 7030003520 | S.RES ERJ3GEYJ 472 V (4.7K) | T | 47.4/8.6 |
| R4 | 7030003520 | S.RES ERJ3GEYJ 472 V (4.7K) | T | 47.4/9.9 |
| R5 | 7030003520 | S.RES ERJ3GEYJ 472 V (4.7K) | T | 16.2/12.3 |
| C1 | 4030006880 | S.CER C1608 JB 1H 472K-T | T | 52.5/10.3 |
| C2 | 4030006880 | S.CER C1608 JB 1H 472K-T | T | 50.6/10.3 |
| C3 | 4030006880 | S.CER C1608 JB 1H 472K-T | T | 16.2/11.0 |
| J1 | 6510019971 | S.CON 52808-1071 | T | 59.1/5.1 |
| S1 | 2250000410 | ENC TP90D96E20-30F-2178-1 | | |

## [LED UNIT]

| REF NO. | PARTS NO. | DESCRIPTION | M. | H/V LOCATION |
|---|---|---|---|---|
| R1 | 7030003470 | S.RES ERJ3GEYJ 182 V (1.8K) | T | 9.1/14.9 |
| R2 | 7030003420 | S.RES ERJ3GEYJ 681 V (680) | T | 21.0/14.9 |
| R3 | 7030003440 | S.RES ERJ3GEYJ 102 V (1K) | T | 32.2/14.9 |
| R4 | 7030003400 | S.RES ERJ3GEYJ 471 V (470) | T | 80.2/14.9 |
| R5 | 7030003470 | S.RES ERJ3GEYJ 182 V (1.8K) | T | 126.0/14.9 |
| R6 | 7030003420 | S.RES ERJ3GEYJ 681 V (680) | T | 139.0/14.9 |
| R7 | 7030003440 | S.RES ERJ3GEYJ 102 V (1K) | T | 149.9/14.9 |
| J1 | 6510020711 | S.CON 52793-1070(1090) | T | 111.3/2.7 |
| DS1 | 5040003001 | S.LED SML-A12UT T86J | T | 5.6/15.9 |
| DS2 | 5040002961 | S.LED SML-A12MT T86J | T | 17.6/15.9 |
| DS3 | 5040003011 | S.LED SML-A12WT T86J | T | 29.6/15.9 |
| DS4 | 5040003490 | S.LED SMLA13WBDW12T | T | 76.6/15.9 |
| DS5 | 5040003001 | S.LED SML-A12UT T86J | T | 123.6/15.9 |
| DS6 | 5040002961 | S.LED SML-A12MT T86J | T | 135.6/15.9 |
| DS7 | 5040003011 | S.LED SML-A12WT T86J | T | 147.6/15.9 |

Eqv.= This component is equivalent to the REF No. component listed above, and may be substituted on parts orders and repairs.

M.=Mounted side (T: Mounted on the Top side, B: Mounted on the Bottom side)
S.=Surface mount

## [CF UNIT]

| REF NO. | PARTS NO. | DESCRIPTION | | M. | H/V LOCATION |
|---|---|---|---|---|---|
| R1 | 7030003470 | S.RES | ERJ3GEYJ 182 V (1.8K) | T | 8.8/8.7 |
| J1 | 6510024151 | S.CON | 50FY-BMT-TB(LF)(SN) | T | 34.5/4.4 |
| J2 | 6510026930 | S.CON | 31-5620-050-729-871+ | T | 34.5/13.6 |
| J3 | 6510021601 | S.CON | S2B-PH-SM4-TB(LF)(SN) | T | 13.7/3.7 |
| DS1 | 5040002990 | S.LED | SML-512UWT86 | T | 61.3/40.5 |
| EP2 | 6910015640 | E.O | 30-5610-000-002-000+ | | |

## [DISPLAY UNIT]

| REF NO. | PARTS NO. | DESCRIPTION | | M. | H/V LOCATION |
|---|---|---|---|---|---|
| IC1 | 1130011880 | S.IC | CD4051BPWR | T | 121.9/76.5 |
| IC2 | 1130011880 | S.IC | CD4051BPWR | T | 110.5/10.9 |
| IC3 | 1130011880 | S.IC | CD4051BPWR | T | 76.7/20.0 |
| IC4 | 1130011880 | S.IC | CD4051BPWR | T | 24.1/61.3 |
| IC5 | 1130011880 | S.IC | CD4051BPWR | T | 106.9/77.4 |
| IC6 | 1140015180 | S.IC | M30622M6P-535GP(SX-3009B-1) | T | 48.2/27.8 |
| IC7 | 1130011510 | S.IC | BU2099FV-E2 | T | 124.1/59.8 |
| IC201 | 1130009301 | S.IC | TC7SET08FU(T5LJF) | T | 71.1/51.8 |
| IC202 | 1130009301 | S.IC | TC7SET08FU(T5LJF) | T | 107.3/58.5 |
| IC601 | 1130011551 | S.IC | RX-4581NB-F | T | 39.0/45.9 |
| IC651 | 1110005822 | S.IC | R3112N281A-TR-FE | T | 48.0/91.2 |
| Q200 | 1590000430 | S.TRA | DTC144EUA T106 | T | 40.9/89.7 |
| Q201 | 1530003301 | S.TRA | 2SC3647S-TD-E | T | 91.2/47.1 |
| Q202 | 1530003301 | S.TRA | 2SC3647S-TD-E | T | 91.1/26.6 |
| Q203 | 1530002060 | S.TRA | 2SC4081 T106 R | T | 74.0/61.5 |
| Q204 | 1520000651 | S.TRA | 2SB1201S-TL-E | T | 79.6/65.2 |
| Q205 | 1590000680 | S.TRA | DTC114EUA T106 | T | 70.9/57.2 |
| Q206 | 1590000680 | S.TRA | DTC114EUA T106 | T | 113.1/19.4 |
| Q208 | 1590001330 | S.TRA | DTA114EUA T106 | T | 120.1/68.5 |
| Q209 | 1520000651 | S.TRA | 2SB1201S-TL-E | T | 113.9/59.9 |
| Q210 | 1530002060 | S.TRA | 2SC4081 T106 R | T | 107.4/55.3 |
| Q211 | 1590001330 | S.TRA | DTA114EUA T106 | T | 122.6/65.4 |
| Q212 | 1590000680 | S.TRA | DTC114EUA T106 | T | 72.5/54.4 |
| Q501 | 1590000680 | S.TRA | DTC114EUA T106 | T | 86.1/88.9 |
| Q502 | 1590000680 | S.TRA | DTC114EUA T106 | T | 86.1/92.6 |
| Q503 | 1590000680 | S.TRA | DTC114EUA T106 | T | 82.9/90.8 |
| Q504 | 1590001330 | S.TRA | DTA114EUA T106 | T | 89.3/88.9 |
| Q505 | 1590000680 | S.TRA | DTC114EUA T106 | T | 125.1/66.6 |
| Q601 | 1510000501 | S.TRA | 2SA1162-GR(TE85RF) | T | 41.4/85.3 |
| D7 | 1750000520 | S.DIO | DAN222TL | T | 122.5/18.8 |
| D8 | 1160000140 | S.DIO | DAP222 TL | T | 122.5/15.4 |
| D9 | 1730002341 | S.ZEN | MAZ8047GML | T | 74.4/59.4 |
| D10 | 1730002591 | S.ZEN | MAZ8033GHL | T | 109.5/57.0 |
| D11 | 1790001670 | S.DIO | RB706F-40T106 | T | 121.3/10.7 |
| D12 | 1790001670 | S.DIO | RB706F-40T106 | T | 60.0/31.0 |
| D601 | 1790001251 | S.DIO | MA2S1110GL | T | 42.2/82.9 |
| D602 | 1790001251 | S.DIO | MA2S1110GL | T | 39.0/85.9 |
| D603 | 1790001251 | S.DIO | MA2S1110GL | T | 39.0/83.4 |
| X1 | 6050009870 | S.XTA | CR-567 SMD-49 9.8304 MHz <KDS> | T | 49.7/44.6 |
| L203 | 6200003950 | S.COI | HF50ACC 322513-T | B | 222.2/32.7 |
| L204 | 6200001831 | S.COI | NLV32T-100J | B | 222.2/29.7 |
| L205 | 6200003950 | S.COI | HF50ACC 322513-T | B | 222.2/26.7 |
| L208 | 6200003950 | S.COI | HF50ACC 322513-T | T | 118.4/85.6 |
| L209 | 6200003950 | S.COI | HF50ACC 322513-T | T | 10.0/64.0 |
| L210 | 6190001191 | S.COI | D10F-#A814AY-101K | T | 86.7/79.7 |
| L211 | 6190001191 | S.COI | D10F-#A814AY-101K | T | 81.2/38.2 |
| L601 | 6200001831 | S.COI | NLV32T-100J | T | 34.8/83.9 |
| R200 | 7030003440 | S.RES | ERJ3GEYJ 102 V (1K) | T | 73.1/51.7 |
| R201 | 7030003470 | S.RES | ERJ3GEYJ 182 V (1.8K) | T | 96.6/43.7 |
| R202 | 7030003470 | S.RES | ERJ3GEYJ 182 V (1.8K) | T | 96.6/33.0 |
| R203 | 7030003800 | S.RES | ERJ3GEYJ 105 V (1M) | T | 49.7/41.3 |
| R208 | 7030003360 | S.RES | ERJ3GEYJ 221 V (220) | T | 75.0/57.0 |
| R209 | 7030003860 | S.RES | ERJ3GE JPW V | T | 14.6/25.1 |
| R210 | 7030003860 | S.RES | ERJ3GE JPW V | T | 22.0/24.5 |
| R212 | 7030003660 | S.RES | ERJ3GEYJ 683 V (68K) | T | 67.9/57.6 |
| R213 | 7030003580 | S.RES | ERJ3GEYJ 153 V (15K) | T | 70.3/54.7 |
| R214 | 7030003440 | S.RES | ERJ3GEYJ 102 V (1K) | T | 40.8/13.5 |
| R215 | 7030003440 | S.RES | ERJ3GEYJ 102 V (1K) | T | 39.5/13.5 |
| R216 | 7030003440 | S.RES | ERJ3GEYJ 102 V (1K) | T | 38.2/13.5 |
| R217 | 7030003440 | S.RES | ERJ3GEYJ 102 V (1K) | T | 36.9/13.5 |
| R218 | 7030003440 | S.RES | ERJ3GEYJ 102 V (1K) | T | 35.6/13.5 |
| R219 | 7030003440 | S.RES | ERJ3GEYJ 102 V (1K) | T | 34.3/13.5 |
| R220 | 7030003440 | S.RES | ERJ3GEYJ 102 V (1K) | T | 31.7/13.7 |
| R221 | 7030003440 | S.RES | ERJ3GEYJ 102 V (1K) | T | 33.0/13.5 |
| R222 | 7030003440 | S.RES | ERJ3GEYJ 102 V (1K) | T | 30.6/16.1 |
| R223 | 7030003440 | S.RES | ERJ3GEYJ 102 V (1K) | T | 29.9/13.6 |
| R224 | 7030003440 | S.RES | ERJ3GEYJ 102 V (1K) | T | 29.1/16.1 |
| R225 | 7030003440 | S.RES | ERJ3GEYJ 102 V (1K) | T | 28.3/13.4 |
| R226 | 7030003440 | S.RES | ERJ3GEYJ 102 V (1K) | T | 27.6/16.1 |
| R227 | 7030003440 | S.RES | ERJ3GEYJ 102 V (1K) | T | 26.8/13.4 |
| R228 | 7030003440 | S.RES | ERJ3GEYJ 102 V (1K) | T | 25.5/13.4 |
| R229 | 7030003440 | S.RES | ERJ3GEYJ 102 V (1K) | T | 22.9/13.4 |
| R230 | 7030003440 | S.RES | ERJ3GEYJ 102 V (1K) | T | 24.2/13.4 |
| R232 | 7030003440 | S.RES | ERJ3GEYJ 102 V (1K) | T | 74.2/13.5 |
| R233 | 7030003440 | S.RES | ERJ3GEYJ 102 V (1K) | T | 77.0/13.5 |
| R234 | 7030003440 | S.RES | ERJ3GEYJ 102 V (1K) | T | 75.5/13.5 |
| R235 | 7030003440 | S.RES | ERJ3GEYJ 102 V (1K) | T | 78.3/13.5 |
| R236 | 7030003440 | S.RES | ERJ3GEYJ 102 V (1K) | T | 79.6/13.5 |
| R237 | 7030003440 | S.RES | ERJ3GEYJ 102 V (1K) | T | 80.9/13.5 |
| R238 | 7030003440 | S.RES | ERJ3GEYJ 102 V (1K) | T | 82.2/13.5 |
| R239 | 7030003440 | S.RES | ERJ3GEYJ 102 V (1K) | T | 107.3/86.7 |
| R240 | 7030003440 | S.RES | ERJ3GEYJ 102 V (1K) | T | 106.0/86.8 |
| R241 | 7030003680 | S.RES | ERJ3GEYJ 104 V (100K) | T | 108.7/86.7 |
| R242 | 7030003680 | S.RES | ERJ3GEYJ 104 V (100K) | T | 104.6/86.7 |
| R246 | 7030003440 | S.RES | ERJ3GEYJ 102 V (1K) | T | 59.6/13.3 |
| R247 | 7030003440 | S.RES | ERJ3GEYJ 102 V (1K) | T | 58.3/13.3 |
| R248 | 7030003440 | S.RES | ERJ3GEYJ 102 V (1K) | T | 57.0/13.3 |
| R249 | 7030003440 | S.RES | ERJ3GEYJ 102 V (1K) | T | 55.7/13.3 |
| R250 | 7030003440 | S.RES | ERJ3GEYJ 102 V (1K) | T | 54.4/13.3 |
| R251 | 7030003320 | S.RES | ERJ3GEYJ 101 V (100) | T | 52.9/13.3 |
| R252 | 7030003440 | S.RES | ERJ3GEYJ 102 V (1K) | T | 51.6/13.3 |
| R253 | 7030003440 | S.RES | ERJ3GEYJ 102 V (1K) | T | 50.3/13.3 |
| R254 | 7030003680 | S.RES | ERJ3GEYJ 104 V (100K) | T | 48.4/13.3 |
| R255 | 7030003640 | S.RES | ERJ3GEYJ 473 V (47K) | T | 12.7/14.2 |

Eqv.= This component is equivalent to the REF No. component listed above, and may be substituted on parts orders and repairs.

M.=Mounted side (T: Mounted on the Top side, B: Mounted on the Bottom side)
S.=Surface mount

## [DISPLAY UNIT]

| REF NO. | PARTS NO. | DESCRIPTION | | M. | H/V LOCATION |
|---|---|---|---|---|---|
| R256 | 7030003640 | S.RES | ERJ3GEYJ 473 V (47K) | T | 16.6/14.2 |
| R257 | 7030003670 | S.RES | ERJ3GEYJ 823 V (82K) | T | 14.0/14.2 |
| R258 | 7030003670 | S.RES | ERJ3GEYJ 823 V (82K) | T | 15.3/14.2 |
| R259 | 7030003440 | S.RES | ERJ3GEYJ 102 V (1K) | T | 12.8/90.2 |
| R260 | 7030003440 | S.RES | ERJ3GEYJ 102 V (1K) | T | 19.4/87.2 |
| R261 | 7030003440 | S.RES | ERJ3GEYJ 102 V (1K) | T | 10.1/88.5 |
| R262 | 7030003440 | S.RES | ERJ3GEYJ 102 V (1K) | T | 7.2/79.9 |
| R263 | 7030003440 | S.RES | ERJ3GEYJ 102 V (1K) | T | 18.0/81.9 |
| R264 | 7030003440 | S.RES | ERJ3GEYJ 102 V (1K) | T | 7.2/78.6 |
| R265 | 7030003440 | S.RES | ERJ3GEYJ 102 V (1K) | T | 18.0/80.6 |
| R266 | 7030003440 | S.RES | ERJ3GEYJ 102 V (1K) | T | 7.2/77.3 |
| R267 | 7030003440 | S.RES | ERJ3GEYJ 102 V (1K) | T | 18.0/79.3 |
| R268 | 7030003440 | S.RES | ERJ3GEYJ 102 V (1K) | T | 7.2/76.0 |
| R269 | 7030003440 | S.RES | ERJ3GEYJ 102 V (1K) | T | 18.0/78.0 |
| R270 | 7030003440 | S.RES | ERJ3GEYJ 102 V (1K) | T | 7.2/74.7 |
| R271 | 7030003440 | S.RES | ERJ3GEYJ 102 V (1K) | T | 18.0/76.7 |
| R272 | 7030003440 | S.RES | ERJ3GEYJ 102 V (1K) | T | 7.2/73.4 |
| R273 | 7030003440 | S.RES | ERJ3GEYJ 102 V (1K) | T | 7.2/72.1 |
| R274 | 7030003440 | S.RES | ERJ3GEYJ 102 V (1K) | T | 18.0/75.4 |
| R275 | 7030003440 | S.RES | ERJ3GEYJ 102 V (1K) | T | 7.2/70.8 |
| R276 | 7030003440 | S.RES | ERJ3GEYJ 102 V (1K) | T | 18.0/74.1 |
| R278 | 7030003440 | S.RES | ERJ3GEYJ 102 V (1K) | T | 13.4/42.7 |
| R279 | 7030003440 | S.RES | ERJ3GEYJ 102 V (1K) | T | 4.0/43.9 |
| R280 | 7030003440 | S.RES | ERJ3GEYJ 102 V (1K) | T | 13.4/44.0 |
| R281 | 7030003440 | S.RES | ERJ3GEYJ 102 V (1K) | T | 4.0/45.2 |
| R282 | 7030003440 | S.RES | ERJ3GEYJ 102 V (1K) | T | 13.4/45.3 |
| R283 | 7030003440 | S.RES | ERJ3GEYJ 102 V (1K) | T | 4.0/46.5 |
| R284 | 7030003520 | S.RES | ERJ3GEYJ 472 V (4.7K) | T | 13.4/46.6 |
| R285 | 7030003440 | S.RES | ERJ3GEYJ 102 V (1K) | T | 4.0/47.8 |
| R286 | 7030003440 | S.RES | ERJ3GEYJ 102 V (1K) | T | 13.4/47.9 |
| R287 | 7030003440 | S.RES | ERJ3GEYJ 102 V (1K) | T | 4.0/49.1 |
| R288 | 7030003440 | S.RES | ERJ3GEYJ 102 V (1K) | T | 13.4/49.2 |
| R289 | 7030003440 | S.RES | ERJ3GEYJ 102 V (1K) | T | 13.4/50.5 |
| R290 | 7030003440 | S.RES | ERJ3GEYJ 102 V (1K) | T | 4.0/51.7 |
| R291 | 7030003440 | S.RES | ERJ3GEYJ 102 V (1K) | T | 13.4/51.8 |
| R292 | 7030003440 | S.RES | ERJ3GEYJ 102 V (1K) | T | 4.0/53.0 |
| R293 | 7030003440 | S.RES | ERJ3GEYJ 102 V (1K) | T | 13.4/54.4 |
| R294 | 7030003440 | S.RES | ERJ3GEYJ 102 V (1K) | T | 4.0/55.6 |
| R295 | 7030003440 | S.RES | ERJ3GEYJ 102 V (1K) | T | 4.0/58.2 |
| R296 | 7030003440 | S.RES | ERJ3GEYJ 102 V (1K) | T | 13.4/58.3 |
| R297 | 7030003440 | S.RES | ERJ3GEYJ 102 V (1K) | T | 4.0/60.8 |
| R298 | 7030003440 | S.RES | ERJ3GEYJ 102 V (1K) | T | 13.4/59.6 |
| R299 | 7030003440 | S.RES | ERJ3GEYJ 102 V (1K) | T | 4.0/50.4 |
| R300 | 7030003440 | S.RES | ERJ3GEYJ 102 V (1K) | T | 4.0/63.4 |
| R301 | 7030003440 | S.RES | ERJ3GEYJ 102 V (1K) | T | 13.4/62.2 |
| R302 | 7030003560 | S.RES | ERJ3GEYJ 103 V (10K) | T | 13.4/60.9 |
| R303 | 7030003560 | S.RES | ERJ3GEYJ 103 V (10K) | T | 4.0/62.1 |
| R304 | 7030003560 | S.RES | ERJ3GEYJ 103 V (10K) | T | 13.4/57.0 |
| R305 | 7030003560 | S.RES | ERJ3GEYJ 103 V (10K) | T | 4.0/59.5 |
| R306 | 7030003560 | S.RES | ERJ3GEYJ 103 V (10K) | T | 4.0/56.9 |
| R307 | 7030003560 | S.RES | ERJ3GEYJ 103 V (10K) | T | 13.4/55.7 |
| R308 | 7030003560 | S.RES | ERJ3GEYJ 103 V (10K) | T | 4.0/54.3 |
| R309 | 7030003560 | S.RES | ERJ3GEYJ 103 V (10K) | T | 13.4/53.1 |
| R310 | 7030003440 | S.RES | ERJ3GEYJ 102 V (1K) | T | 24.2/32.0 |
| R311 | 7030003440 | S.RES | ERJ3GEYJ 102 V (1K) | T | 22.9/32.0 |
| R312 | 7030003440 | S.RES | ERJ3GEYJ 102 V (1K) | T | 105.0/9.4 |
| R313 | 7030003440 | S.RES | ERJ3GEYJ 102 V (1K) | T | 105.0/10.7 |
| R314 | 7030003440 | S.RES | ERJ3GEYJ 102 V (1K) | T | 104.2/12.2 |
| R315 | 7030003440 | S.RES | ERJ3GEYJ 102 V (1K) | T | 105.0/6.8 |
| R316 | 7030003440 | S.RES | ERJ3GEYJ 102 V (1K) | T | 116.1/13.7 |
| R317 | 7030003440 | S.RES | ERJ3GEYJ 102 V (1K) | T | 116.7/8.3 |
| R318 | 7030003440 | S.RES | ERJ3GEYJ 102 V (1K) | T | 116.1/11.8 |
| R319 | 7030003440 | S.RES | ERJ3GEYJ 102 V (1K) | T | 116.7/9.6 |
| R320 | 7030003440 | S.RES | ERJ3GEYJ 102 V (1K) | T | 135.2/23.4 |
| R321 | 7030003440 | S.RES | ERJ3GEYJ 102 V (1K) | T | 127.7/20.9 |
| R322 | 7030003440 | S.RES | ERJ3GEYJ 102 V (1K) | T | 126.4/20.9 |
| R323 | 7030003560 | S.RES | ERJ3GEYJ 103 V (10K) | T | 115.0/18.7 |
| R325 | 7030003380 | S.RES | ERJ3GEYJ 331 V (330) | T | 107.0/69.6 |
| R326 | 7030003360 | S.RES | ERJ3GEYJ 221 V (220) | T | 109.9/54.4 |
| R327 | 7030003580 | S.RES | ERJ3GEYJ 153 V (15K) | T | 105.5/55.2 |
| R328 | 7030003660 | S.RES | ERJ3GEYJ 683 V (68K) | T | 105.1/61.2 |
| R329 | 7030003560 | S.RES | ERJ3GEYJ 103 V (10K) | T | 38.1/33.4 |
| R330 | 7030003480 | S.RES | ERJ3GEYJ 222 V (2.2K) | T | 128.8/54.1 |
| R331 | 7030003640 | S.RES | ERJ3GEYJ 473 V (47K) | T | 18.0/84.5 |
| R332 | 7030003640 | S.RES | ERJ3GEYJ 473 V (47K) | T | 9.2/84.9 |
| R333 | 7030003640 | S.RES | ERJ3GEYJ 473 V (47K) | T | 18.0/83.2 |
| R334 | 7030003640 | S.RES | ERJ3GEYJ 473 V (47K) | T | 9.2/83.5 |
| R335 | 7030003670 | S.RES | ERJ3GEYJ 823 V (82K) | T | 21.5/84.5 |
| R336 | 7030003670 | S.RES | ERJ3GEYJ 823 V (82K) | T | 8.4/86.9 |
| R337 | 7030003670 | S.RES | ERJ3GEYJ 823 V (82K) | T | 20.8/83.2 |
| R338 | 7030003670 | S.RES | ERJ3GEYJ 823 V (82K) | T | 8.1/81.2 |
| R339 | 7070000261 | RES | ERG2SJ 220 (22) | | |
| R340 | 7070000261 | RES | ERG2SJ 220 (22) | | |
| R342 | 7030003640 | S.RES | ERJ3GEYJ 473 V (47K) | T | 35.4/38.4 |
| R343 | 7030003640 | S.RES | ERJ3GEYJ 473 V (47K) | T | 105.2/57.8 |
| R351 | 7030003440 | S.RES | ERJ3GEYJ 102 V (1K) | T | 123.2/70.3 |
| R352 | 7030003440 | S.RES | ERJ3GEYJ 102 V (1K) | T | 101.3/80.6 |
| R353 | 7030003440 | S.RES | ERJ3GEYJ 102 V (1K) | T | 102.4/75.0 |
| R354 | 7030003440 | S.RES | ERJ3GEYJ 102 V (1K) | T | 100.2/78.0 |
| R355 | 7030003440 | S.RES | ERJ3GEYJ 102 V (1K) | T | 101.1/75.2 |
| R356 | 7030003440 | S.RES | ERJ3GEYJ 102 V (1K) | T | 128.4/78.8 |
| R357 | 7030003440 | S.RES | ERJ3GEYJ 102 V (1K) | T | 126.7/72.2 |
| R358 | 7030003440 | S.RES | ERJ3GEYJ 102 V (1K) | T | 114.8/75.7 |
| R359 | 7030003440 | S.RES | ERJ3GEYJ 102 V (1K) | T | 116.1/75.5 |
| R360 | 7030003440 | S.RES | ERJ3GEYJ 102 V (1K) | T | 130.2/77.2 |
| R361 | 7030003440 | S.RES | ERJ3GEYJ 102 V (1K) | T | 129.5/74.0 |
| R362 | 7030003440 | S.RES | ERJ3GEYJ 102 V (1K) | T | 116.5/79.3 |
| R363 | 7030003440 | S.RES | ERJ3GEYJ 102 V (1K) | T | 117.4/75.5 |
| R364 | 7030003640 | S.RES | ERJ3GEYJ 473 V (47K) | T | 61.2/29.0 |
| R365 | 7030004730 | S.RES | ERJ3GEYF 222 V (2.2K) | T | 62.0/33.0 |
| R366 | 7030003440 | S.RES | ERJ3GEYJ 102 V (1K) | T | 128.5/64.2 |
| R369 | 7030003860 | S.RES | ERJ3GE JPW V | T | 55.8/37.5 |
| R501 | 7030003640 | S.RES | ERJ3GEYJ 473 V (47K) | T | 68.5/16.9 |
| R502 | 7030003640 | S.RES | ERJ3GEYJ 473 V (47K) | T | 67.2/16.9 |
| R503 | 7030003640 | S.RES | ERJ3GEYJ 473 V (47K) | T | 36.2/32.5 |

## [DISPLAY UNIT]

| REF NO. | PARTS NO. | DESCRIPTION | | M. | H/V LOCATION |
|---|---|---|---|---|---|
| R504 | 7030003440 | S.RES | ERJ3GEYJ 102 V (1K) | T | 135.4/62.3 |
| R505 | 7030003360 | S.RES | ERJ3GEYJ 221 V (220) | T | 89.2/87.0 |
| R601 | 7030003860 | S.RES | ERJ3GE JPW V | T | 44.2/89.9 |
| R602 | 7030003520 | S.RES | ERJ3GEYJ 472 V (4.7K) | T | 41.6/87.6 |
| R603 | 7030003640 | S.RES | ERJ3GEYJ 473 V (47K) | T | 32.4/45.4 |
| R604 | 7030003560 | S.RES | ERJ3GEYJ 103 V (10K) | T | 32.4/46.9 |
| R651 | 7030003650 | S.RES | ERJ3GEYJ 563 V (56K) | T | 114.9/95.0 |
| R652 | 7030003620 | S.RES | ERJ3GEYJ 333 V (33K) | T | 118.6/95.0 |
| R653 | 7030003520 | S.RES | ERJ3GEYJ 472 V (4.7K) | T | 44.2/86.1 |
| C8 | 4030011600 | S.CER | C1608 JB 1E 104K-T | T | 134.6/74.9 |
| C201 | 4310001170 | MYL | ECQE1A 124JBB | | |
| C202 | 4030016880 | S.CER | C4520 CH 3F 150KT-A | T | 125.1/37.2 |
| C203 | 4030007020 | S.CER | C1608 CH 1H 120J-T | T | 50.5/40.0 |
| C204 | 4030007020 | S.CER | C1608 CH 1H 120J-T | T | 47.9/40.0 |
| C205 | 4030011600 | S.CER | C1608 JB 1E 104K-T | T | 27.8/64.4 |
| C206 | 4030011600 | S.CER | C1608 JB 1E 104K-T | T | 109.1/80.9 |
| C207 | 4030011600 | S.CER | C1608 JB 1E 104K-T | T | 73.3/22.2 |
| C208 | 4030011600 | S.CER | C1608 JB 1E 104K-T | T | 109.5/6.1 |
| C209 | 4030011600 | S.CER | C1608 JB 1E 104K-T | T | 124.1/79.9 |
| C210 | 4030011600 | S.CER | C1608 JB 1E 104K-T | T | 67.9/56.3 |
| C211 | 4030011600 | S.CER | C1608 JB 1E 104K-T | T | 107.8/61.2 |
| C212 | 4510008800 | S.ELE | EEE1EA100SR | T | 68.9/61.3 |
| C213 | 4510009150 | S.ELE | EEE1EA470WP | T | 77.9/52.1 |
| C214 | 4510008800 | S.ELE | EEE1EA100SR | T | 72.2/67.1 |
| C215 | 4030011600 | S.CER | C1608 JB 1E 104K-T | T | 120.9/85.9 |
| C216 | 4030011600 | S.CER | C1608 JB 1E 104K-T | T | 58.8/5.2 |
| C217 | 4030011600 | S.CER | C1608 JB 1E 104K-T | T | 108.4/83.4 |
| C218 | 4510009150 | S.ELE | EEE1EA470WP | T | 99.7/84.9 |
| C219 | 4030006860 | S.CER | C1608 JB 1H 102K-T | T | 109.8/83.4 |
| C220 | 4030011600 | S.CER | C1608 JB 1E 104K-T | T | 126.2/88.9 |
| C221 | 4030011600 | S.CER | C1608 JB 1E 104K-T | T | 103.2/55.2 |
| C222 | 4030011600 | S.CER | C1608 JB 1E 104K-T | T | 127.7/15.4 |
| C223 | 4030011600 | S.CER | C1608 JB 1E 104K-T | T | 134.7/27.7 |
| C224 | 4030011600 | S.CER | C1608 JB 1E 104K-T | T | 48.2/38.2 |
| C225 | 4030011600 | S.CER | C1608 JB 1E 104K-T | T | 119.9/61.6 |
| C226 | 4030011600 | S.CER | C1608 JB 1E 104K-T | T | 17.3/87.3 |
| C227 | 4030011600 | S.CER | C1608 JB 1E 104K-T | T | 120.9/83.0 |
| C228 | 4510008800 | S.ELE | EEE1EA100SR | T | 125.5/83.6 |
| C229 | 4030011600 | S.CER | C1608 JB 1E 104K-T | T | 7.4/65.1 |
| C230 | 4030006880 | S.CER | C1608 JB 1H 472K-T | T | 58.6/29.0 |
| C231 | 4030011600 | S.CER | C1608 JB 1E 104K-T | T | 47.6/17.4 |
| C232 | 4030011600 | S.CER | C1608 JB 1E 104K-T | T | 58.0/31.2 |
| C241 | 4030011600 | S.CER | C1608 JB 1E 104K-T | T | 119.0/80.4 |
| C242 | 4030011600 | S.CER | C1608 JB 1E 104K-T | T | 116.5/81.2 |
| C243 | 4030011600 | S.CER | C1608 JB 1E 104K-T | T | 120.3/80.4 |
| C244 | 4030011600 | S.CER | C1608 JB 1E 104K-T | T | 121.2/73.0 |
| C245 | 4030011600 | S.CER | C1608 JB 1E 104K-T | T | 128.4/80.1 |
| C246 | 4030011600 | S.CER | C1608 JB 1E 104K-T | T | 131.4/74.6 |
| C247 | 4030011600 | S.CER | C1608 JB 1E 104K-T | T | 130.2/75.9 |
| C248 | 4030011600 | S.CER | C1608 JB 1E 104K-T | T | 124.9/73.0 |
| C249 | 4030011600 | S.CER | C1608 JB 1E 104K-T | T | 112.1/6.1 |
| C250 | 4030011600 | S.CER | C1608 JB 1E 104K-T | T | 113.5/14.4 |
| C251 | 4030011600 | S.CER | C1608 JB 1E 104K-T | T | 112.1/7.4 |
| C252 | 4030011600 | S.CER | C1608 JB 1E 104K-T | T | 115.9/7.0 |
| C253 | 4030011600 | S.CER | C1608 JB 1E 104K-T | T | 104.2/13.5 |
| C254 | 4030011600 | S.CER | C1608 JB 1E 104K-T | T | 109.5/7.4 |
| C255 | 4030011600 | S.CER | C1608 JB 1E 104K-T | T | 105.0/8.1 |
| C256 | 4030011600 | S.CER | C1608 JB 1E 104K-T | T | 105.0/5.5 |
| C257 | 4030011600 | S.CER | C1608 JB 1E 104K-T | T | 72.9/13.5 |
| C258 | 4030011600 | S.CER | C1608 JB 1E 104K-T | T | 72.7/16.3 |
| C259 | 4030011600 | S.CER | C1608 JB 1E 104K-T | T | 80.2/19.0 |
| C260 | 4030011600 | S.CER | C1608 JB 1E 104K-T | T | 72.5/19.5 |
| C261 | 4030011600 | S.CER | C1608 JB 1E 104K-T | T | 76.5/28.2 |
| C262 | 4030011600 | S.CER | C1608 JB 1E 104K-T | T | 75.2/28.2 |
| C263 | 4030011600 | S.CER | C1608 JB 1E 104K-T | T | 73.3/27.4 |
| C264 | 4030011600 | S.CER | C1608 JB 1E 104K-T | T | 72.6/25.5 |
| C265 | 4030011600 | S.CER | C1608 JB 1E 104K-T | T | 21.0/52.4 |
| C266 | 4030011600 | S.CER | C1608 JB 1E 104K-T | T | 28.5/62.5 |
| C267 | 4030011600 | S.CER | C1608 JB 1E 104K-T | T | 21.6/55.8 |
| C268 | 4030011600 | S.CER | C1608 JB 1E 104K-T | T | 21.6/57.1 |
| C601 | 4510008800 | S.ELE | EEE1EA100SR | T | 29.5/86.2 |
| C602 | 4030011600 | S.CER | C1608 JB 1E 104K-T | T | 39.2/41.9 |
| C651 | 4030008890 | S.CER | C1608 JB 1H 273K-T | T | 47.9/93.5 |
| C652 | 4030011600 | S.CER | C1608 JB 1E 104K-T | T | 50.4/92.0 |
| J1 | 6510021722 | S.CON | 30FLT-SM2-TB(LF)(SN)(M) | T | 13.3/80.8 |
| J2 | 6510021722 | S.CON | 30FLT-SM2-TB(LF)(SN)(M) | T | 8.7/52.4 |
| J3 | 6510022472 | S.CON | 40FLT-SM2-TB(LF)(SN)(M) | T | 131.6/62.8 |
| J4 | 6510020531 | S.CON | 52808-1871 | T | 30.8/8.8 |
| J5 | 6510019971 | S.CON | 52808-1071 | T | 77.8/8.8 |
| J6 | 6510021722 | S.CON | 30FLT-SM2-TB(LF)(SN)(M) | T | 130.9/21.4 |
| J7 | 6510019971 | S.CON | 52808-1071 | T | 55.5/8.8 |
| J201 | 6510022472 | S.CON | 40FLT-SM2-TB(LF)(SN)(M) | T | 6.2/28.7 |
| J202 | 6510022472 | S.CON | 40FLT-SM2-TB(LF)(SN)(M) | T | 18.2/28.7 |
| J203 | 6510020081 | S.CON | 52808-2071(2090) | T | 113.5/91.3 |
| J205 | 6510003401 | CON | B04B-EH-S(LF)(SN) | | |
| J301 | 6510021181 | S.CON | SM2(8.0)B-BHS1TB(LF)(SN) | T | 131.7/38.9 |
| J302 | 6510022191 | S.CON | B3B-PH-SM4-TB(LF)(SN) | T | 94.3/7.5 |
| J601 | 6510021861 | CON | BH-800.4GG <LTC> | | |
| T201 | 5910000981 | TRA | 3319-T088-LF | | |
| BT601 | 3020000110 | LIT | CR-2032L/BK | | |

Eqv.= This component is equivalent to the REF No. component listed above, and may be substituted on parts orders and repairs.

M.=Mounted side (T: Mounted on the Top side, B: Mounted on the Bottom side)
S.=Surface mount

## [RXPLL-A UNIT]

| REF NO. | PARTS NO. | DESCRIPTION | M. | H/V LOCATION |
|---|---|---|---|---|
| IC1 | 1130011530 | S.IC CD74HC4094M96 | T | 11.9/24.1 |
| IC2 | 1130009691 | S.IC TC74HCT7007AF(F) S | T | 22.8/23.3 |
| IC51 | 1180001252 | S.IC TA7808F(TE16L1NQ) | T | 77.0/16.7 |
| IC61 | 1180000421 | S.IC TA78L05F(TE12RF) | B | 56.5/16.0 |
| IC101 | 1140007881 | S.IC TC190G08EFG0046JDZ/SC1246A | T | 31.3/89.7 |
| IC102 | 1130003831 | S.IC TC7S04F(TE85RF) | T | 33.1/74.7 |
| IC103 | 1130006441 | S.IC TC7S08F(TE85RF) | B | 34.0/92.1 |
| IC104 | 1130003831 | S.IC TC7S04F(TE85RF) | T | 31.8/101.1 |
| IC201 | 1130009230 | S.IC LMX2306TMX/NOPB | T | 27.9/38.8 |
| IC501 | 1140007881 | S.IC TC190G08EFG0046JDZ/SC1246A | T | 31.3/142.5 |
| IC502 | 1130003831 | S.IC TC7S04F(TE85RF) | T | 24.8/127.4 |
| IC503 | 1130003831 | S.IC TC7S04F(TE85RF) | T | 31.7/154.1 |
| IC602 | 1130006441 | S.IC TC7S08F(TE85RF) | B | 50.7/113.4 |
| IC651 | 1140014960 | S.IC TC190G02EFG-0058/SC1287A | T | 22.6/169.2 |
| IC652 | 1130003831 | S.IC TC7S04F(TE85RF) | T | 13.8/163.8 |
| IC1051 | 1190002010 | S.IC SD5400CY <TOMO> | T | 176.9/99.9 |
| IC1081 | 1110006180 | S.IC UPG2009TB-E3 | B | 151.7/85.1 |
| IC1402 | 1190002110 | S.IC NJG1519KC1-TE3-#ZZZB | T | 117.4/69.6 |
| IC1403 | 1190002110 | S.IC NJG1519KC1-TE3-#ZZZB | T | 113.5/106.3 |
| IC1501 | 1110006121 | S.IC DBM9A41-G-TR | T | 121.2/124.5 |
| IC1502 | 1110006121 | S.IC DBM9A41-G-TR | T | 121.2/133.0 |
| IC1503 | 1110006100 | S.IC NJM5534MD-TE1-#ZZZB | T | 138.4/151.7 |
| IC1504 | 1110006100 | S.IC NJM5534MD-TE1-#ZZZB | T | 119.2/151.7 |
| IC1505 | 1110006190 | S.IC NJM074M-TE1-#ZZZB | T | 128.8/166.9 |
| IC1506 | 1110006100 | S.IC NJM5534MD-TE1-#ZZZB | T | 128.8/175.6 |
| IC1651 | 1130011921 | S.IC TC74LCX00F(ELF) | T | 110.0/126.2 |
| IC1652 | 1110005420 | S.IC BA15532F-E2 | T | 139.8/175.6 |
| IC1653 | 1110005100 | S.IC NJM072BM-TE1-#ZZZB | B | 140.0/172.0 |
| IC1701 | 1130011530 | S.IC CD74HC4094M96 | T | 158.0/166.7 |
| IC1702 | 1130011530 | S.IC CD74HC4094M96 | T | 148.9/166.7 |
| IC1703 | 1160000132 | S.IC TD62783AFG(OSEL) | T | 157.3/154.8 |
| IC1704 | 1180000790 | S.IC AN78L10M(E1) | B | 183.3/159.9 |
| | | | | |
| Q1 | 1590001050 | S.TRA DTC114TUA T106 | B | 30.3/22.6 |
| Q30 | 1530002060 | S.TRA 2SC4081 T106 R | T | 22.3/110.9 |
| Q41 | 1590000680 | S.TRA DTC114EUA T106 | T | 12.8/34.2 |
| Q150 | 1560000331 | S.FET 2SK210-GR(TE85RF) | T | 26.9/53.0 |
| Q151 | 1530002280 | S.TRA 2SC4081 T106 S | B | 33.6/57.2 |
| Q152 | 1530002280 | S.TRA 2SC4081 T106 S | B | 30.8/78.2 |
| Q201 | 1590001330 | S.TRA DTA114EUA T106 | T | 29.6/34.1 |
| Q220 | 1560000331 | S.FET 2SK210-GR(TE85RF) | T | 72.5/33.9 |
| Q230 | 1560000331 | S.FET 2SK210-GR(TE85RF) | T | 72.5/46.4 |
| Q240 | 1560000331 | S.FET 2SK210-GR(TE85RF) | T | 72.5/58.9 |
| Q250 | 1560000331 | S.FET 2SK210-GR(TE85RF) | T | 72.5/71.4 |
| Q260 | 1560000331 | S.FET 2SK210-GR(TE85RF) | T | 72.5/83.9 |
| Q270 | 1560000331 | S.FET 2SK210-GR(TE85RF) | T | 72.5/95.8 |
| Q280 | 1590000680 | S.TRA DTC114EUA T106 | T | 82.3/34.4 |
| Q281 | 1590000680 | S.TRA DTC114EUA T106 | T | 82.3/46.9 |
| Q282 | 1590000680 | S.TRA DTC114EUA T106 | T | 82.3/59.4 |
| Q283 | 1590000680 | S.TRA DTC114EUA T106 | T | 82.3/71.9 |
| Q284 | 1590000680 | S.TRA DTC114EUA T106 | T | 82.3/84.4 |
| Q285 | 1590000680 | S.TRA DTC114EUA T106 | T | 82.3/96.4 |
| Q301 | 1530003432 | S.TRA 2SC5226A-4-TL-E | T | 92.1/30.1 |
| Q302 | 1530003432 | S.TRA 2SC5226A-4-TL-E | B | 89.1/42.5 |
| Q303 | 1530003432 | S.TRA 2SC5226A-4-TL-E | B | 91.4/25.2 |
| Q341 | 1590000680 | S.TRA DTC114EUA T106 | T | 86.4/36.7 |
| Q351 | 1580000751 | S.FET 3SK294(TE85LF) | T | 92.1/56.9 |
| Q352 | 1530003432 | S.TRA 2SC5226A-4-TL-E | B | 89.2/64.5 |
| Q363 | 1590000680 | S.TRA DTC114EUA T106 | T | 86.8/54.3 |
| Q364 | 1590001330 | S.TRA DTA114EUA T106 | T | 86.8/57.4 |
| Q421 | 1590000680 | S.TRA DTC114EUA T106 | B | 96.2/91.6 |
| Q422 | 1590000680 | S.TRA DTC114EUA T106 | B | 92.6/91.6 |
| Q441 | 1590000680 | S.TRA DTC114EUA T106 | T | 86.5/73.7 |
| Q502 | 1590000680 | S.TRA DTC114EUA T106 | T | 41.9/128.8 |
| Q540 | 1530002060 | S.TRA 2SC4081 T106 R | B | 58.7/141.2 |
| Q541 | 1560000331 | S.FET 2SK210-GR(TE85RF) | T | 68.9/142.8 |
| Q561 | 1530003432 | S.TRA 2SC5226A-4-TL-E | T | 70.6/153.8 |
| Q580 | 1530003432 | S.TRA 2SC5226A-4-TL-E | T | 41.7/147.4 |
| Q591 | 1530003151 | S.TRA 2SC4673D-TD-E | T | 61.7/166.5 |
| Q592 | 1520000561 | S.TRA 2SB1123 T-TD-E | B | 52.0/165.3 |
| Q593 | 1590000680 | S.TRA DTC114EUA T106 | B | 54.8/171.2 |
| Q680 | 1530002060 | S.TRA 2SC4081 T106 R | T | 37.5/163.2 |
| Q702 | 1530002601 | S.TRA 2SC4215-O(TE85RF) | T | 31.4/110.9 |
| Q801 | 1560000561 | S.FET 2SK882-GR(TE85LF) | T | 82.8/147.3 |
| Q811 | 1560000561 | S.FET 2SK882-GR(TE85LF) | T | 77.4/177.6 |
| Q831 | 1560000561 | S.FET 2SK882-GR(TE85LF) | T | 88.7/155.1 |
| Q832 | 1520000561 | S.TRA 2SB1123 T-TD-E | B | 77.9/167.1 |
| Q833 | 1590000680 | S.TRA DTC114EUA T106 | B | 73.5/162.5 |
| Q1001 | 1530003852 | S.TRA 2SC5551A-F-TD-E | B | 174.0/9.0 |
| Q1004 | 1590001960 | S.TRA XP4311(TX) | T | 150.0/18.8 |
| Q1005 | 1590001960 | S.TRA XP4311(TX) | T | 145.9/18.8 |
| Q1006 | 1530003852 | S.TRA 2SC5551A-F-TD-E | B | 150.0/37.6 |
| Q1007 | 1530003852 | S.TRA 2SC5551A-F-TD-E | B | 176.5/42.6 |
| Q1008 | 1530003852 | S.TRA 2SC5551A-F-TD-E | B | 160.5/42.5 |
| Q1101 | 1530003860 | TRA 2SC3950D | | |
| Q1102 | 1590000680 | S.TRA DTC114EUA T106 | T | 165.5/133.8 |
| Q1103 | 1520000561 | S.TRA 2SB1123 T-TD-E | B | 168.6/127.8 |
| Q1104 | 1530003860 | TRA 2SC3950D | | |
| Q1105 | 1530003842 | S.TRA 2SC5501A-4-TR-E | T | 166.5/142.1 |
| Q1205 | 1590001960 | S.TRA XP4311(TX) | T | 158.8/55.6 |
| Q1209 | 1530003852 | S.TRA 2SC5551A-F-TD-E | B | 121.1/34.9 |
| Q1210 | 1530003852 | S.TRA 2SC5551A-F-TD-E | B | 111.6/34.9 |
| Q1211 | 1560001311 | S.FET MMBFU310LT1G | T | 159.5/96.4 |
| Q1212 | 1560001311 | S.FET MMBFU310LT1G | T | 153.5/96.4 |
| Q1213 | 1590000680 | S.TRA DTC114EUA T106 | B | 156.9/123.8 |
| Q1214 | 1520000561 | S.TRA 2SB1123 T-TD-E | B | 155.4/113.6 |
| Q1301 | 1530003151 | S.TRA 2SC4673D-TD-E | T | 157.8/120.0 |
| Q1352 | 1530003852 | S.TRA 2SC5551A-F-TD-E | B | 140.1/66.8 |
| Q1401 | 1530003842 | S.TRA 2SC5501A-4-TR-E | T | 131.9/105.8 |
| Q1402 | 1530003021 | S.TRA 2SC4402-3-TL-E | T | 123.4/111.8 |
| Q1403 | 1530003021 | S.TRA 2SC4402-3-TL-E | T | 123.4/114.3 |
| Q1501 | 1530003451 | S.TRA 2SC4835GRL | T | 133.5/143.5 |
| Q1502 | 1530003451 | S.TRA 2SC4835GRL | T | 120.4/143.5 |
| Q1651 | 1530002601 | S.TRA 2SC4215-O(TE85RF) | B | 105.7/140.4 |

## [RXPLL-A UNIT]

| REF NO. | PARTS NO. | DESCRIPTION | M. | H/V LOCATION |
|---|---|---|---|---|
| Q1701 | 1590001960 | S.TRA XP4311(TX) | T | 106.6/43.9 |
| Q1702 | 1590001960 | S.TRA XP4311(TX) | T | 148.9/147.2 |
| Q1703 | 1590001960 | S.TRA XP4311(TX) | T | 146.4/147.2 |
| | | | | |
| D101 | 1750000520 | S.DIO DAN222TL | T | 41.8/86.2 |
| D152 | 1720000590 | S.VAR MA357(TX) | T | 17.6/59.9 |
| D153 | 1790000491 | S.DIO HSM88ASTR-E | T | 27.2/60.4 |
| D154 | 1790000491 | S.DIO HSM88ASTR-E | T | 27.2/63.8 |
| D201 | 1750000520 | S.DIO DAN222TL | T | 32.4/34.1 |
| D220 | 1720000590 | S.VAR MA357(TX) | T | 50.8/31.8 |
| D221 | 1720000590 | S.VAR MA357(TX) | T | 52.9/31.8 |
| D222 | 1790000620 | S.DIO MA77(TX) | T | 82.6/29.8 |
| D230 | 1720000590 | S.VAR MA357(TX) | T | 50.8/44.2 |
| D231 | 1720000590 | S.VAR MA357(TX) | T | 52.9/44.2 |
| D232 | 1790000620 | S.DIO MA77(TX) | T | 82.6/42.3 |
| D240 | 1720000590 | S.VAR MA357(TX) | T | 50.8/56.7 |
| D241 | 1720000590 | S.VAR MA357(TX) | T | 52.9/56.7 |
| D242 | 1790000620 | S.DIO MA77(TX) | T | 82.6/54.8 |
| D250 | 1720000590 | S.VAR MA357(TX) | T | 50.8/69.2 |
| D252 | 1790000620 | S.DIO MA77(TX) | T | 82.6/67.3 |
| D261 | 1720000590 | S.VAR MA357(TX) | T | 52.9/81.7 |
| D262 | 1790000620 | S.DIO MA77(TX) | T | 82.6/79.8 |
| D270 | 1720000590 | S.VAR MA357(TX) | T | 50.8/94.2 |
| D271 | 1720000590 | S.VAR MA357(TX) | T | 52.4/96.8 |
| D272 | 1790000620 | S.DIO MA77(TX) | T | 82.5/92.0 |
| D341 | 1790000620 | S.DIO MA77(TX) | T | 90.1/37.2 |
| D342 | 1750000520 | S.DIO DAN222TL [USA] | B | 81.1/47.7 |
| | 1160000070 | S.DIO DAN202K T146 [EUR] | | |
| | 1160000070 | S.DIO DAN202K T146 [UK] | | |
| D362 | 1790000620 | S.DIO MA77(TX) | T | 88.3/65.5 |
| D363 | 1790000620 | S.DIO MA77(TX) | T | 88.3/62.0 |
| D421 | 1790000620 | S.DIO MA77(TX) | T | 92.0/85.0 |
| D422 | 1790000620 | S.DIO MA77(TX) | T | 88.6/85.0 |
| D423 | 1790000620 | S.DIO MA77(TX) | T | 92.5/91.2 |
| D424 | 1790000620 | S.DIO MA77(TX) | T | 88.9/91.2 |
| D441 | 1790000620 | S.DIO MA77(TX) | T | 89.7/74.5 |
| D501 | 1750000520 | S.DIO DAN222TL | T | 42.0/132.0 |
| D542 | 1720000590 | S.VAR MA357(TX) | T | 62.5/139.6 |
| D821 | 1750000431 | S.DIO HSB88WSTR-E | T | 84.1/169.4 |
| D1001 | 1750000581 | S.DIO 1SV307(TPH3F) | T | 181.9/65.7 |
| D1101 | 1790000620 | S.DIO MA77(TX) | T | 177.6/146.6 |
| D1102 | 1790000620 | S.DIO MA77(TX) | T | 177.6/148.4 |
| D1201 | 1750000581 | S.DIO 1SV307(TPH3F) | T | 139.1/57.8 |
| D1351 | 1750000581 | S.DIO 1SV307(TPH3F) | T | 140.9/71.2 |
| D1653 | 1750000550 | S.DIO 1SS355 TE-17 | T | 138.9/167.2 |
| D1654 | 1750000550 | S.DIO 1SS355 TE-17 | T | 142.5/167.2 |
| D1701 | 1790001670 | S.DIO RB706F-40T106 | T | 170.5/160.8 |
| | | | | |
| FI101 | 2020001820 | S.CER SFECV10M5FA00-R0 (SFECV10.5MA5S) | T | 26.0/73.9 |
| FI831 | 2030000300 | S.MON DSF753SBF 64.491 MHz (FL-356) | T | 91.6/162.1 |
| FI1401 | 2030000920 | S.MON DSF753SDF 64.455 MHz (FL-364B) | T | 116.3/88.6 |
| FI1402 | 2030000331 | S.MON DSF753SDF 64.455 MHz (FL-358A) | T | 107.0/88.6 |
| FI1403 | 2030000510 | S.MON DSF753SDF 64.455 MHz (FL-396) | T | 126.0/85.5 |
| | | | | |
| L1 | 6200003261 | S.COI NLV32T-101J | T | 10.8/15.4 |
| L2 | 6200003261 | S.COI NLV32T-101J | T | 29.0/19.9 |
| L10 | 6200003950 | S.COI HF50ACC 322513-T | T | 38.6/14.7 |
| L11 | 6200003950 | S.COI HF50ACC 322513-T | T | 13.8/15.4 |
| L12 | 6200003950 | S.COI HF50ACC 322513-T | T | 16.8/15.4 |
| L13 | 6200003950 | S.COI HF50ACC 322513-T | T | 29.0/15.4 |
| L20 | 6200003321 | S.COI NLV32T-3R3J | T | 86.0/123.9 |
| L30 | 6200005491 | S.COI NLV32T-331J | T | 20.6/120.0 |
| L101 | 6200001831 | S.COI NLV32T-100J | T | 38.3/72.8 |
| L151 | 6130002970 | COI LB-343 | | |
| L152 | 6200001831 | S.COI NLV32T-100J | T | 30.0/54.5 |
| L201 | 6200005011 | S.COI NLV25T-100J | T | 112.0/85.8 |
| L220 | 6200010790 | S.COI C2520C-3R9G-A | T | 51.9/37.5 |
| L221 | 6190001421 | COI #E526GN-110502 | | |
| L222 | 6200010790 | S.COI C2520C-3R9G-A | T | 76.2/37.7 |
| L230 | 6200010830 | S.COI C2520C-3R3G-A | T | 51.9/50.0 |
| L231 | 6190001421 | COI #E526GN-110502 | | |
| L232 | 6200010830 | S.COI C2520C-3R3G-A | T | 76.2/50.2 |
| L240 | 6200010830 | S.COI C2520C-3R3G-A | T | 51.9/62.5 |
| L241 | 6190001421 | COI #E526GN-110502 | | |
| L242 | 6200010830 | S.COI C2520C-3R3G-A | T | 76.2/62.7 |
| L250 | 6200010820 | S.COI C2520C-2R7G-A | T | 51.9/74.9 |
| L251 | 6190001421 | COI #E526GN-110502 | | |
| L252 | 6200010820 | S.COI C2520C-2R7G-A | T | 76.2/75.2 |
| L260 | 6200010820 | S.COI C2520C-2R7G-A | T | 51.9/87.5 |
| L261 | 6190001411 | COI #E526GN-110501 | | |
| L262 | 6200010820 | S.COI C2520C-2R7G-A | T | 76.2/87.7 |
| L270 | 6200010810 | S.COI C2520C-2R2G-A | T | 51.9/99.8 |
| L271 | 6190001411 | COI #E526GN-110501 | | |
| L272 | 6200010810 | S.COI C2520C-2R2G-A | T | 76.0/100.2 |
| L280 | 6200005011 | S.COI NLV25T-100J | T | 67.4/25.5 |
| L302 | 6200001831 | S.COI NLV32T-100J | T | 89.4/42.7 |
| L331 | 6200002641 | S.COI NLV25T-R15J | T | 95.1/34.1 |
| L332 | 6200002411 | S.COI NLV25T-056J | B | 93.2/36.0 |
| L341 | 6200003261 | S.COI NLV32T-101J | T | 87.1/39.7 |
| L351 | 6200001831 | S.COI NLV32T-100J | T | 91.3/62.1 |
| L421 | 6200008641 | S.COI NLV32T-391J | T | 87.1/81.0 |
| L441 | 6200002601 | S.COI NLV25T-047J | T | 91.9/72.4 |
| L442 | 6200010730 | S.COI C2520C-68NG-A | T | 90.6/78.2 |
| L451 | 6200002641 | S.COI NLV25T-R15J | T | 95.0/81.0 |
| L452 | 6200003261 | S.COI NLV32T-101J | T | 87.1/78.0 |
| L501 | 6200001831 | S.COI NLV32T-100J | T | 31.0/125.8 |
| L530 | 6200003171 | S.COI NLV32T-330J | T | 14.6/134.9 |

Eqv.= This component is equivalent to the REF No. component listed above, and may be substituted on parts orders and repairs.

M.=Mounted side (T: Mounted on the Top side, B: Mounted on the Bottom side)
S.=Surface mount

## [RXPLL-A UNIT]

| REF NO. | PARTS NO. | DESCRIPTION | M. | H/V LOCATION |
|---|---|---|---|---|
| L531 | 6200003171 | S.COI NLV32T-330J | T | 14.6/130.8 |
| L532 | 6200003171 | S.COI NLV32T-330J | T | 15.5/127.1 |
| L541 | 6200010790 | S.COI C2520C-3R9G-A | T | 56.3/139.6 |
| L542 | 6190001421 | COI #E526GN-110502 | | |
| L543 | 6200010790 | S.COI C2520C-3R9G-A | T | 68.5/147.9 |
| L544 | 6200003261 | S.COI NLV32T-101J | B | 65.9/142.1 |
| L545 | 6200003261 | S.COI NLV32T-101J | B | 51.3/139.6 |
| L561 | 6200003261 | S.COI NLV32T-101J | B | 64.0/156.0 |
| L562 | 6200001831 | S.COI NLV32T-100J | B | 74.7/151.9 |
| L565 | 6150004250 | COI LS-471A (C-14922) | | |
| L566 | 6150004250 | COI LS-471A (C-14922) | | |
| L591 | 6200007790 | S.COI LQW2BHNR15J03L | T | 60.5/171.5 |
| L681 | 6200005491 | S.COI NLV32T-331J | B | 77.4/6.3 |
| L682 | 6200008641 | S.COI NLV32T-391J | B | 80.4/3.9 |
| L701 | 6200003261 | S.COI NLV32T-101J | T | 23.6/120.0 |
| L702 | 6150004971 | S.COI LS-522-LF | T | 37.6/108.6 |
| L703 | 6150004971 | S.COI LS-522-LF | T | 37.5/118.5 |
| L801 | 6150004280 | COI LS-484B (C-14927) | | |
| L821 | 6140003530 | COI LR-395 | | |
| L822 | 6140003530 | COI LR-395 | | |
| L831 | 6140003770 | S.COI LR-414 4KBL (STP-01435) | T | 91.6/171.6 |
| L834 | 6150004280 | COI LS-484B (C-14927) | | |
| L1001 | 6190001650 | COI ELC06D102E | | |
| L1002 | 6140004400 | COI LR-499 | | |
| L1004 | 6140003890 | COI LR-488 | | |
| L1005 | 6180001000 | COI LAL 04NA 102K | | |
| L1006 | 6140003900 | COI LR-489 | | |
| L1007 | 6140003800 | COI LR-439 | | |
| L1008 | 6190001650 | COI ELC06D102E | | |
| L1009 | 6190001650 | COI ELC06D102E | | |
| L1010 | 6140003880 | COI LR-486 | | |
| L1011 | 6140003880 | COI LR-486 | | |
| L1012 | 6140003800 | COI LR-439 | | |
| L1013 | 6200010680 | S.COI C2520C-R22G-A (0.22U) | T | 155.0/55.2 |
| L1014 | 6200010680 | S.COI C2520C-R22G-A (0.22U) | T | 158.0/12.5 |
| L1015 | 6200007790 | S.COI LQW2BHNR15J03L | B | 163.6/27.5 |
| L1052 | 6200010740 | S.COI C2520C-R27G-A | T | 177.8/74.6 |
| L1053 | 6200010740 | S.COI C2520C-R27G-A | T | 173.8/73.5 |
| L1054 | 6200010740 | S.COI C2520C-R27G-A | T | 169.4/72.6 |
| L1055 | 6140003960 | COI LR-495 | | |
| L1056 | 6200010730 | S.COI C2520C-68NG-A | T | 171.0/83.8 |
| L1058 | 6190001631 | COI #E544EN-100021 | | |
| L1060 | 6200010730 | S.COI C2520C-68NG-A | T | 149.1/76.4 |
| L1062 | 6200011450 | S.COI C2520C-R39G-A | T | 145.1/81.5 |
| L1063 | 6200010650 | S.COI C2520C-R12G-A (0.12U) | T | 141.0/82.6 |
| L1071 | 6200007780 | S.COI LQW2BHNR12J03L | B | 164.9/79.2 |
| L1072 | 6200007780 | S.COI LQW2BHNR12J03L | B | 168.0/76.1 |
| L1091 | 6200003950 | S.COI HF50ACC 322513-T | B | 171.1/149.0 |
| L1092 | 6200003950 | S.COI HF50ACC 322513-T | T | 149.8/136.5 |
| L1093 | 6200003950 | S.COI HF50ACC 322513-T | T | 157.0/135.2 |
| L1101 | 6140003920 | COI LR-491 | | |
| L1102 | 6200010650 | S.COI C2520C-R12G-A (0.12U) | T | 176.9/117.9 |
| L1103 | 6180001250 | COI LAL 04NA 3R3K | | |
| L1104 | 6200010870 | S.COI C2520C-R33G-A (0.33U) | T | 178.4/135.9 |
| L1105 | 6140003910 | COI LR-490 | | |
| L1151 | 6140004640 | COI LR-519 | | |
| L1201 | 6200007780 | S.COI LQW2BHNR12J03L | B | 119.4/17.5 |
| L1208 | 6140003800 | COI LR-439 | | |
| L1209 | 6200001831 | S.COI NLV32T-100J | T | 121.1/20.8 |
| L1210 | 6140004440 | COI LR-503 | | |
| L1211 | 6200009690 | S.COI LQH43CN101K03L | T | 115.7/34.6 |
| L1212 | 6200001831 | S.COI NLV32T-100J | T | 106.8/20.8 |
| L1213 | 6140004440 | COI LR-503 | | |
| L1214 | 6200009690 | S.COI LQH43CN101K03L | T | 105.9/34.8 |
| L1216 | 6140003800 | COI LR-439 | | |
| L1217 | 6200007750 | S.COI LQW2BHN56NJ03L | T | 148.0/63.8 |
| L1218 | 6200007770 | S.COI LQW2BHNR10J03L | T | 153.3/65.2 |
| L1219 | 6200007790 | S.COI LQW2BHNR15J03L | T | 153.3/68.5 |
| L1220 | 6140000930 | COI LR-116 | | |
| L1221 | 6200003261 | S.COI NLV32T-101J | B | 149.6/110.9 |
| L1222 | 6150005460 | COI LS-559 7K7 | | |
| L1223 | 6200007750 | S.COI LQW2BHN56NJ03L | B | 151.3/100.8 |
| L1228 | 6200010870 | S.COI C2520C-R33G-A (0.33U) | T | 158.8/71.4 |
| L1229 | 6200003950 | S.COI HF50ACC 322513-T | B | 164.7/115.0 |
| L1301 | 6200008090 | S.COI LQW2BHN68NJ03L | T | 157.2/111.9 |
| L1302 | 6200008090 | S.COI LQW2BHN68NJ03L | T | 156.4/115.5 |
| L1303 | 6200008090 | S.COI LQW2BHN68NJ03L | T | 153.4/117.5 |
| L1304 | 6200010870 | S.COI C2520C-R33G-A (0.33U) | T | 153.8/123.0 |
| L1305 | 6200003001 | S.COI NLV32T-R22J | T | 159.2/124.5 |
| L1306 | 6200001831 | S.COI NLV32T-100J | B | 152.8/118.7 |
| L1307 | 6200003001 | S.COI NLV32T-R22J | T | 153.4/112.0 |
| L1351 | 6200001831 | S.COI NLV32T-100J | T | 143.0/76.4 |
| L1353 | 6200010740 | S.COI C2520C-R27G-A | T | 141.6/67.6 |
| L1354 | 6200001831 | S.COI NLV32T-100J | T | 136.5/68.1 |
| L1401 | 6150004280 | COI LS-484B (C-14927) | | |
| L1402 | 6150004280 | COI LS-484B (C-14927) | | |
| L1403 | 6150004280 | COI LS-484B (C-14927) | | |
| L1404 | 6150004280 | COI LS-484B (C-14927) | | |
| L1405 | 6200007770 | S.COI LQW2BHNR10J03L | B | 112.5/111.4 |
| L1406 | 6200007750 | S.COI LQW2BHN56NJ03L | B | 116.6/111.4 |
| L1407 | 6140003930 | COI LR-492 | | |
| L1408 | 6190001621 | COI #E544EN-100028 | | |
| L1409 | 6200003191 | S.COI NLV32T-470J | B | 135.8/125.4 |
| L1410 | 6150004280 | COI LS-484B (C-14927) | | |
| L1411 | 6150004280 | COI LS-484B (C-14927) | | |
| L1501 | 6200003520 | S.COI ELJFB 102K-F | T | 142.1/145.1 |
| L1652 | 6200002520 | S.COI ELJNC R18K-F | T | 112.9/133.1 |
| L1653 | 6200001831 | S.COI NLV32T-100J | B | 105.4/124.6 |
| L1654 | 6200001831 | S.COI NLV32T-100J | B | 112.4/141.9 |
| L1655 | 6200001831 | S.COI NLV32T-100J | B | 124.7/139.8 |
| L1701 | 6200001831 | S.COI NLV32T-100J | T | 167.0/160.0 |
| L1702 | 6200003950 | S.COI HF50ACC 322513-T | T | 175.6/169.8 |
| L1703 | 6200003950 | S.COI HF50ACC 322513-T | T | 172.6/169.8 |
| L1704 | 6200003950 | S.COI HF50ACC 322513-T | T | 169.6/169.8 |
| L1705 | 6200003950 | S.COI HF50ACC 322513-T | T | 165.5/169.8 |

## [RXPLL-A UNIT]

| REF NO. | PARTS NO. | DESCRIPTION | M. | H/V LOCATION |
|---|---|---|---|---|
| L1803 | 6200003950 | S.COI HF50ACC 322513-T | B | 132.1/54.8 |
| L1804 | 6200003950 | S.COI HF50ACC 322513-T | B | 118.0/154.8 |
| L1805 | 6200003950 | S.COI HF50ACC 322513-T | B | 155.2/132.0 |
| L1807 | 6200003950 | S.COI HF50ACC 322513-T | B | 118.0/151.3 |
| L1808 | 6200003950 | S.COI HF50ACC 322513-T | B | 141.3/162.0 |
| L1809 | 6200003950 | S.COI HF50ACC 322513-T | B | 149.6/115.6 |
| R1 | 7030005871 | S.RES ERA3YKD 104V (100K) | T | 32.5/19.2 |
| R2 | 7030005321 | S.RES ERA3YED 103V (10K) | T | 31.2/19.2 |
| R3 | 7030003550 | S.RES ERJ3GEYJ 822 V (8.2K) | T | 16.9/23.5 |
| R4 | 7030003550 | S.RES ERJ3GEYJ 822 V (8.2K) | T | 16.9/24.8 |
| R5 | 7030003550 | S.RES ERJ3GEYJ 822 V (8.2K) | T | 13.3/31.3 |
| R6 | 7030003550 | S.RES ERJ3GEYJ 822 V (8.2K) | T | 13.3/30.0 |
| R7 | 7030003500 | S.RES ERJ3GEYJ 332 V (3.3K) | B | 26.8/13.0 |
| R8 | 7030003470 | S.RES ERJ3GEYJ 182 V (1.8K) | B | 28.2/14.7 |
| R9 | 7030003680 | S.RES ERJ3GEYJ 104 V (100K) | B | 27.5/10.6 |
| R10 | 7030003360 | S.RES ERJ3GEYJ 221 V (220) | T | 19.0/16.0 |
| R11 | 7030003360 | S.RES ERJ3GEYJ 221 V (220) | T | 20.3/16.0 |
| R12 | 7030003360 | S.RES ERJ3GEYJ 221 V (220) | T | 22.5/16.0 |
| R13 | 7030003360 | S.RES ERJ3GEYJ 221 V (220) | T | 23.8/16.0 |
| R14 | 7030003360 | S.RES ERJ3GEYJ 221 V (220) | T | 25.1/16.0 |
| R15 | 7030003360 | S.RES ERJ3GEYJ 221 V (220) | T | 26.4/16.3 |
| R16 | 7030003360 | S.RES ERJ3GEYJ 221 V (220) | T | 32.5/15.4 |
| R17 | 7030003360 | S.RES ERJ3GEYJ 221 V (220) | T | 33.8/15.4 |
| R30 | 7030003240 | S.RES ERJ3GEYJ 220 V (22) | T | 21.7/113.7 |
| R31 | 7030003600 | S.RES ERJ3GEYJ 223 V (22K) | T | 20.4/111.1 |
| R32 | 7030003320 | S.RES ERJ3GEYJ 101 V (100) | T | 23.0/113.7 |
| R33 | 7030003340 | S.RES ERJ3GEYJ 151 V (150) | T | 19.1/115.0 |
| R51 | 7030011030 | S.RES ERJ1TYJ 270U (27) | T | 66.3/13.9 |
| R52 | 7030010550 | S.RES ERJ1TYJ 820U (82) | B | 66.3/13.9 |
| R61 | 7030011030 | S.RES ERJ1TYJ 270U (27) | T | 45.1/13.9 |
| R100 | 7030003860 | S.RES ERJ3GE JPW V | T | 35.5/101.5 |
| R101 | 7030003740 | S.RES ERJ3GEYJ 334 V (330K) | T | 34.2/101.5 |
| R103 | 7030007230 | S.RES ERA3YED 102V (1K) | T | 25.1/100.3 |
| R104 | 7030007230 | S.RES ERA3YED 102V (1K) | T | 26.4/100.3 |
| R105 | 7030007230 | S.RES ERA3YED 102V (1K) | T | 27.8/100.3 |
| R106 | 7030003360 | S.RES ERJ3GEYJ 221 V (220) | T | 29.1/100.3 |
| R107 | 7030003320 | S.RES ERJ3GEYJ 101 V (100) | T | 38.1/101.5 |
| R108 | 7030007230 | S.RES ERA3YED 102V (1K) | T | 28.9/79.0 |
| R109 | 7030007230 | S.RES ERA3YED 102V (1K) | T | 41.9/84.5 |
| R110 | 7030007220 | S.RES ERA3YED 202V (2K) | T | 14.6/100.5 |
| R111 | 7030007220 | S.RES ERA3YED 202V (2K) | T | 17.2/100.5 |
| R112 | 7030007220 | S.RES ERA3YED 202V (2K) | T | 17.2/99.2 |
| R113 | 7030007220 | S.RES ERA3YED 202V (2K) | T | 17.2/97.9 |
| R114 | 7030007220 | S.RES ERA3YED 202V (2K) | T | 17.2/96.6 |
| R115 | 7030007220 | S.RES ERA3YED 202V (2K) | T | 17.2/95.2 |
| R116 | 7030007220 | S.RES ERA3YED 202V (2K) | T | 17.2/93.9 |
| R117 | 7030007220 | S.RES ERA3YED 202V (2K) | T | 17.2/92.6 |
| R118 | 7030007200 | S.RES ERA3YEB 202V (2K) | T | 17.2/91.3 |
| R119 | 7030007200 | S.RES ERA3YEB 202V (2K) | T | 17.2/89.6 |
| R120 | 7030007200 | S.RES ERA3YEB 202V (2K) | T | 17.2/87.0 |
| R121 | 7030007200 | S.RES ERA3YEB 202V (2K) | T | 17.2/84.4 |
| R122 | 7030007200 | S.RES ERA3YEB 202V (2K) | T | 17.2/81.8 |
| R123 | 7030007230 | S.RES ERA3YED 102V (1K) | T | 14.6/99.2 |
| R124 | 7030007230 | S.RES ERA3YED 102V (1K) | T | 14.6/97.9 |
| R125 | 7030007230 | S.RES ERA3YED 102V (1K) | T | 14.6/96.6 |
| R126 | 7030007230 | S.RES ERA3YED 102V (1K) | T | 14.6/95.2 |
| R127 | 7030007230 | S.RES ERA3YED 102V (1K) | T | 14.6/93.9 |
| R128 | 7030007230 | S.RES ERA3YED 102V (1K) | T | 14.6/92.6 |
| R129 | 7030007210 | S.RES ERA3YEB 102V (1K) | T | 14.6/91.3 |
| R130 | 7030007210 | S.RES ERA3YEB 102V (1K) | T | 14.6/89.6 |
| R131 | 7030007210 | S.RES ERA3YEB 102V (1K) | T | 14.6/88.3 |
| R132 | 7030007210 | S.RES ERA3YEB 102V (1K) | T | 14.6/87.0 |
| R133 | 7030007210 | S.RES ERA3YEB 102V (1K) | T | 14.6/85.7 |
| R134 | 7030009861 | S.RES ERA3YED 471V (470) | T | 14.6/84.4 |
| R135 | 7030003860 | S.RES ERJ3GE JPW V | T | 30.4/75.8 |
| R136 | 7030003800 | S.RES ERJ3GEYJ 105 V (1M) | T | 33.0/77.1 |
| R137 | 7030003200 | S.RES ERJ3GEYJ 100 V (10) | T | 35.5/75.8 |
| R138 | 7030003860 | S.RES ERJ3GE JPW V | T | 16.8/78.6 |
| R139 | 7030003860 | S.RES ERJ3GE JPW V | T | 17.6/75.8 |
| R140 | 7030007230 | S.RES ERA3YED 102V (1K) | B | 31.2/92.1 |
| R141 | 7030003320 | S.RES ERJ3GEYJ 101 V (100) | B | 33.8/86.7 |
| R150 | 7030003330 | S.RES ERJ3GEYJ 121 V (120) | B | 37.9/86.2 |
| R151 | 7030003220 | S.RES ERJ3GEYJ 150 V (15) | B | 38.6/88.1 |
| R152 | 7030005871 | S.RES ERA3YKD 104V (100K) | B | 36.2/82.6 |
| R153 | 7030005321 | S.RES ERA3YED 103V (10K) | T | 19.2/62.7 |
| R154 | 7030003320 | S.RES ERJ3GEYJ 101 V (100) | B | 26.3/54.1 |
| R155 | 7030003350 | S.RES ERJ3GEYJ 181 V (180) | B | 23.0/54.1 |
| R156 | 7030005871 | S.RES ERA3YKD 104V (100K) | T | 24.6/53.1 |
| R157 | 7030005871 | S.RES ERA3YKD 104V (100K) | T | 26.9/58.0 |
| R158 | 7030003340 | S.RES ERJ3GEYJ 151 V (150) | T | 30.0/57.3 |
| R159 | 7030003320 | S.RES ERJ3GEYJ 101 V (100) | B | 33.6/61.4 |
| R160 | 7030003360 | S.RES ERJ3GEYJ 221 V (220) | B | 33.6/59.6 |
| R161 | 7030003640 | S.RES ERJ3GEYJ 473 V (47K) | B | 33.6/54.8 |
| R163 | 7030003220 | S.RES ERJ3GEYJ 150 V (15) | B | 30.3/56.6 |
| R164 | 7030003310 | S.RES ERJ3GEYJ 820 V (82) | B | 34.1/70.4 |
| R165 | 7030003320 | S.RES ERJ3GEYJ 101 V (100) | B | 30.8/70.4 |
| R166 | 7030003320 | S.RES ERJ3GEYJ 101 V (100) | B | 30.8/72.2 |
| R167 | 7030003240 | S.RES ERJ3GEYJ 220 V (22) | B | 37.4/75.8 |
| R168 | 7030003360 | S.RES ERJ3GEYJ 221 V (220) | B | 34.1/75.8 |
| R169 | 7030003640 | S.RES ERJ3GEYJ 473 V (47K) | B | 30.8/75.8 |
| R202 | 7030007230 | S.RES ERA3YED 102V (1K) | T | 22.2/39.7 |
| R203 | 7030007230 | S.RES ERA3YED 102V (1K) | T | 22.2/38.4 |
| R204 | 7030003360 | S.RES ERJ3GEYJ 221 V (220) | T | 22.2/37.1 |
| R205 | 7030005321 | S.RES ERA3YED 103V (10K) | T | 27.4/34.0 |
| R206 | 7030003220 | S.RES ERJ3GEYJ 150 V (15) | T | 31.1/45.7 |
| R210 | 7030005351 | S.RES ERA3YED 182V (1.8K) | T | 35.7/37.5 |
| R217 | 7030009651 | S.RES ERA3YHD 820V (82) | B | 40.5/42.8 |
| R219 | 7030009691 | S.RES ERA3YED 101V (100) | B | 40.1/35.7 |
| R220 | 7030005871 | S.RES ERA3YKD 104V (100K) | T | 73.2/37.6 |
| R221 | 7030005871 | S.RES ERA3YKD 104V (100K) | T | 72.3/30.9 |
| R222 | 7030003400 | S.RES ERJ3GEYJ 471 V (470) | T | 81.4/38.3 |
| R223 | 7030007230 | S.RES ERA3YED 102V (1K) | T | 81.9/31.9 |
| R224 | 7030003320 | S.RES ERJ3GEYJ 101 V (100) | T | 73.2/40.2 |

Eqv.= This component is equivalent to the REF No. component listed above, and may be substituted on parts orders and repairs.

M.=Mounted side (T: Mounted on the Top side, B: Mounted on the Bottom side)
S.=Surface mount

## [RXPLL-A UNIT]

| REF NO. | PARTS NO. | DESCRIPTION | M. | H/V LOCATION |
|---|---|---|---|---|
| R230 | 7030005871 | S.RES ERA3YKD 104V (100K) | T | 73.2/50.1 |
| R231 | 7030005871 | S.RES ERA3YKD 104V (100K) | T | 72.3/43.3 |
| R232 | 7030003360 | S.RES ERJ3GEYJ 221 V (220) | T | 81.4/50.8 |
| R233 | 7030007230 | S.RES ERA3YED 102V (1K) | T | 81.9/44.4 |
| R234 | 7030003320 | S.RES ERJ3GEYJ 101 V (100) | T | 73.2/52.7 |
| R240 | 7030005871 | S.RES ERA3YKD 104V (100K) | T | 73.2/62.6 |
| R241 | 7030005871 | S.RES ERA3YKD 104V (100K) | T | 72.3/55.8 |
| R242 | 7030003360 | S.RES ERJ3GEYJ 221 V (220) | T | 81.4/63.3 |
| R243 | 7030007230 | S.RES ERA3YED 102V (1K) | T | 81.9/56.9 |
| R244 | 7030003320 | S.RES ERJ3GEYJ 101 V (100) | T | 73.2/65.2 |
| R250 | 7030005871 | S.RES ERA3YKD 104V (100K) | T | 73.2/75.1 |
| R251 | 7030005871 | S.RES ERA3YKD 104V (100K) | T | 72.3/68.4 |
| R252 | 7030003360 | S.RES ERJ3GEYJ 221 V (220) | T | 81.4/75.8 |
| R253 | 7030007230 | S.RES ERA3YED 102V (1K) | T | 81.9/69.4 |
| R254 | 7030003320 | S.RES ERJ3GEYJ 101 V (100) | T | 73.2/77.7 |
| R260 | 7030005871 | S.RES ERA3YKD 104V (100K) | T | 73.2/87.6 |
| R261 | 7030005871 | S.RES ERA3YKD 104V (100K) | T | 72.3/80.9 |
| R262 | 7030003400 | S.RES ERJ3GEYJ 471 V (470) | T | 81.4/88.3 |
| R263 | 7030007230 | S.RES ERA3YED 102V (1K) | T | 81.9/81.9 |
| R264 | 7030003320 | S.RES ERJ3GEYJ 101 V (100) | T | 73.2/90.2 |
| R270 | 7030005871 | S.RES ERA3YKD 104V (100K) | T | 73.2/99.5 |
| R271 | 7030005871 | S.RES ERA3YKD 104V (100K) | T | 72.3/92.8 |
| R272 | 7030003360 | S.RES ERJ3GEYJ 221 V (220) | T | 81.4/100.8 |
| R273 | 7030007230 | S.RES ERA3YED 102V (1K) | T | 81.9/94.0 |
| R274 | 7030003320 | S.RES ERJ3GEYJ 101 V (100) | T | 73.2/102.1 |
| R301 | 7030003200 | S.RES ERJ3GEYJ 100 V (10) | T | 86.5/30.6 |
| R302 | 7030007230 | S.RES ERA3YED 102V (1K) | T | 86.5/29.3 |
| R303 | 7030003360 | S.RES ERJ3GEYJ 221 V (220) | T | 92.1/28.0 |
| R304 | 7030003490 | S.RES ERJ3GEYJ 272 V (2.7K) | T | 94.0/30.1 |
| R305 | 7030003510 | S.RES ERJ3GEYJ 392 V (3.9K) | T | 95.3/30.1 |
| R306 | 7030003360 | S.RES ERJ3GEYJ 221 V (220) | T | 94.8/32.2 |
| R307 | 7030009841 | S.RES ERA3YHD 330V (33) | T | 92.1/32.2 |
| R308 | 7030003370 | S.RES ERJ3GEYJ 271 V (270) | B | 92.6/43.4 |
| R309 | 7030003540 | S.RES ERJ3GEYJ 682 V (6.8K) | B | 89.1/47.0 |
| R310 | 7030003500 | S.RES ERJ3GEYJ 332 V (3.3K) | B | 92.6/47.0 |
| R311 | 7030003350 | S.RES ERJ3GEYJ 181 V (180) | B | 89.1/45.2 |
| R312 | 7030003360 | S.RES ERJ3GEYJ 221 V (220) | B | 92.5/27.8 |
| R313 | 7030003490 | S.RES ERJ3GEYJ 272 V (2.7K) | B | 91.2/23.1 |
| R314 | 7030003510 | S.RES ERJ3GEYJ 392 V (3.9K) | B | 88.3/23.1 |
| R315 | 7030003360 | S.RES ERJ3GEYJ 221 V (220) | B | 87.6/25.1 |
| R316 | 7030003280 | S.RES ERJ3GEYJ 470 V (47) | B | 78.3/26.2 |
| R317 | 7030006220 | S.RES ERJ12YJ470U (47) | B | 90.1/31.5 |
| R318 | 7030009841 | S.RES ERA3YHD 330V (33) | B | 92.6/41.6 |
| R341 | 7030007230 | S.RES ERA3YED 102V (1K) | T | 92.1/40.1 |
| R342 | 7030005321 | S.RES ERA3YED 103V (10K) | T | 86.5/32.2 |
| R343 | 7030007230 | S.RES ERA3YED 102V (1K) | T | 89.3/34.8 |
| R351 | 7030003200 | S.RES ERJ3GEYJ 100 V (10) | B | 89.1/52.4 |
| R352 | 7030010980 | S.RES ERA3YHD 470V (47) | T | 89.3/55.8 |
| R353 | 7030009591 | S.RES ERA3YED 472V (4.7K) | T | 89.3/54.5 |
| R354 | 7030009591 | S.RES ERA3YED 472V (4.7K) | T | 89.3/50.4 |
| R355 | 7030009591 | S.RES ERA3YED 472V (4.7K) | T | 89.3/53.2 |
| R356 | 7030003320 | S.RES ERJ3GEYJ 101 V (100) | T | 89.3/57.1 |
| R357 | 7310005390 | S.TRI EVM3VBQ3 4.7K (4.7K) | T | 93.6/52.7 |
| R358 | 7030010980 | S.RES ERA3YHD 470V (47) | T | 94.9/56.4 |
| R359 | 7030003320 | S.RES ERJ3GEYJ 101 V (100) | T | 94.9/59.0 |
| R360 | 7030003320 | S.RES ERJ3GEYJ 101 V (100) | B | 92.6/63.9 |
| R361 | 7030003490 | S.RES ERJ3GEYJ 272 V (2.7K) | B | 89.2/62.1 |
| R362 | 7030003510 | S.RES ERJ3GEYJ 392 V (3.9K) | B | 92.6/60.3 |
| R363 | 7030003320 | S.RES ERJ3GEYJ 101 V (100) | B | 92.6/65.7 |
| R364 | 7030003410 | S.RES ERJ3GEYJ 561 V (560) | T | 94.9/82.9 |
| R365 | 7030007860 | S.RES ERJ3GEYJ 8R2V (8.2) | T | 92.0/83.5 |
| R366 | 7030003410 | S.RES ERJ3GEYJ 561 V (560) | T | 94.9/84.2 |
| R368 | 7030005321 | S.RES ERA3YED 103V (10K) | T | 86.1/59.6 |
| R369 | 7030008240 | S.RES ERJ12Y0R00U | B | 95.4/57.2 |
| R421 | 7030007230 | S.RES ERA3YED 102V (1K) | T | 92.1/87.9 |
| R422 | 7030007230 | S.RES ERA3YED 102V (1K) | T | 89.3/87.9 |
| R423 | 7030007230 | S.RES ERA3YED 102V (1K) | T | 92.1/89.2 |
| R424 | 7030007230 | S.RES ERA3YED 102V (1K) | T | 89.3/89.2 |
| R425 | 7030003410 | S.RES ERJ3GEYJ 561 V (560) | T | 90.1/81.6 |
| R426 | 7030003410 | S.RES ERJ3GEYJ 561 V (560) | T | 91.5/93.3 |
| R427 | 7030003320 | S.RES ERJ3GEYJ 101 V (100) | B | 86.8/87.3 |
| R428 | 7030009861 | S.RES ERA3YED 471V (470) | B | 92.1/88.0 |
| R429 | 7030009861 | S.RES ERA3YED 471V (470) | B | 89.3/88.0 |
| R441 | 7030003440 | S.RES ERJ3GEYJ 102 V (1K) | T | 92.1/75.6 |
| R442 | 7030005321 | S.RES ERA3YED 103V (10K) | T | 88.9/71.0 |
| R443 | 7030003440 | S.RES ERJ3GEYJ 102 V (1K) | T | 88.9/72.3 |
| R501 | 7030003360 | S.RES ERJ3GEYJ 221 V (220) | T | 29.2/153.1 |
| R502 | 7030007230 | S.RES ERA3YED 102V (1K) | T | 27.9/153.1 |
| R503 | 7030007230 | S.RES ERA3YED 102V (1K) | T | 26.5/153.1 |
| R504 | 7030007230 | S.RES ERA3YED 102V (1K) | T | 25.2/153.1 |
| R506 | 7030003800 | S.RES ERJ3GEYJ 105 V (1M) | T | 34.1/154.5 |
| R507 | 7030003860 | S.RES ERJ3GE JPW V | B | 50.9/127.0 |
| R509 | 7030007230 | S.RES ERA3YED 102V (1K) | T | 42.5/136.1 |
| R510 | 7030007220 | S.RES ERA3YED 202V (2K) | T | 14.6/153.6 |
| R511 | 7030007220 | S.RES ERA3YED 202V (2K) | T | 17.2/153.6 |
| R512 | 7030007220 | S.RES ERA3YED 202V (2K) | T | 17.2/152.3 |
| R513 | 7030007220 | S.RES ERA3YED 202V (2K) | T | 17.2/151.0 |
| R514 | 7030007220 | S.RES ERA3YED 202V (2K) | T | 17.2/149.7 |
| R515 | 7030007220 | S.RES ERA3YED 202V (2K) | T | 17.2/148.3 |
| R516 | 7030007220 | S.RES ERA3YED 202V (2K) | T | 17.2/147.0 |
| R517 | 7030007220 | S.RES ERA3YED 202V (2K) | T | 17.2/145.7 |
| R518 | 7030007200 | S.RES ERA3YEB 202V (2K) | T | 17.2/144.4 |
| R519 | 7030007200 | S.RES ERA3YEB 202V (2K) | T | 17.2/142.7 |
| R520 | 7030007200 | S.RES ERA3YEB 202V (2K) | T | 17.2/141.4 |
| R521 | 7030007200 | S.RES ERA3YEB 202V (2K) | T | 17.2/140.1 |
| R522 | 7030007200 | S.RES ERA3YEB 202V (2K) | T | 17.2/138.8 |
| R523 | 7030007230 | S.RES ERA3YED 102V (1K) | T | 14.6/152.3 |
| R524 | 7030007230 | S.RES ERA3YED 102V (1K) | T | 14.6/151.0 |
| R525 | 7030007230 | S.RES ERA3YED 102V (1K) | T | 14.6/149.7 |
| R526 | 7030007230 | S.RES ERA3YED 102V (1K) | T | 14.6/148.3 |
| R527 | 7030007230 | S.RES ERA3YED 102V (1K) | T | 14.6/147.0 |
| R528 | 7030007230 | S.RES ERA3YED 102V (1K) | T | 14.6/145.7 |
| R529 | 7030007210 | S.RES ERA3YEB 102V (1K) | T | 14.6/144.4 |
| R530 | 7030007210 | S.RES ERA3YEB 102V (1K) | T | 14.6/142.7 |
| R531 | 7030007210 | S.RES ERA3YEB 102V (1K) | T | 14.6/141.4 |

## [RXPLL-A UNIT]

| REF NO. | PARTS NO. | DESCRIPTION | M. | H/V LOCATION |
|---|---|---|---|---|
| R532 | 7030007210 | S.RES ERA3YEB 102V (1K) | T | 14.6/140.1 |
| R533 | 7030007210 | S.RES ERA3YEB 102V (1K) | T | 14.6/138.8 |
| R534 | 7030003860 | S.RES ERJ3GE JPW V | T | 22.2/127.6 |
| R535 | 7030003800 | S.RES ERJ3GEYJ 105 V (1M) | T | 24.8/129.8 |
| R536 | 7030003200 | S.RES ERJ3GEYJ 100 V (10) | T | 28.0/128.3 |
| R537 | 7030007230 | S.RES ERA3YED 102V (1K) | T | 30.3/131.9 |
| R538 | 7030003360 | S.RES ERJ3GEYJ 221 V (220) | B | 34.9/146.5 |
| R540 | 7030007230 | S.RES ERA3YED 102V (1K) | B | 52.3/142.8 |
| R544 | 7030005871 | S.RES ERA3YKD 104V (100K) | T | 69.4/140.4 |
| R545 | 7030005871 | S.RES ERA3YKD 104V (100K) | T | 69.4/139.1 |
| R546 | 7030009861 | S.RES ERA3YED 471V (470) | T | 67.5/150.7 |
| R548 | 7030009591 | S.RES ERA3YED 472V (4.7K) | B | 43.4/136.5 |
| R550 | 7030009691 | S.RES ERA3YED 101V (100) | B | 43.4/134.7 |
| R554 | 7030009891 | S.RES ERA3YED 151V (150) | B | 47.2/133.9 |
| R555 | 7030003380 | S.RES ERJ3GEYJ 331 V (330) | B | 61.9/142.1 |
| R556 | 7030005981 | S.RES ERA3YED 333V (33K) | B | 44.3/128.2 |
| R561 | 7030003200 | S.RES ERJ3GEYJ 100 V (10) | T | 71.3/148.5 |
| R562 | 7030003360 | S.RES ERJ3GEYJ 221 V (220) | T | 65.7/155.5 |
| R563 | 7030003490 | S.RES ERJ3GEYJ 272 V (2.7K) | T | 70.5/151.9 |
| R564 | 7030003510 | S.RES ERJ3GEYJ 392 V (3.9K) | T | 70.5/150.6 |
| R565 | 7030003360 | S.RES ERJ3GEYJ 221 V (220) | T | 67.0/155.5 |
| R570 | 7030003230 | S.RES ERJ3GEYJ 180 V (18) | T | 63.1/155.5 |
| R571 | 7030003230 | S.RES ERJ3GEYJ 180 V (18) | T | 58.5/155.0 |
| R572 | 7030003290 | S.RES ERJ3GEYJ 560 V (56) | B | 57.2/156.3 |
| R573 | 7030009841 | S.RES ERA3YHD 330V (33) | T | 61.8/155.5 |
| R574 | 7030003300 | S.RES ERJ3GEYJ 680 V (68) | T | 60.5/155.5 |
| R575 | 7030003220 | S.RES ERJ3GEYJ 150 V (15) | T | 58.5/156.3 |
| R580 | 7030009861 | S.RES ERA3YED 471V (470) | T | 41.9/153.7 |
| R581 | 7030003360 | S.RES ERJ3GEYJ 221 V (220) | T | 41.9/145.5 |
| R582 | 7030003600 | S.RES ERJ3GEYJ 223 V (22K) | T | 41.9/149.5 |
| R587 | 7030003370 | S.RES ERJ3GEYJ 271 V (270) | T | 55.7/157.6 |
| R588 | 7030003230 | S.RES ERJ3GEYJ 180 V (18) | T | 58.5/158.9 |
| R589 | 7030003370 | S.RES ERJ3GEYJ 271 V (270) | T | 55.7/158.9 |
| R591 | 7030003320 | S.RES ERJ3GEYJ 101 V (100) | T | 58.2/169.9 |
| R592 | 7030005321 | S.RES ERA3YED 103V (10K) | T | 58.5/167.9 |
| R593 | 7030003480 | S.RES ERJ3GEYJ 222 V (2.2K) | T | 58.5/165.1 |
| R594 | 7030003320 | S.RES ERJ3GEYJ 101 V (100) | B | 61.9/168.1 |
| R595 | 7030003640 | S.RES ERJ3GEYJ 473 V (47K) | B | 55.9/165.3 |
| R596 | 7030003540 | S.RES ERJ3GEYJ 682 V (6.8K) | B | 54.7/168.9 |
| R603 | 7030003480 | S.RES ERJ3GEYJ 222 V (2.2K) | T | 56.3/110.9 |
| R604 | 7030007230 | S.RES ERA3YED 102V (1K) | B | 53.5/115.9 |
| R605 | 7030003320 | S.RES ERJ3GEYJ 101 V (100) | T | 46.8/113.4 |
| R651 | 7030007230 | S.RES ERA3YED 102V (1K) | B | 23.5/177.1 |
| R652 | 7030003360 | S.RES ERJ3GEYJ 221 V (220) | T | 13.5/170.8 |
| R653 | 7030007230 | S.RES ERA3YED 102V (1K) | T | 13.5/169.5 |
| R654 | 7030007230 | S.RES ERA3YED 102V (1K) | T | 13.5/168.2 |
| R656 | 7030003800 | S.RES ERJ3GEYJ 105 V (1M) | T | 15.0/161.4 |
| R657 | 7030003320 | S.RES ERJ3GEYJ 101 V (100) | T | 20.2/161.4 |
| R661 | 7030007220 | S.RES ERA3YED 202V (2K) | T | 31.7/162.8 |
| R662 | 7030007220 | S.RES ERA3YED 202V (2K) | T | 31.7/164.1 |
| R663 | 7030007220 | S.RES ERA3YED 202V (2K) | T | 31.7/165.4 |
| R664 | 7030007220 | S.RES ERA3YED 202V (2K) | T | 31.7/166.7 |
| R665 | 7030007220 | S.RES ERA3YED 202V (2K) | T | 31.7/168.0 |
| R666 | 7030007220 | S.RES ERA3YED 202V (2K) | T | 31.7/170.6 |
| R667 | 7030007220 | S.RES ERA3YED 202V (2K) | T | 31.7/171.9 |
| R668 | 7030007220 | S.RES ERA3YED 202V (2K) | T | 31.7/173.2 |
| R669 | 7030007200 | S.RES ERA3YEB 202V (2K) | T | 31.7/174.5 |
| R670 | 7030007200 | S.RES ERA3YEB 202V (2K) | T | 31.7/175.8 |
| R671 | 7030007200 | S.RES ERA3YEB 202V (2K) | T | 31.7/177.1 |
| R673 | 7030007230 | S.RES ERA3YED 102V (1K) | T | 34.3/165.4 |
| R674 | 7030007230 | S.RES ERA3YED 102V (1K) | T | 34.3/166.7 |
| R675 | 7030007230 | S.RES ERA3YED 102V (1K) | T | 34.3/168.0 |
| R676 | 7030007230 | S.RES ERA3YED 102V (1K) | T | 34.3/169.3 |
| R677 | 7030007230 | S.RES ERA3YED 102V (1K) | T | 34.3/170.6 |
| R678 | 7030007230 | S.RES ERA3YED 102V (1K) | T | 34.3/171.9 |
| R679 | 7030007210 | S.RES ERA3YEB 102V (1K) | T | 34.3/173.2 |
| R680 | 7030007210 | S.RES ERA3YEB 102V (1K) | T | 34.3/174.5 |
| R681 | 7030007210 | S.RES ERA3YEB 102V (1K) | T | 34.3/175.8 |
| R682 | 7030003860 | S.RES ERJ3GE JPW V | B | 58.4/166.0 |
| R685 | 7030003460 | S.RES ERJ3GEYJ 152 V (1.5K) | T | 38.4/169.7 |
| R686 | 7030003320 | S.RES ERJ3GEYJ 101 V (100) | T | 40.3/163.4 |
| R687 | 7030003470 | S.RES ERJ3GEYJ 182 V (1.8K) | T | 37.4/165.1 |
| R688 | 7030003480 | S.RES ERJ3GEYJ 222 V (2.2K) | T | 34.3/162.8 |
| R689 | 7030003360 | S.RES ERJ3GEYJ 221 V (220) | T | 33.6/161.5 |
| R690 | 7030003370 | S.RES ERJ3GEYJ 271 V (270) | T | 46.4/165.3 |
| R691 | 7030003230 | S.RES ERJ3GEYJ 180 V (18) | T | 48.4/164.8 |
| R692 | 7030003370 | S.RES ERJ3GEYJ 271 V (270) | T | 46.4/166.6 |
| R693 | 7030003500 | S.RES ERJ3GEYJ 332 V (3.3K) | T | 37.1/169.7 |
| R704 | 7030009841 | S.RES ERA3YHD 330V (33) | T | 30.8/113.7 |
| R705 | 7030003600 | S.RES ERJ3GEYJ 223 V (22K) | T | 29.5/113.7 |
| R706 | 7030005321 | S.RES ERA3YED 103V (10K) | T | 28.2/113.7 |
| R707 | 7030009861 | S.RES ERA3YED 471V (470) | T | 30.8/108.1 |
| R708 | 7030003410 | S.RES ERJ3GEYJ 561 V (560) | T | 43.3/118.8 |
| R709 | 7030007860 | S.RES ERJ3GEYJ 8R2V (8.2) | T | 43.3/116.0 |
| R710 | 7030003410 | S.RES ERJ3GEYJ 561 V (560) | T | 43.8/121.1 |
| R711 | 7030003320 | S.RES ERJ3GEYJ 101 V (100) | T | 38.0/154.5 |
| R802 | 7030009861 | S.RES ERA3YED 471V (470) | T | 78.3/147.3 |
| R803 | 7030005321 | S.RES ERA3YED 103V (10K) | T | 79.6/147.3 |
| R804 | 7030003320 | S.RES ERJ3GEYJ 101 V (100) | T | 80.4/149.5 |
| R805 | 7030003370 | S.RES ERJ3GEYJ 271 V (270) | T | 81.5/158.7 |
| R806 | 7030003230 | S.RES ERJ3GEYJ 180 V (18) | T | 84.3/158.7 |
| R807 | 7030003370 | S.RES ERJ3GEYJ 271 V (270) | T | 87.1/158.7 |
| R812 | 7030007230 | S.RES ERA3YED 102V (1K) | T | 73.9/177.6 |
| R814 | 7030005321 | S.RES ERA3YED 103V (10K) | T | 75.2/177.6 |
| R815 | 7030003320 | S.RES ERJ3GEYJ 101 V (100) | T | 79.6/173.6 |
| R831 | 7030003330 | S.RES ERJ3GEYJ 121 V (120) | B | 85.6/180.0 |
| R832 | 7030003290 | S.RES ERJ3GEYJ 560 V (56) | B | 88.5/177.2 |
| R833 | 7030003330 | S.RES ERJ3GEYJ 121 V (120) | B | 89.3/174.6 |
| R834 | 7030003380 | S.RES ERJ3GEYJ 331 V (330) | T | 91.6/155.7 |
| R835 | 7030003320 | S.RES ERJ3GEYJ 101 V (100) | T | 94.4/155.7 |
| R836 | 7030003380 | S.RES ERJ3GEYJ 331 V (330) | T | 88.8/145.4 |
| R837 | 7030003220 | S.RES ERJ3GEYJ 150 V (15) | T | 91.6/145.4 |
| R838 | 7030003380 | S.RES ERJ3GEYJ 331 V (330) | T | 94.4/145.4 |
| R839 | 7030005321 | S.RES ERA3YED 103V (10K) | B | 77.9/171.0 |
| R840 | 7030003540 | S.RES ERJ3GEYJ 682 V (6.8K) | B | 74.5/165.7 |

Eqv.= This component is equivalent to the REF No. component listed above, and may be substituted on parts orders and repairs.

M.=Mounted side (T: Mounted on the Top side, B: Mounted on the Bottom side)
S.=Surface mount

## [RXPLL-A UNIT]

| REF NO. | PARTS NO. | DESCRIPTION | M. | H/V LOCATION |
|---|---|---|---|---|
| R1000 | 7030003320 | S.RES ERJ3GEYJ 101 V (100) | B | 177.2/11.2 |
| R1001 | 7030003640 | S.RES ERJ3GEYJ 473 V (47K) | T | 182.8/63.5 |
| R1002 | 7030003480 | S.RES ERJ3GEYJ 222 V (2.2K) | T | 183.5/65.7 |
| R1003 | 7030010980 | S.RES ERA3YHD 470V (47) | T | 162.0/13.4 |
| R1004 | 7030007230 | S.RES ERA3YED 102V (1K) | B | 166.4/12.9 |
| R1005 | 7030003550 | S.RES ERJ3GEYJ 822 V (8.2K) | T | 144.0/26.1 |
| R1006 | 7030007230 | S.RES ERA3YED 102V (1K) | T | 145.3/26.1 |
| R1007 | 7030004030 | S.RES ERJ3GEYJ 5R6 V (5.6) | B | 153.7/33.7 |
| R1008 | 7030003240 | S.RES ERJ3GEYJ 220 V (22) | T | 144.0/36.4 |
| R1009 | 7030010980 | S.RES ERA3YHD 470V (47) | T | 182.4/29.3 |
| R1010 | 7030010980 | S.RES ERA3YHD 470V (47) | T | 154.5/33.2 |
| R1013 | 7030007230 | S.RES ERA3YED 102V (1K) | B | 172.7/40.8 |
| R1014 | 7030007230 | S.RES ERA3YED 102V (1K) | B | 156.7/40.8 |
| R1015 | 7030003530 | S.RES ERJ3GEYJ 562 V (5.6K) | B | 172.7/45.4 |
| R1016 | 7030003530 | S.RES ERJ3GEYJ 562 V (5.6K) | B | 156.7/45.4 |
| R1017 | 7030003530 | S.RES ERJ3GEYJ 562 V (5.6K) | B | 169.7/12.9 |
| R1018 | 7030003650 | S.RES ERJ3GEYJ 563 V (56K) | B | 181.1/62.4 |
| R1019 | 7030005321 | S.RES ERA3YED 103V (10K) | B | 181.9/65.0 |
| R1020 | 7030003390 | S.RES ERJ3GEYJ 391 V (390) | T | 179.6/18.4 |
| R1021 | 7030003220 | S.RES ERJ3GEYJ 150 V (15) | T | 177.0/19.4 |
| R1022 | 7030003390 | S.RES ERJ3GEYJ 391 V (390) | T | 180.9/19.4 |
| R1023 | 7030010980 | S.RES ERA3YHD 470V (47) | B | 149.4/33.5 |
| R1024 | 7030003200 | S.RES ERJ3GEYJ 100 V (10) | B | 150.2/31.4 |
| R1025 | 7030003300 | S.RES ERJ3GEYJ 680 V (68) | T | 178.3/19.4 |
| R1026 | 7030003480 | S.RES ERJ3GEYJ 222 V (2.2K) | B | 171.2/14.2 |
| R1027 | 7030003200 | S.RES ERJ3GEYJ 100 V (10) | B | 176.5/38.3 |
| R1028 | 7030003200 | S.RES ERJ3GEYJ 100 V (10) | B | 160.5/38.3 |
| R1029 | 7030010980 | S.RES ERA3YHD 470V (47) | B | 178.3/46.2 |
| R1030 | 7030010980 | S.RES ERA3YHD 470V (47) | B | 162.3/46.2 |
| R1051 | 7030003800 | S.RES ERJ3GEYJ 105 V (1M) | T | 178.6/93.1 |
| R1054 | 7030011500 | S.RES ERA3YHD 270V (27) | T | 149.2/83.2 |
| R1055 | 7030000010 | S.RES MCR10EZHJ JPW (000) | T | 162.1/76.6 |
| R1056 | 7030000010 | S.RES MCR10EZHJ JPW (000) | T | 177.5/71.1 |
| R1071 | 7030010980 | S.RES ERA3YHD 470V (47) | B | 165.9/76.5 |
| R1072 | 7030000010 | S.RES MCR10EZHJ JPW (000) | T | 134.0/84.2 |
| R1073 | 7030000010 | S.RES MCR10EZHJ JPW (000) | T | 135.5/85.7 |
| R1101 | 7310004860 | S.TRI EVM-3YSX50 B53 (502) | T | 180.1/90.2 |
| R1102 | 7030005871 | S.RES ERA3YKD 104V (100K) | B | 180.2/100.6 |
| R1103 | 7030007680 | S.RES ERJ8ENF 47R0V (47) | T | 181.7/104.7 |
| R1104 | 7030007680 | S.RES ERJ8ENF 47R0V (47) | T | 173.6/107.2 |
| R1105 | 7030003500 | S.RES ERJ3GEYJ 332 V (3.3K) | T | 176.7/87.7 |
| R1106 | 7030009620 | S.RES ERJ12YJ120U (12) | B | 179.6/117.9 |
| R1107 | 7030010980 | S.RES ERA3YHD 470V (47) | T | 175.6/120.3 |
| R1109 | 7030007180 | S.RES ERJ12YJ150U (15) | B | 176.6/125.7 |
| R1110 | 7030003480 | S.RES ERJ3GEYJ 222 V (2.2K) | B | 168.5/131.7 |
| R1111 | 7030003480 | S.RES ERJ3GEYJ 222 V (2.2K) | T | 166.2/130.4 |
| R1113 | 7030003480 | S.RES ERJ3GEYJ 222 V (2.2K) | T | 166.2/131.7 |
| R1114 | 7030004040 | S.RES ERJ3GEYJ 4R7 V (4.7) | T | 179.3/125.3 |
| R1115 | 7030006240 | S.RES ERJ12YJ181U (180) | B | 176.6/130.0 |
| R1116 | 7030007230 | S.RES ERA3YED 102V (1K) | T | 175.7/135.3 |
| R1117 | 7030004040 | S.RES ERJ3GEYJ 4R7 V (4.7) | T | 175.7/134.0 |
| R1118 | 7030003480 | S.RES ERJ3GEYJ 222 V (2.2K) | T | 175.4/132.0 |
| R1119 | 7030003470 | S.RES ERJ3GEYJ 182 V (1.8K) | T | 178.0/132.0 |
| R1120 | 7030006070 | S.RES ERJ12YJ101U (100) | B | 177.4/141.0 |
| R1121 | 7030003240 | S.RES ERJ3GEYJ 220 V (22) | T | 178.6/139.6 |
| R1122 | 7030010980 | S.RES ERA3YHD 470V (47) | T | 172.0/131.1 |
| R1123 | 7030003480 | S.RES ERJ3GEYJ 222 V (2.2K) | T | 165.7/137.4 |
| R1124 | 7030003460 | S.RES ERJ3GEYJ 152 V (1.5K) | T | 165.7/140.0 |
| R1125 | 7030003420 | S.RES ERJ3GEYJ 681 V (680) | B | 171.0/142.2 |
| R1126 | 7030003200 | S.RES ERJ3GEYJ 100 V (10) | T | 168.4/142.2 |
| R1127 | 7030010980 | S.RES ERA3YHD 470V (47) | T | 174.6/142.9 |
| R1128 | 7030003470 | S.RES ERJ3GEYJ 182 V (1.8K) | T | 174.7/146.6 |
| R1129 | 7030003470 | S.RES ERJ3GEYJ 182 V (1.8K) | T | 174.7/148.4 |
| R1130 | 7030003480 | S.RES ERJ3GEYJ 222 V (2.2K) | T | 180.6/146.4 |
| R1131 | 7030003640 | S.RES ERJ3GEYJ 473 V (47K) | B | 177.4/90.8 |
| R1132 | 7310004860 | S.TRI EVM-3YSX50 B53 (502) | T | 179.4/84.3 |
| R1133 | 7030003500 | S.RES ERJ3GEYJ 332 V (3.3K) | T | 175.5/82.5 |
| R1134 | 7030003640 | S.RES ERJ3GEYJ 473 V (47K) | T | 175.5/83.8 |
| R1135 | 7030005871 | S.RES ERA3YKD 104V (100K) | T | 182.2/97.9 |
| R1151 | 7030003280 | S.RES ERJ3GEYJ 470 V (47) | T | 134.8/64.0 |
| R1152 | 7030003280 | S.RES ERJ3GEYJ 470 V (47) | B | 117.3/56.3 |
| R1203 | 7030000010 | S.RES MCR10EZHJ JPW (000) | T | 157.5/74.9 |
| R1208 | 7030003480 | S.RES ERJ3GEYJ 222 V (2.2K) | T | 138.4/53.9 |
| R1209 | 7030005321 | S.RES ERA3YED 103V (10K) | T | 139.1/51.9 |
| R1210 | 7030003650 | S.RES ERJ3GEYJ 563 V (56K) | B | 142.5/44.4 |
| R1211 | 7030003860 | S.RES ERJ3GE JPW V | T | 117.6/7.9 |
| R1212 | 7030003860 | S.RES ERJ3GE JPW V | T | 124.9/51.1 |
| R1213 | 7030003200 | S.RES ERJ3GEYJ 100 V (10) | B | 118.9/25.0 |
| R1214 | 7030003200 | S.RES ERJ3GEYJ 100 V (10) | B | 109.1/25.0 |
| R1216 | 7030010980 | S.RES ERA3YHD 470V (47) | B | 120.8/31.7 |
| R1217 | 7030010980 | S.RES ERA3YHD 470V (47) | B | 111.3/31.7 |
| R1220 | 7030010980 | S.RES ERA3YHD 470V (47) | T | 118.8/17.3 |
| R1221 | 7030007230 | S.RES ERA3YED 102V (1K) | T | 116.4/39.9 |
| R1222 | 7030003530 | S.RES ERJ3GEYJ 562 V (5.6K) | T | 116.4/38.6 |
| R1223 | 7030010980 | S.RES ERA3YHD 470V (47) | T | 109.3/17.1 |
| R1224 | 7030007230 | S.RES ERA3YED 102V (1K) | T | 106.6/39.9 |
| R1225 | 7030003530 | S.RES ERJ3GEYJ 562 V (5.6K) | T | 106.6/38.6 |
| R1226 | 7030003410 | S.RES ERJ3GEYJ 561 V (560) | T | 158.9/92.9 |
| R1227 | 7030003410 | S.RES ERJ3GEYJ 561 V (560) | T | 154.0/92.9 |
| R1228 | 7310004860 | S.TRI EVM-3YSX50 B53 (502) | T | 156.5/92.9 |
| R1229 | 7030003480 | S.RES ERJ3GEYJ 222 V (2.2K) | B | 156.2/117.5 |
| R1230 | 7030003480 | S.RES ERJ3GEYJ 222 V (2.2K) | B | 156.2/119.3 |
| R1231 | 7030003480 | S.RES ERJ3GEYJ 222 V (2.2K) | B | 156.2/121.1 |
| R1232 | 7030003600 | S.RES ERJ3GEYJ 223 V (22K) | T | 156.3/97.5 |
| R1233 | 7030010980 | S.RES ERA3YHD 470V (47) | B | 152.5/109.5 |
| R1301 | 7030010980 | S.RES ERA3YHD 470V (47) | B | 155.8/97.5 |
| R1302 | 7030003860 | S.RES ERJ3GE JPW V | T | 159.3/116.8 |
| R1304 | 7030003620 | S.RES ERJ3GEYJ 333 V (33K) | T | 156.5/123.2 |
| R1306 | 7030006230 | S.RES ERJ12YJ151U (150) | B | 153.8/124.8 |
| R1307 | 7030003300 | S.RES ERJ3GEYJ 680 V (68) | T | 156.5/128.4 |
| R1311 | 7030000010 | S.RES MCR10EZHJ JPW (000) | T | 140.3/98.9 |
| R1312 | 7030000010 | S.RES MCR10EZHJ JPW (000) | T | 143.2/104.1 |
| R1313 | 7030000010 | S.RES MCR10EZHJ JPW (000) | T | 143.2/101.6 |
| R1357 | 7030007230 | S.RES ERA3YED 102V (1K) | B | 140.7/70.5 |
| R1358 | 7030003530 | S.RES ERJ3GEYJ 562 V (5.6K) | B | 142.8/70.5 |

## [RXPLL-A UNIT]

| REF NO. | PARTS NO. | DESCRIPTION | M. | H/V LOCATION |
|---|---|---|---|---|
| R1359 | 7030010980 | S.RES ERA3YHD 470V (47) | T | 139.5/64.7 |
| R1360 | 7030007230 | S.RES ERA3YED 102V (1K) | B | 146.4/67.2 |
| R1361 | 7030003380 | S.RES ERJ3GEYJ 331 V (330) | T | 139.3/68.8 |
| R1362 | 7030005871 | S.RES ERA3YKD 104V (100K) | B | 144.6/70.5 |
| R1401 | 7030003200 | S.RES ERJ3GEYJ 100 V (10) | T | 131.5/103.4 |
| R1402 | 7030003300 | S.RES ERJ3GEYJ 680 V (68) | T | 126.4/111.0 |
| R1403 | 7030007230 | S.RES ERA3YED 102V (1K) | T | 132.0/107.7 |
| R1404 | 7030009861 | S.RES ERA3YED 471V (470) | T | 134.7/104.3 |
| R1405 | 7030003340 | S.RES ERJ3GEYJ 151 V (150) | T | 137.3/104.3 |
| R1406 | 7030009591 | S.RES ERA3YED 472V (4.7K) | T | 135.2/106.3 |
| R1407 | 7030003550 | S.RES ERJ3GEYJ 822 V (8.2K) | B | 135.5/104.4 |
| R1408 | 7030003200 | S.RES ERJ3GEYJ 100 V (10) | T | 121.0/109.0 |
| R1409 | 7030009591 | S.RES ERA3YED 472V (4.7K) | T | 120.6/114.9 |
| R1410 | 7030006091 | S.RES ERA3YED 822V (8.2K) | B | 124.2/114.4 |
| R1411 | 7030005871 | S.RES ERA3YKD 104V (100K) | T | 123.3/116.2 |
| R1412 | 7030003200 | S.RES ERJ3GEYJ 100 V (10) | T | 126.4/112.3 |
| R1413 | 7030003200 | S.RES ERJ3GEYJ 100 V (10) | T | 126.4/113.6 |
| R1414 | 7030005871 | S.RES ERA3YKD 104V (100K) | B | 120.9/114.4 |
| R1415 | 7030010980 | S.RES ERA3YHD 470V (47) | T | 127.1/114.9 |
| R1416 | 7030003320 | S.RES ERJ3GEYJ 101 V (100) | B | 139.7/123.0 |
| R1417 | 7030000010 | S.RES MCR10EZHJ JPW (000) | B | 130.1/124.5 |
| R1418 | 7030000010 | S.RES MCR10EZHJ JPW (000) | B | 130.1/122.6 |
| R1419 | 7030003860 | S.RES ERJ3GE JPW V | B | 129.5/114.9 |
| R1501 | 7030010980 | S.RES ERA3YHD 470V (47) | T | 126.5/125.3 |
| R1502 | 7030009841 | S.RES ERA3YHD 330V (33) | T | 133.1/131.1 |
| R1503 | 7030009851 | S.RES ERA3YED 271V (270) | T | 130.0/146.3 |
| R1504 | 7030011050 | S.RES ERA3YHD 100V (10) | T | 131.3/143.5 |
| R1505 | 7030006091 | S.RES ERA3YED 822V (8.2K) | B | 137.7/140.3 |
| R1506 | 7030007230 | S.RES ERA3YED 102V (1K) | B | 137.7/147.0 |
| R1507 | 7030007230 | S.RES ERA3YED 102V (1K) | T | 132.6/146.3 |
| R1508 | 7030007230 | S.RES ERA3YED 102V (1K) | T | 133.9/146.3 |
| R1509 | 7030007230 | S.RES ERA3YED 102V (1K) | T | 139.1/158.9 |
| R1510 | 7030005321 | S.RES ERA3YED 103V (10K) | T | 139.1/157.6 |
| R1511 | 7030009861 | S.RES ERA3YED 471V (470) | T | 136.5/157.6 |
| R1512 | 7030003380 | S.RES ERJ3GEYJ 331 V (330) | T | 129.6/151.6 |
| R1513 | 7030003380 | S.RES ERJ3GEYJ 331 V (330) | T | 129.6/155.5 |
| R1514 | 7030005321 | S.RES ERA3YED 103V (10K) | T | 129.6/160.8 |
| R1515 | 7030005321 | S.RES ERA3YED 103V (10K) | T | 133.5/160.8 |
| R1516 | 7310005380 | S.TRI EVM3VB13 1K (1K) | T | 119.2/157.7 |
| R1517 | 7030005321 | S.RES ERA3YED 103V (10K) | T | 115.3/158.0 |
| R1518 | 7030005321 | S.RES ERA3YED 103V (10K) | T | 134.8/160.8 |
| R1519 | 7030005321 | S.RES ERA3YED 103V (10K) | T | 131.7/171.7 |
| R1520 | 7030005321 | S.RES ERA3YED 103V (10K) | T | 136.1/160.8 |
| R1521 | 7030010980 | S.RES ERA3YHD 470V (47) | T | 126.6/133.0 |
| R1522 | 7030009841 | S.RES ERA3YHD 330V (33) | T | 126.1/141.2 |
| R1523 | 7030009851 | S.RES ERA3YED 271V (270) | T | 123.7/146.3 |
| R1524 | 7030011050 | S.RES ERA3YHD 100V (10) | T | 122.4/143.5 |
| R1525 | 7030007230 | S.RES ERA3YED 102V (1K) | B | 128.8/147.0 |
| R1526 | 7030003460 | S.RES ERJ3GEYJ 152 V (1.5K) | B | 137.7/142.1 |
| R1527 | 7030007230 | S.RES ERA3YED 102V (1K) | T | 119.8/146.3 |
| R1528 | 7030007230 | S.RES ERA3YED 102V (1K) | T | 121.1/146.3 |
| R1529 | 7030007230 | S.RES ERA3YED 102V (1K) | T | 115.3/152.3 |
| R1530 | 7030003380 | S.RES ERJ3GEYJ 331 V (330) | T | 128.0/151.6 |
| R1531 | 7030003380 | S.RES ERJ3GEYJ 331 V (330) | T | 128.0/155.5 |
| R1532 | 7030005321 | S.RES ERA3YED 103V (10K) | T | 124.1/160.8 |
| R1533 | 7030005321 | S.RES ERA3YED 103V (10K) | T | 128.0/160.8 |
| R1534 | 7030005321 | S.RES ERA3YED 103V (10K) | T | 122.8/160.8 |
| R1535 | 7030005321 | S.RES ERA3YED 103V (10K) | T | 121.5/160.8 |
| R1536 | 7030005321 | S.RES ERA3YED 103V (10K) | T | 129.0/171.7 |
| R1537 | 7030003320 | S.RES ERJ3GEYJ 101 V (100) | T | 115.5/164.5 |
| R1538 | 7030003320 | S.RES ERJ3GEYJ 101 V (100) | T | 107.1/170.1 |
| R1539 | 7030008061 | S.RES ERA3YED 222V (2.2K) | B | 131.8/176.4 |
| R1540 | 7030010390 | S.RES ERA3YED 821V (820) | B | 128.7/177.1 |
| R1541 | 7030003320 | S.RES ERJ3GEYJ 101 V (100) | T | 107.1/178.8 |
| R1542 | 7030003320 | S.RES ERJ3GEYJ 101 V (100) | T | 115.5/173.2 |
| R1543 | 7030009691 | S.RES ERA3YED 101V (100) | B | 130.6/179.0 |
| R1651 | 7030003380 | S.RES ERJ3GEYJ 331 V (330) | B | 101.0/144.8 |
| R1652 | 7030003220 | S.RES ERJ3GEYJ 150 V (15) | B | 102.7/144.8 |
| R1653 | 7030003380 | S.RES ERJ3GEYJ 331 V (330) | B | 102.0/143.0 |
| R1654 | 7030010980 | S.RES ERA3YHD 470V (47) | B | 105.5/142.3 |
| R1655 | 7030009861 | S.RES ERA3YED 471V (470) | B | 108.9/140.1 |
| R1656 | 7030003630 | S.RES ERJ3GEYJ 393 V (39K) | B | 108.3/142.3 |
| R1657 | 7030005871 | S.RES ERA3YKD 104V (100K) | T | 108.0/133.2 |
| R1658 | 7030003320 | S.RES ERJ3GEYJ 101 V (100) | T | 110.6/133.2 |
| R1659 | 7030009691 | S.RES ERA3YED 101V (100) | T | 115.9/125.0 |
| R1660 | 7030009691 | S.RES ERA3YED 101V (100) | T | 115.9/128.8 |
| R1661 | 7030005321 | S.RES ERA3YED 103V (10K) | T | 135.1/175.4 |
| R1662 | 7030005321 | S.RES ERA3YED 103V (10K) | T | 135.2/172.8 |
| R1663 | 7030005321 | S.RES ERA3YED 103V (10K) | T | 144.3/175.4 |
| R1664 | 7030005321 | S.RES ERA3YED 103V (10K) | T | 139.9/172.1 |
| R1665 | 7030003320 | S.RES ERJ3GEYJ 101 V (100) | T | 109.3/133.2 |
| R1667 | 7030003360 | S.RES ERJ3GEYJ 221 V (220) | T | 139.2/170.2 |
| R1668 | 7030003360 | S.RES ERJ3GEYJ 221 V (220) | T | 141.8/170.2 |
| R1670 | 7030003800 | S.RES ERJ3GEYJ 105 V (1M) | T | 140.2/164.1 |
| R1673 | 7030007230 | S.RES ERA3YED 102V (1K) | B | 146.0/174.5 |
| R1674 | 7030003370 | S.RES ERJ3GEYJ 271 V (270) | B | 145.1/177.1 |
| R1675 | 7030009591 | S.RES ERA3YED 472V (4.7K) | T | 136.6/170.2 |
| R1677 | 7030009591 | S.RES ERA3YED 472V (4.7K) | T | 143.1/170.2 |
| R1701 | 7030003360 | S.RES ERJ3GEYJ 221 V (220) | T | 162.4/147.4 |
| R1703 | 7030003360 | S.RES ERJ3GEYJ 221 V (220) | T | 159.8/147.4 |
| R1704 | 7030003360 | S.RES ERJ3GEYJ 221 V (220) | T | 158.5/147.4 |
| R1706 | 7030003360 | S.RES ERJ3GEYJ 221 V (220) | T | 155.9/147.4 |
| R1707 | 7030003360 | S.RES ERJ3GEYJ 221 V (220) | T | 154.6/147.4 |
| R1708 | 7030003360 | S.RES ERJ3GEYJ 221 V (220) | T | 153.3/147.4 |
| R1709 | 7030003480 | S.RES ERJ3GEYJ 222 V (2.2K) | T | 149.7/159.3 |
| R1710 | 7030003480 | S.RES ERJ3GEYJ 222 V (2.2K) | T | 148.4/159.3 |
| R1711 | 7030003540 | S.RES ERJ3GEYJ 682 V (6.8K) | T | 147.1/159.3 |
| R1712 | 7030003540 | S.RES ERJ3GEYJ 682 V (6.8K) | T | 145.8/159.3 |
| R1713 | 7030003660 | S.RES ERJ3GEYJ 683 V (68K) | T | 145.8/157.2 |
| R1714 | 7030003660 | S.RES ERJ3GEYJ 683 V (68K) | T | 145.8/155.9 |
| R1715 | 7030003540 | S.RES ERJ3GEYJ 682 V (6.8K) | T | 143.9/164.9 |
| R1716 | 7030007230 | S.RES ERA3YED 102V (1K) | T | 164.2/164.8 |
| R1717 | 7030007230 | S.RES ERA3YED 102V (1K) | T | 164.2/163.5 |
| R1718 | 7030007230 | S.RES ERA3YED 102V (1K) | T | 164.2/162.2 |
| R1719 | 7030003660 | S.RES ERJ3GEYJ 683 V (68K) | T | 144.4/166.8 |

Eqv.= This component is equivalent to the REF No. component listed above, and may be substituted on parts orders and repairs.

M.=Mounted side (T: Mounted on the Top side, B: Mounted on the Bottom side)
S.=Surface mount

## [RXPLL-A UNIT]

| REF NO. | PARTS NO. | DESCRIPTION | M. | H/V LOCATION |
|---|---|---|---|---|
| C1 | 4030011600 | S.CER C1608 JB 1E 104K-T | T | 10.8/18.2 |
| C2 | 4030006880 | S.CER C1608 JB 1H 472K-T | T | 25.7/29.5 |
| C14 | 4030006880 | S.CER C1608 JB 1H 472K-T | T | 37.7/12.5 |
| C15 | 4030006880 | S.CER C1608 JB 1H 472K-T | T | 31.2/15.4 |
| C16 | 4030006880 | S.CER C1608 JB 1H 472K-T | T | 35.1/15.4 |
| C17 | 4030006880 | S.CER C1608 JB 1H 472K-T | T | 13.8/12.6 |
| C18 | 4030006880 | S.CER C1608 JB 1H 472K-T | T | 16.8/12.6 |
| C19 | 4030006880 | S.CER C1608 JB 1H 472K-T | T | 29.5/12.6 |
| C20 | 4030006880 | S.CER C1608 JB 1H 472K-T | T | 87.4/127.9 |
| C21 | 4030006880 | S.CER C1608 JB 1H 472K-T | T | 88.7/127.9 |
| C22 | 4030006880 | S.CER C1608 JB 1H 472K-T | T | 90.0/127.9 |
| C30 | 4030011600 | S.CER C1608 JB 1E 104K-T | T | 19.1/112.4 |
| C31 | 4030011600 | S.CER C1608 JB 1E 104K-T | T | 20.4/113.7 |
| C32 | 4030011600 | S.CER C1608 JB 1E 104K-T | T | 24.3/111.1 |
| C51 | 4510008520 | S.ELE EEE1CA470SP | T | 84.0/20.3 |
| C52 | 4030011600 | S.CER C1608 JB 1E 104K-T | T | 78.9/23.7 |
| C53 | 4030011600 | S.CER C1608 JB 1E 104K-T | T | 75.1/23.7 |
| C54 | 4510008500 | S.ELE EEE1CA101WP | T | 70.0/20.3 |
| C61 | 4510008520 | S.ELE EEE1CA470SP | T | 62.9/20.3 |
| C62 | 4030011600 | S.CER C1608 JB 1E 104K-T | B | 58.2/19.9 |
| C63 | 4030011600 | S.CER C1608 JB 1E 104K-T | B | 54.8/19.9 |
| C64 | 4510008500 | S.ELE EEE1CA101WP | T | 50.1/20.3 |
| C101 | 4030006880 | S.CER C1608 JB 1H 472K-T | T | 39.7/80.7 |
| C102 | 4030011600 | S.CER C1608 JB 1E 104K-T | T | 41.8/79.9 |
| C103 | 4510008540 | S.ELE EEE1CA100SR | T | 40.2/76.8 |
| C104 | 4030011600 | S.CER C1608 JB 1E 104K-T | T | 21.4/100.2 |
| C105 | 4030011600 | S.CER C1608 JB 1E 104K-T | T | 21.4/88.2 |
| C106 | 4030011600 | S.CER C1608 JB 1E 104K-T | T | 21.4/84.4 |
| C107 | 4030011600 | S.CER C1608 JB 1E 104K-T | T | 24.4/79.8 |
| C108 | 4030011600 | S.CER C1608 JB 1E 104K-T | T | 27.0/79.8 |
| C109 | 4030011600 | S.CER C1608 JB 1E 104K-T | T | 30.8/79.8 |
| C110 | 4030011600 | S.CER C1608 JB 1E 104K-T | T | 36.8/79.8 |
| C111 | 4030011600 | S.CER C1608 JB 1E 104K-T | T | 41.2/88.5 |
| C112 | 4030011600 | S.CER C1608 JB 1E 104K-T | T | 41.3/82.6 |
| C114 | 4030011600 | S.CER C1608 JB 1E 104K-T | T | 39.6/98.5 |
| C115 | 4030011600 | S.CER C1608 JB 1E 104K-T | T | 38.2/98.5 |
| C116 | 4030011600 | S.CER C1608 JB 1E 104K-T | T | 35.3/99.7 |
| C117 | 4030011600 | S.CER C1608 JB 1E 104K-T | T | 23.3/98.8 |
| C118 | 4030011600 | S.CER C1608 JB 1E 104K-T | T | 42.6/82.6 |
| C119 | 4030011600 | S.CER C1608 JB 1E 104K-T | B | 31.2/86.7 |
| C120 | 4030006880 | S.CER C1608 JB 1H 472K-T | T | 36.8/101.5 |
| C121 | 4030011600 | S.CER C1608 JB 1E 104K-T | T | 39.6/101.5 |
| C125 | 4030011600 | S.CER C1608 JB 1E 104K-T | T | 14.6/83.1 |
| C129 | 4030011600 | S.CER C1608 JB 1E 104K-T | T | 33.4/79.8 |
| C130 | 4030017810 | S.CER C1608 CH 1H 102J-T | B | 47.6/106.6 |
| C131 | 4030011600 | S.CER C1608 JB 1E 104K-T | T | 30.4/73.2 |
| C132 | 4030011600 | S.CER C1608 JB 1E 104K-T | T | 35.5/73.2 |
| C133 | 4030006880 | S.CER C1608 JB 1H 472K-T | B | 43.5/98.6 |
| C134 | 4030006880 | S.CER C1608 JB 1H 472K-T | B | 43.5/96.8 |
| C135 | 4030006880 | S.CER C1608 JB 1H 472K-T | T | 46.1/95.5 |
| C136 | 4030006880 | S.CER C1608 JB 1H 472K-T | T | 46.1/94.2 |
| C137 | 4030006880 | S.CER C1608 JB 1H 472K-T | T | 46.1/90.3 |
| C138 | 4030006880 | S.CER C1608 JB 1H 472K-T | T | 46.2/87.7 |
| C139 | 4030006880 | S.CER C1608 JB 1H 472K-T | B | 43.5/100.4 |
| C140 | 4030006880 | S.CER C1608 JB 1H 472K-T | B | 43.5/102.2 |
| C141 | 4030004740 | S.CER C2012 JB 1H 472K-T | B | 34.4/85.2 |
| C142 | 4550007470 | S.TAN F931A107MNMBMA | B | 19.5/87.5 |
| C150 | 4340000050 | S.MYL ECH-U 1C472JB5 | T | 16.4/64.6 |
| C151 | 4550007520 | S.TAN F931A106MAABMA | B | 38.6/92.1 |
| C152 | 4030007070 | S.CER C1608 CH 1H 330J-T | T | 19.2/59.9 |
| C153 | 4030009910 | S.CER C1608 CH 1H 040B-T | T | 21.3/55.4 |
| C154 | 4610001850 | S.TRI TZB4R200AB10R00 (TZBX4R200BA110) | T | 17.6/55.1 |
| C155 | 4030016550 | S.CER CM105 CH 151G 50AT | T | 24.1/55.4 |
| C156 | 4030016550 | S.CER CM105 CH 151G 50AT | T | 26.9/55.4 |
| C157 | 4030016550 | S.CER CM105 CH 151G 50AT | T | 26.9/56.7 |
| C158 | 4030006880 | S.CER C1608 JB 1H 472K-T | T | 23.3/53.1 |
| C159 | 4030006880 | S.CER C1608 JB 1H 472K-T | B | 23.0/51.9 |
| C161 | 4510008540 | S.ELE EEE1CA100SR | T | 31.3/61.0 |
| C162 | 4030009920 | S.CER C1608 CH 1H 050B-T | B | 33.6/53.0 |
| C163 | 4030011600 | S.CER C1608 JB 1E 104K-T | B | 36.9/59.6 |
| C164 | 4030006880 | S.CER C1608 JB 1H 472K-T | B | 30.3/54.8 |
| C165 | 4030006880 | S.CER C1608 JB 1H 472K-T | B | 30.8/74.0 |
| C166 | 4030011600 | S.CER C1608 JB 1E 104K-T | B | 34.9/78.3 |
| C167 | 4030006880 | S.CER C1608 JB 1H 472K-T | B | 37.4/74.0 |
| C201 | 4030011340 | S.CER C1608 CH 1H 471J-T | T | 33.8/40.5 |
| C202 | 4510009280 | S.ELE EEE1EA4R7SR | T | 26.5/44.0 |
| C203 | 4030006900 | S.CER C1608 JB 1H 103K-T | T | 32.5/38.3 |
| C204 | 4030006880 | S.CER C1608 JB 1H 472K-T | T | 25.4/35.3 |
| C205 | 4030006880 | S.CER C1608 JB 1H 472K-T | T | 25.4/34.0 |
| C206 | 4030006880 | S.CER C1608 JB 1H 472K-T | T | 31.1/43.0 |
| C207 | 4030007030 | S.CER C1608 CH 1H 150J-T | B | 46.8/32.4 |
| C208 | 4030007030 | S.CER C1608 CH 1H 150J-T | T | 32.5/41.0 |
| C209 | 4030011340 | S.CER C1608 CH 1H 471J-T | T | 44.1/26.1 |
| C210 | 4550008150 | S.TAN F921V224MAA | T | 46.2/26.7 |
| Eqv. | 4550000550 | S.TAN TEESVA 1V 224M8R | | |
| C211 | 4550007300 | S.TAN F931A335MAABMA | B | 46.1/41.6 |
| C219 | 4030006880 | S.CER C1608 JB 1H 472K-T | T | 33.8/37.8 |
| C220 | 4030007130 | S.CER C1608 CH 1H 101J-T | T | 54.7/37.6 |
| C221 | 4030009910 | S.CER C1608 CH 1H 040B-T | T | 54.7/32.0 |
| C222 | 4610001860 | S.TRI TZB4Z060AB10R00 (TZBX4Z060BA110) | T | 68.1/32.6 |
| C223 | 4030007080 | S.CER C1608 CH 1H 390J-T | T | 73.2/36.3 |
| C224 | 4030007010 | S.CER C1608 CH 1H 100D-T | T | 73.2/38.9 |
| C225 | 4030007050 | S.CER C1608 CH 1H 220J-T | T | 73.6/30.9 |
| C226 | 4030006880 | S.CER C1608 JB 1H 472K-T | T | 71.0/30.9 |
| C227 | 4030009920 | S.CER C1608 CH 1H 050B-T | T | 75.1/32.6 |
| C228 | 4510008540 | S.ELE EEE1CA100SR | T | 68.8/37.8 |
| C229 | 4030009530 | S.CER C1608 CH 1H 030B-T | T | 77.8/32.6 |
| C230 | 4030007100 | S.CER C1608 CH 1H 560J-T | T | 54.7/50.0 |
| C231 | 4030009520 | S.CER C1608 CH 1H 020B-T | T | 54.7/44.6 |
| C232 | 4610001860 | S.TRI TZB4Z060AB10R00 (TZBX4Z060BA110) | T | 68.1/45.1 |
| C233 | 4030007070 | S.CER C1608 CH 1H 330J-T | T | 73.2/48.8 |
| C234 | 4030009920 | S.CER C1608 CH 1H 050B-T | T | 73.2/51.4 |

## [RXPLL-A UNIT]

| REF NO. | PARTS NO. | DESCRIPTION | M. | H/V LOCATION |
|---|---|---|---|---|
| C235 | 4030007020 | S.CER C1608 CH 1H 120J-T | T | 73.6/43.3 |
| C236 | 4030006880 | S.CER C1608 JB 1H 472K-T | T | 71.0/43.3 |
| C237 | 4030009910 | S.CER C1608 CH 1H 040B-T | T | 75.1/45.0 |
| C238 | 4510008540 | S.ELE EEE1CA100SR | T | 68.8/50.3 |
| C239 | 4030009910 | S.CER C1608 CH 1H 040B-T | T | 77.8/45.0 |
| C240 | 4030007080 | S.CER C1608 CH 1H 390J-T | T | 54.7/62.5 |
| C241 | 4030009510 | S.CER C1608 CH 1H 010B-T | T | 54.7/57.1 |
| C242 | 4610001860 | S.TRI TZB4Z060AB10R00 (TZBX4Z060BA110) | T | 68.1/57.6 |
| C243 | 4030007060 | S.CER C1608 CH 1H 270J-T | T | 73.2/61.3 |
| C244 | 4030009910 | S.CER C1608 CH 1H 040B-T | T | 73.2/63.9 |
| C245 | 4030009920 | S.CER C1608 CH 1H 050B-T | T | 73.6/55.8 |
| C246 | 4030006880 | S.CER C1608 JB 1H 472K-T | T | 71.0/55.9 |
| C247 | 4030009530 | S.CER C1608 CH 1H 030B-T | T | 75.1/57.5 |
| C248 | 4510008540 | S.ELE EEE1CA100SR | T | 68.8/62.9 |
| C250 | 4030007100 | S.CER C1608 CH 1H 560J-T | T | 54.7/75.0 |
| C251 | 4030009540 | S.CER C1608 CH 1H 1R5B-T | T | 54.7/69.6 |
| C252 | 4610001810 | S.TRI TZB4Z030AB10R00 (TZBX4Z030BA110) | T | 68.1/70.1 |
| C253 | 4030007080 | S.CER C1608 CH 1H 390J-T | T | 73.2/73.8 |
| C254 | 4030009530 | S.CER C1608 CH 1H 030B-T | T | 73.2/76.4 |
| C255 | 4030006990 | S.CER C1608 CH 1H 080D-T | T | 73.6/68.4 |
| C256 | 4030006880 | S.CER C1608 JB 1H 472K-T | T | 71.0/68.4 |
| C257 | 4030007010 | S.CER C1608 CH 1H 100D-T | T | 75.1/70.0 |
| C258 | 4510008540 | S.ELE EEE1CA100SR | T | 68.8/75.4 |
| C260 | 4030007110 | S.CER C1608 CH 1H 680J-T | T | 54.7/87.5 |
| C262 | 4610001810 | S.TRI TZB4Z030AB10R00 (TZBX4Z030BA110) | T | 68.1/82.6 |
| C263 | 4030007080 | S.CER C1608 CH 1H 390J-T | T | 73.2/86.3 |
| C264 | 4030009530 | S.CER C1608 CH 1H 030B-T | T | 73.2/88.9 |
| C265 | 4030011770 | S.CER C1608 CH 1H 060B-T | T | 73.6/80.9 |
| C266 | 4030006880 | S.CER C1608 JB 1H 472K-T | T | 71.0/80.9 |
| C267 | 4030007010 | S.CER C1608 CH 1H 100D-T | T | 75.1/82.5 |
| C268 | 4510008540 | S.ELE EEE1CA100SR | T | 68.8/87.9 |
| C272 | 4610001860 | S.TRI TZB4Z060AB10R00 (TZBX4Z060BA110) | T | 68.1/95.1 |
| C273 | 4030007050 | S.CER C1608 CH 1H 220J-T | T | 73.2/98.2 |
| C274 | 4030009530 | S.CER C1608 CH 1H 030B-T | T | 73.2/100.8 |
| C275 | 4030009920 | S.CER C1608 CH 1H 050B-T | T | 73.6/92.8 |
| C276 | 4030006880 | S.CER C1608 JB 1H 472K-T | T | 71.0/92.8 |
| C277 | 4030007010 | S.CER C1608 CH 1H 100D-T | T | 75.1/95.0 |
| C278 | 4510008540 | S.ELE EEE1CA100SR | T | 68.8/100.4 |
| C283 | 4030017810 | S.CER C1608 CH 1H 102J-T | T | 82.1/36.3 |
| C284 | 4030006880 | S.CER C1608 JB 1H 472K-T | T | 84.5/34.3 |
| C285 | 4030017810 | S.CER C1608 CH 1H 102J-T | T | 82.1/48.8 |
| C286 | 4030006880 | S.CER C1608 JB 1H 472K-T | T | 84.5/46.9 |
| C287 | 4030017810 | S.CER C1608 CH 1H 102J-T | T | 82.1/61.3 |
| C288 | 4030006880 | S.CER C1608 JB 1H 472K-T | T | 83.9/57.5 |
| C289 | 4030017810 | S.CER C1608 CH 1H 102J-T | T | 82.1/73.8 |
| C290 | 4030006880 | S.CER C1608 JB 1H 472K-T | T | 84.3/70.5 |
| C291 | 4030017810 | S.CER C1608 CH 1H 102J-T | T | 82.1/86.3 |
| C292 | 4030006880 | S.CER C1608 JB 1H 472K-T | T | 84.5/84.4 |
| C293 | 4030017810 | S.CER C1608 CH 1H 102J-T | T | 82.2/98.8 |
| C294 | 4030006880 | S.CER C1608 JB 1H 472K-T | T | 83.2/94.0 |
| C297 | 4030009920 | S.CER C1608 CH 1H 050B-T | T | 52.7/59.4 |
| C299 | 4030007050 | S.CER C1608 CH 1H 220J-T | T | 52.7/84.4 |
| C301 | 4030006880 | S.CER C1608 JB 1H 472K-T | T | 89.3/30.6 |
| C302 | 4030006880 | S.CER C1608 JB 1H 472K-T | T | 94.9/28.0 |
| C303 | 4030006880 | S.CER C1608 JB 1H 472K-T | B | 92.6/39.8 |
| C304 | 4030006880 | S.CER C1608 JB 1H 472K-T | B | 92.6/45.2 |
| C305 | 4030006880 | S.CER C1608 JB 1H 472K-T | B | 89.1/48.8 |
| C306 | 4030006880 | S.CER C1608 JB 1H 472K-T | B | 89.1/50.6 |
| C309 | 4030017810 | S.CER C1608 CH 1H 102J-T | T | 94.9/42.7 |
| C310 | 4030011600 | S.CER C1608 JB 1E 104K-T | T | 92.9/42.2 |
| C311 | 4510008520 | S.ELE EEE1CA470SP | T | 93.4/47.4 |
| C312 | 4030006880 | S.CER C1608 JB 1H 472K-T | B | 89.0/27.4 |
| C313 | 4030006880 | S.CER C1608 JB 1H 472K-T | B | 93.8/23.1 |
| C331 | 4030007110 | S.CER C1608 CH 1H 680J-T | T | 89.3/32.2 |
| C332 | 4030007160 | S.CER C1608 CH 1H 181J-T | T | 92.1/33.5 |
| C333 | 4030007110 | S.CER C1608 CH 1H 680J-T | T | 89.3/33.5 |
| C334 | 4030007050 | S.CER C1608 CH 1H 220J-T | T | 94.9/36.0 |
| C335 | 4030006980 | S.CER C1608 CH 1H 070D-T | T | 94.9/37.4 |
| C336 | 4030007030 | S.CER C1608 CH 1H 150J-T | T | 92.1/38.8 |
| C337 | 4030007050 | S.CER C1608 CH 1H 220J-T | T | 94.9/38.8 |
| C341 | 4030006880 | S.CER C1608 JB 1H 472K-T | T | 94.9/40.1 |
| C342 | 4030006880 | S.CER C1608 JB 1H 472K-T | T | 86.5/33.5 |
| C344 | 4030011600 | S.CER C1608 JB 1E 104K-T | T | 94.9/41.4 |
| C351 | 4030017810 | S.CER C1608 CH 1H 102J-T | T | 94.9/61.6 |
| C352 | 4030011600 | S.CER C1608 JB 1E 104K-T | T | 94.9/62.9 |
| C353 | 4510008520 | S.ELE EEE1CA470SP | T | 93.4/67.1 |
| C354 | 4030006880 | S.CER C1608 JB 1H 472K-T | T | 89.3/51.7 |
| C355 | 4030006880 | S.CER C1608 JB 1H 472K-T | T | 94.9/55.1 |
| C356 | 4030006880 | S.CER C1608 JB 1H 472K-T | T | 89.3/58.4 |
| C357 | 4030006880 | S.CER C1608 JB 1H 472K-T | T | 94.9/57.7 |
| C358 | 4030006880 | S.CER C1608 JB 1H 472K-T | B | 89.2/60.3 |
| C359 | 4030006880 | S.CER C1608 JB 1H 472K-T | B | 92.6/62.1 |
| C360 | 4030006880 | S.CER C1608 JB 1H 472K-T | B | 89.9/66.9 |
| C361 | 4030006880 | S.CER C1608 JB 1H 472K-T | T | 89.4/83.5 |
| C363 | 4030006880 | S.CER C1608 JB 1H 472K-T | T | 86.1/60.9 |
| C364 | 4030017810 | S.CER C1608 CH 1H 102J-T | T | 86.7/52.3 |
| C365 | 4030006880 | S.CER C1608 JB 1H 472K-T | T | 90.3/59.9 |
| C421 | 4030006880 | S.CER C1608 JB 1H 472K-T | T | 94.1/88.5 |
| C422 | 4030006880 | S.CER C1608 JB 1H 472K-T | T | 87.3/88.5 |
| C423 | 4030006880 | S.CER C1608 JB 1H 472K-T | T | 94.1/93.3 |
| C424 | 4030006880 | S.CER C1608 JB 1H 472K-T | T | 87.9/93.3 |
| C425 | 4030006880 | S.CER C1608 JB 1H 472K-T | T | 92.8/93.3 |
| C426 | 4030006880 | S.CER C1608 JB 1H 472K-T | B | 94.6/87.3 |
| C427 | 4030006880 | S.CER C1608 JB 1H 472K-T | T | 92.1/86.6 |
| C428 | 4030006880 | S.CER C1608 JB 1H 472K-T | T | 89.3/86.6 |
| C441 | 4030007040 | S.CER C1608 CH 1H 180J-T | T | 94.9/71.3 |
| C442 | 4030007040 | S.CER C1608 CH 1H 180J-T | T | 94.9/72.6 |
| C443 | 4030007020 | S.CER C1608 CH 1H 120J-T | T | 92.1/74.3 |
| C444 | 4030007080 | S.CER C1608 CH 1H 390J-T | T | 94.9/73.9 |
| C445 | 4030011770 | S.CER C1608 CH 1H 060B-T | T | 94.9/75.2 |
| C446 | 4030007060 | S.CER C1608 CH 1H 270J-T | T | 94.9/79.1 |

Eqv.= This component is equivalent to the REF No. component listed above, and may be substituted on parts orders and repairs.

M.=Mounted side (T: Mounted on the Top side, B: Mounted on the Bottom side)
S.=Surface mount

## [RXPLL-A UNIT]

| REF NO. | PARTS NO. | DESCRIPTION | M. | H/V LOCATION |
|---|---|---|---|---|
| C447 | 4030007110 | S.CER C1608 CH 1H 680J-T | T | 92.8/79.0 |
| C448 | 4030006880 | S.CER C1608 JB 1H 472K-T | T | 94.9/76.5 |
| C449 | 4030006880 | S.CER C1608 JB 1H 472K-T | T | 88.2/69.1 |
| C451 | 4030007110 | S.CER C1608 CH 1H 680J-T | T | 92.0/82.2 |
| C452 | 4030007160 | S.CER C1608 CH 1H 181J-T | T | 92.0/80.9 |
| C453 | 4030011600 | S.CER C1608 JB 1E 104K-T | T | 94.9/77.8 |
| C501 | 4030006880 | S.CER C1608 JB 1H 472K-T | T | 38.9/131.2 |
| C502 | 4030011600 | S.CER C1608 JB 1E 104K-T | T | 38.9/129.9 |
| C503 | 4510008540 | S.ELE EEE1CA100SR | T | 36.6/126.7 |
| C504 | 4030011600 | S.CER C1608 JB 1E 104K-T | T | 21.4/153.1 |
| C505 | 4550007470 | S.TAN F931A107MNMBMA | B | 19.2/140.3 |
| C506 | 4030011600 | S.CER C1608 JB 1E 104K-T | T | 21.4/141.0 |
| C507 | 4030011600 | S.CER C1608 JB 1E 104K-T | T | 21.4/137.1 |
| C509 | 4030011600 | S.CER C1608 JB 1E 104K-T | T | 25.8/132.6 |
| C510 | 4030011600 | S.CER C1608 JB 1E 104K-T | T | 28.4/132.6 |
| C511 | 4030011600 | S.CER C1608 JB 1E 104K-T | T | 32.2/132.6 |
| C512 | 4030011600 | S.CER C1608 JB 1E 104K-T | T | 34.8/132.6 |
| C513 | 4030011600 | S.CER C1608 JB 1E 104K-T | T | 37.4/132.6 |
| C514 | 4030011600 | S.CER C1608 JB 1E 104K-T | T | 41.2/136.1 |
| C515 | 4030011600 | S.CER C1608 JB 1E 104K-T | T | 41.3/139.7 |
| C516 | 4030011600 | S.CER C1608 JB 1E 104K-T | T | 41.3/142.3 |
| C517 | 4030011600 | S.CER C1608 JB 1E 104K-T | T | 37.6/151.8 |
| C518 | 4030011600 | S.CER C1608 JB 1E 104K-T | T | 34.8/151.8 |
| C519 | 4030011600 | S.CER C1608 JB 1E 104K-T | T | 31.2/151.8 |
| C520 | 4030011600 | S.CER C1608 JB 1E 104K-T | T | 23.3/151.9 |
| C521 | 4030011600 | S.CER C1608 JB 1E 104K-T | T | 41.6/134.0 |
| C522 | 4550007220 | S.TAN F931A476MCMBMA | B | 40.7/145.0 |
| C525 | 4030006880 | S.CER C1608 JB 1H 472K-T | T | 35.4/154.5 |
| C526 | 4030011600 | S.CER C1608 JB 1E 104K-T | T | 36.7/154.5 |
| C531 | 4030006880 | S.CER C1608 JB 1H 472K-T | T | 14.6/137.5 |
| C532 | 4030007070 | S.CER C1608 CH 1H 330J-T | T | 17.2/137.5 |
| C533 | 4030007110 | S.CER C1608 CH 1H 680J-T | T | 17.3/133.4 |
| C534 | 4030007110 | S.CER C1608 CH 1H 680J-T | T | 16.8/130.1 |
| C535 | 4030007070 | S.CER C1608 CH 1H 330J-T | T | 18.1/127.0 |
| C536 | 4030006880 | S.CER C1608 JB 1H 472K-T | T | 20.9/127.6 |
| C537 | 4030006880 | S.CER C1608 JB 1H 472K-T | T | 27.2/126.4 |
| C540 | 4030006880 | S.CER C1608 JB 1H 472K-T | B | 56.3/142.8 |
| C541 | 4510008540 | S.ELE EEE1CA100SR | T | 51.0/139.3 |
| C542 | 4340000260 | S.MYL ECPU1C104MA5 | B | 47.8/128.7 |
| C543 | 4030007060 | S.CER C1608 CH 1H 270J-T | T | 62.2/136.4 |
| C545 | 4030008560 | S.CER C1608 CH 1H 300J-T | T | 70.0/137.1 |
| C546 | 4610001830 | S.TRI TZB4S100AB10R00 (TZBX4N100BA110) | T | 65.8/138.7 |
| C547 | 4030007130 | S.CER C1608 CH 1H 101J-T | T | 71.3/137.1 |
| C548 | 4030007010 | S.CER C1608 CH 1H 100D-T | T | 71.3/139.9 |
| C549 | 4030007050 | S.CER C1608 CH 1H 220J-T | T | 68.9/145.1 |
| C550 | 4030006880 | S.CER C1608 JB 1H 472K-T | T | 66.3/143.0 |
| C551 | 4030009520 | S.CER C1608 CH 1H 020B-T | T | 71.3/142.8 |
| C552 | 4030017810 | S.CER C1608 CH 1H 102J-T | B | 54.6/139.5 |
| C553 | 4030006880 | S.CER C1608 JB 1H 472K-T | B | 56.3/139.5 |
| C554 | 4510008500 | S.ELE EEE1CA101WP | T | 50.9/146.6 |
| C555 | 4030006880 | S.CER C1608 JB 1H 472K-T | B | 47.8/149.6 |
| C556 | 4550007220 | S.TAN F931A476MCMBMA | B | 76.4/136.1 |
| C558 | 4550007520 | S.TAN F931A106MAABMA | B | 43.4/132.5 |
| C559 | 4550007400 | S.TAN F931A225MAABMA | B | 43.4/129.9 |
| C561 | 4550007520 | S.TAN F931A106MAABMA | T | 70.1/157.6 |
| C562 | 4030006880 | S.CER C1608 JB 1H 472K-T | T | 68.3/155.5 |
| C563 | 4030017810 | S.CER C1608 CH 1H 102J-T | B | 60.1/158.1 |
| C564 | 4030006880 | S.CER C1608 JB 1H 472K-T | B | 58.8/158.1 |
| C565 | 4510008520 | S.ELE EEE1CA470SP | T | 50.9/155.6 |
| C566 | 4030006880 | S.CER C1608 JB 1H 472K-T | T | 64.4/155.5 |
| C571 | 4030006880 | S.CER C1608 JB 1H 472K-T | B | 58.5/161.3 |
| C573 | 4030007040 | S.CER C1608 CH 1H 180J-T | B | 72.5/166.8 |
| C574 | 4030009510 | S.CER C1608 CH 1H 010B-T | T | 72.6/169.1 |
| C575 | 4030007040 | S.CER C1608 CH 1H 180J-T | T | 72.6/171.9 |
| C580 | 4030006880 | S.CER C1608 JB 1H 472K-T | T | 41.9/152.4 |
| C581 | 4030006880 | S.CER C1608 JB 1H 472K-T | T | 41.9/144.2 |
| C591 | 4030006880 | S.CER C1608 JB 1H 472K-T | T | 63.5/171.2 |
| C592 | 4030007060 | S.CER C1608 CH 1H 270J-T | T | 62.8/163.1 |
| C593 | 4510008540 | S.ELE EEE1CA100SR | T | 54.4/170.7 |
| C594 | 4030006880 | S.CER C1608 JB 1H 472K-T | T | 57.5/171.9 |
| C596 | 4030006880 | S.CER C1608 JB 1H 472K-T | B | 63.7/168.1 |
| C597 | 4030007050 | S.CER C1608 CH 1H 220J-T | T | 62.2/171.2 |
| C604 | 4030011600 | S.CER C1608 JB 1E 104K-T | B | 50.7/111.0 |
| C605 | 4510008540 | S.ELE EEE1CA100SR | T | 52.5/110.9 |
| C651 | 4030006880 | S.CER C1608 JB 1H 472K-T | T | 13.5/174.0 |
| C652 | 4030011600 | S.CER C1608 JB 1E 104K-T | T | 12.8/176.3 |
| C653 | 4510008540 | S.ELE EEE1CA100SR | T | 6.8/172.6 |
| C654 | 4030011600 | S.CER C1608 JB 1E 104K-T | B | 17.4/170.5 |
| C655 | 4030011600 | S.CER C1608 JB 1E 104K-T | T | 25.9/161.4 |
| C656 | 4030011600 | S.CER C1608 JB 1E 104K-T | T | 25.8/177.1 |
| C657 | 4030011600 | S.CER C1608 JB 1E 104K-T | T | 31.7/169.3 |
| C658 | 4030011600 | S.CER C1608 JB 1E 104K-T | T | 13.5/172.7 |
| C659 | 4030011600 | S.CER C1608 JB 1E 104K-T | T | 16.5/163.4 |
| C660 | 4030006880 | S.CER C1608 JB 1H 472K-T | T | 17.6/161.4 |
| C661 | 4030011600 | S.CER C1608 JB 1E 104K-T | T | 13.3/166.1 |
| C662 | 4550007220 | S.TAN F931A476MCMBMA | B | 30.6/171.0 |
| C680 | 4030006880 | S.CER C1608 JB 1H 472K-T | T | 34.3/177.1 |
| C681 | 4030011340 | S.CER C1608 CH 1H 471J-T | T | 40.3/177.1 |
| C682 | 4030007120 | S.CER C1608 CH 1H 820J-T | T | 39.6/175.2 |
| C683 | 4030017870 | S.CER C1608 CH 1H 681J-T | T | 40.9/175.2 |
| C684 | 4030007070 | S.CER C1608 CH 1H 330J-T | B | 39.3/174.0 |
| C685 | 4030017800 | S.CER C1608 CH 1H 561J-T | B | 42.3/172.6 |
| C686 | 4030011280 | S.CER C1608 CH 1H 271J-T | B | 39.3/170.6 |
| C687 | 4030017810 | S.CER C1608 CH 1H 102J-T | T | 41.0/169.7 |
| C688 | 4030011280 | S.CER C1608 CH 1H 271J-T | B | 37.5/169.7 |
| C689 | 4030011600 | S.CER C1608 JB 1E 104K-T | T | 37.4/166.4 |
| C690 | 4030011600 | S.CER C1608 JB 1E 104K-T | T | 37.4/161.3 |
| C691 | 4030011600 | S.CER C1608 JB 1E 104K-T | T | 46.4/164.0 |
| C692 | 4030006880 | S.CER C1608 JB 1H 472K-T | T | 40.3/162.1 |
| C693 | 4030006880 | S.CER C1608 JB 1H 472K-T | B | 58.4/169.6 |
| C694 | 4030006880 | S.CER C1608 JB 1H 472K-T | B | 58.4/164.2 |
| C703 | 4030017810 | S.CER C1608 CH 1H 102J-T | T | 24.3/116.6 |
| C704 | 4030006880 | S.CER C1608 JB 1H 472K-T | T | 23.0/116.6 |
| C705 | 4510008500 | S.ELE EEE1CA101WP | T | 29.4/118.7 |

## [RXPLL-A UNIT]

| REF NO. | PARTS NO. | DESCRIPTION | M. | H/V LOCATION |
|---|---|---|---|---|
| C707 | 4030011600 | S.CER C1608 JB 1E 104K-T | T | 32.1/113.7 |
| C708 | 4030011600 | S.CER C1608 JB 1E 104K-T | T | 32.1/108.1 |
| C709 | 4030007070 | S.CER C1608 CH 1H 330J-T | T | 38.8/112.9 |
| C710 | 4030006880 | S.CER C1608 JB 1H 472K-T | T | 36.2/112.9 |
| C711 | 4030009540 | S.CER C1608 CH 1H 1R5B-T | B | 39.3/113.6 |
| C712 | 4030007070 | S.CER C1608 CH 1H 330J-T | T | 36.2/114.2 |
| C713 | 4030006880 | S.CER C1608 JB 1H 472K-T | T | 42.0/118.8 |
| C801 | 4030006880 | S.CER C1608 JB 1H 472K-T | T | 58.5/157.6 |
| C802 | 4030007030 | S.CER C1608 CH 1H 150J-T | T | 83.2/149.5 |
| C803 | 4030006900 | S.CER C1608 JB 1H 103K-T | T | 80.9/147.3 |
| C811 | 4030011600 | S.CER C1608 JB 1E 104K-T | T | 44.5/165.9 |
| C812 | 4030011600 | S.CER C1608 JB 1E 104K-T | T | 79.6/177.6 |
| C813 | 4030017800 | S.CER C1608 CH 1H 561J-T | B | 78.9/175.6 |
| C831 | 4030009910 | S.CER C1608 CH 1H 040B-T | T | 91.6/167.3 |
| C832 | 4030009510 | S.CER C1608 CH 1H 010B-T | T | 91.6/157.0 |
| C834 | 4030007030 | S.CER C1608 CH 1H 150J-T | T | 91.6/154.4 |
| C835 | 4030006900 | S.CER C1608 JB 1H 103K-T | T | 94.4/154.4 |
| C836 | 4510008540 | S.ELE EEE1CA100SR | T | 77.2/169.6 |
| C837 | 4030006880 | S.CER C1608 JB 1H 472K-T | T | 74.5/165.8 |
| C838 | 4030007020 | S.CER C1608 CH 1H 120J-T | T | 95.0/160.0 |
| C1000 | 4030007050 | S.CER C1608 CH 1H 220J-T | B | 177.2/13.9 |
| C1001 | 4030007170 | S.CER C1608 CH 1H 221J-T | T | 177.8/69.5 |
| C1002 | 4030006880 | S.CER C1608 JB 1H 472K-T | B | 153.1/16.2 |
| C1003 | 4030012600 | S.CER C2012 JB 1A 105M-T | T | 157.5/8.3 |
| C1004 | 4030011600 | S.CER C1608 JB 1E 104K-T | B | 169.6/8.7 |
| C1005 | 4030011600 | S.CER C1608 JB 1E 104K-T | T | 162.9/17.3 |
| C1006 | 4030010210 | S.CER C3216 JB 1C 105M-T | T | 173.8/18.6 |
| C1007 | 4030006880 | S.CER C1608 JB 1H 472K-T | T | 172.4/23.9 |
| C1008 | 4030006880 | S.CER C1608 JB 1H 472K-T | T | 160.0/24.0 |
| C1009 | 4030006880 | S.CER C1608 JB 1H 472K-T | T | 147.6/23.8 |
| C1010 | 4030012600 | S.CER C2012 JB 1A 105M-T | T | 154.5/28.9 |
| C1011 | 4030012600 | S.CER C2012 JB 1A 105M-T | T | 144.2/29.3 |
| C1012 | 4030010210 | S.CER C3216 JB 1C 105M-T | T | 144.9/40.2 |
| C1013 | 4030012600 | S.CER C2012 JB 1A 105M-T | T | 144.2/33.2 |
| C1014 | 4030018810 | S.CER C3216 CH 1H 333J-T | B | 151.6/48.3 |
| C1015 | 4030012600 | S.CER C2012 JB 1A 105M-T | T | 163.6/13.8 |
| C1016 | 4030012600 | S.CER C2012 JB 1A 105M-T | T | 173.6/33.2 |
| C1017 | 4030012600 | S.CER C2012 JB 1A 105M-T | T | 163.3/33.2 |
| C1020 | 4030012600 | S.CER C2012 JB 1A 105M-T | B | 170.0/38.6 |
| C1021 | 4030012600 | S.CER C2012 JB 1A 105M-T | B | 154.0/38.6 |
| C1024 | 4030010210 | S.CER C3216 JB 1C 105M-T | B | 170.5/45.5 |
| C1025 | 4030010210 | S.CER C3216 JB 1C 105M-T | B | 154.7/45.5 |
| C1026 | 4030010210 | S.CER C3216 JB 1C 105M-T | T | 171.4/52.7 |
| C1027 | 4030010210 | S.CER C3216 JB 1C 105M-T | T | 165.6/52.7 |
| C1028 | 4030006880 | S.CER C1608 JB 1H 472K-T | B | 156.4/65.4 |
| C1029 | 4030006880 | S.CER C1608 JB 1H 472K-T | T | 168.5/65.4 |
| C1030 | 4030010210 | S.CER C3216 JB 1C 105M-T | T | 164.6/18.0 |
| C1031 | 4030012600 | S.CER C2012 JB 1A 105M-T | B | 169.2/10.8 |
| C1032 | 4030011600 | S.CER C1608 JB 1E 104K-T | B | 183.5/65.0 |
| C1033 | 4550007500 | S.TAN F931D106MBABMA | B | 146.5/47.7 |
| Eqv. | 4550006470 | S.TAN TEESVB2 1D 106M8R | | |
| C1034 | 4550007500 | S.TAN F931D106MBABMA | B | 174.0/52.1 |
| Eqv. | 4550006470 | S.TAN TEESVB2 1D 106M8R | | |
| C1035 | 4550007500 | S.TAN F931D106MBABMA | B | 164.6/15.8 |
| Eqv. | 4550006470 | S.TAN TEESVB2 1D 106M8R | | |
| C1036 | 4030007120 | S.CER C1608 CH 1H 820J-T | T | 160.2/12.8 |
| C1037 | 4030007090 | S.CER C1608 CH 1H 470J-T | B | 149.4/49.3 |
| C1038 | 4030017810 | S.CER C1608 CH 1H 102J-T | T | 146.6/26.3 |
| C1039 | 4030017810 | S.CER C1608 CH 1H 102J-T | T | 146.6/41.0 |
| C1040 | 4030017810 | S.CER C1608 CH 1H 102J-T | T | 145.3/36.4 |
| C1041 | 4030006990 | S.CER C1608 CH 1H 080D-T | B | 153.5/31.0 |
| C1046 | 4030007010 | S.CER C1608 CH 1H 100D-T | B | 168.5/53.8 |
| C1048 | 4030006880 | S.CER C1608 JB 1H 472K-T | B | 170.7/41.7 |
| C1049 | 4030006880 | S.CER C1608 JB 1H 472K-T | B | 154.7/41.7 |
| C1050 | 4030017810 | S.CER C1608 CH 1H 102J-T | B | 170.5/49.5 |
| C1051 | 4030017810 | S.CER C1608 CH 1H 102J-T | B | 154.7/49.4 |
| C1052 | 4030007060 | S.CER C1608 CH 1H 270J-T | B | 164.1/29.6 |
| C1053 | 4030007110 | S.CER C1608 CH 1H 680J-T | T | 175.3/77.3 |
| C1054 | 4030007010 | S.CER C1608 CH 1H 100D-T | B | 175.8/72.4 |
| C1055 | 4030007140 | S.CER C1608 CH 1H 121J-T | B | 175.8/74.2 |
| C1056 | 4030007050 | S.CER C1608 CH 1H 220J-T | T | 175.3/76.0 |
| C1057 | 4030007130 | S.CER C1608 CH 1H 101J-T | T | 172.1/77.2 |
| C1058 | 4030009920 | S.CER C1608 CH 1H 050B-T | B | 173.3/12.7 |
| C1060 | 4030017810 | S.CER C1608 CH 1H 102J-T | T | 178.6/94.4 |
| C1061 | 4030007090 | S.CER C1608 CH 1H 470J-T | B | 147.7/91.9 |
| C1062 | 4030007170 | S.CER C1608 CH 1H 221J-T | B | 149.5/91.9 |
| C1064 | 4030007090 | S.CER C1608 CH 1H 470J-T | T | 148.8/80.2 |
| C1066 | 4030007010 | S.CER C1608 CH 1H 100D-T | T | 138.7/82.0 |
| C1067 | 4030007010 | S.CER C1608 CH 1H 100D-T | T | 173.4/77.2 |
| C1070 | 4030006980 | S.CER C1608 CH 1H 070D-T | T | 137.2/82.0 |
| C1071 | 4030007100 | S.CER C1608 CH 1H 560J-T | B | 162.2/75.4 |
| C1072 | 4030007170 | S.CER C1608 CH 1H 221J-T | B | 162.0/78.7 |
| C1073 | 4030007080 | S.CER C1608 CH 1H 390J-T | B | 164.1/76.5 |
| C1074 | 4030007060 | S.CER C1608 CH 1H 270J-T | T | 148.8/78.7 |
| C1081 | 4030006900 | S.CER C1608 JB 1H 103K-T | B | 156.1/86.0 |
| C1082 | 4030006900 | S.CER C1608 JB 1H 103K-T | B | 151.3/91.9 |
| C1083 | 4030006900 | S.CER C1608 JB 1H 103K-T | B | 151.2/81.7 |
| C1084 | 4030006880 | S.CER C1608 JB 1H 472K-T | B | 149.4/81.7 |
| C1085 | 4030006880 | S.CER C1608 JB 1H 472K-T | B | 153.0/81.7 |
| C1091 | 4030006880 | S.CER C1608 JB 1H 472K-T | T | 149.4/149.4 |
| C1092 | 4030006880 | S.CER C1608 JB 1H 472K-T | T | 147.0/138.5 |
| C1093 | 4030006880 | S.CER C1608 JB 1H 472K-T | T | 161.3/135.9 |
| C1101 | 4030006900 | S.CER C1608 JB 1H 103K-T | T | 177.0/91.0 |
| C1102 | 4030006900 | S.CER C1608 JB 1H 103K-T | T | 175.4/115.5 |
| C1103 | 4030011600 | S.CER C1608 JB 1E 104K-T | T | 179.6/116.4 |
| C1104 | 4030011600 | S.CER C1608 JB 1E 104K-T | T | 175.4/87.7 |
| C1106 | 4030011600 | S.CER C1608 JB 1E 104K-T | T | 179.3/128.8 |
| C1107 | 4030011600 | S.CER C1608 JB 1E 104K-T | B | 172.3/124.3 |
| C1109 | 4030007090 | S.CER C1608 CH 1H 470J-T | T | 175.7/137.9 |
| C1110 | 4030006900 | S.CER C1608 JB 1H 103K-T | T | 175.7/136.6 |
| C1111 | 4030011600 | S.CER C1608 JB 1E 104K-T | T | 176.7/132.0 |
| C1112 | 4030006900 | S.CER C1608 JB 1H 103K-T | T | 179.3/132.0 |
| C1113 | 4030007090 | S.CER C1608 CH 1H 470J-T | T | 178.6/140.9 |
| C1114 | 4030006900 | S.CER C1608 JB 1H 103K-T | B | 178.5/138.0 |
| C1115 | 4030011600 | S.CER C1608 JB 1E 104K-T | T | 175.7/140.1 |

Eqv.= This component is equivalent to the REF No. component listed above, and may be substituted on parts orders and repairs.

M.=Mounted side (T: Mounted on the Top side, B: Mounted on the Bottom side)
S.=Surface mount

## [RXPLL-A UNIT]

| REF NO. | PARTS NO. | DESCRIPTION | M. | H/V LOCATION |
|---|---|---|---|---|
| C1116 | 4030006900 | S.CER C1608 JB 1H 103K-T | T | 165.7/138.7 |
| C1117 | 4030007010 | S.CER C1608 CH 1H 100D-T | T | 169.7/142.2 |
| C1118 | 4030011600 | S.CER C1608 JB 1E 104K-T | T | 171.0/142.2 |
| C1119 | 4030006880 | S.CER C1608 JB 1H 472K-T | T | 172.0/146.6 |
| C1120 | 4030006880 | S.CER C1608 JB 1H 472K-T | T | 172.0/148.4 |
| C1121 | 4030011600 | S.CER C1608 JB 1E 104K-T | T | 180.6/147.7 |
| C1122 | 4030009530 | S.CER C1608 CH 1H 030B-T | T | 178.2/120.3 |
| C1123 | 4030006900 | S.CER C1608 JB 1H 103K-T | T | 182.1/100.9 |
| C1124 | 4030006900 | S.CER C1608 JB 1H 103K-T | T | 175.4/105.9 |
| C1125 | 4030006900 | S.CER C1608 JB 1H 103K-T | T | 175.5/85.1 |
| C1126 | 4030011600 | S.CER C1608 JB 1E 104K-T | T | 173.5/131.1 |
| C1151 | 4030007110 | S.CER C1608 CH 1H 680J-T | B | 123.2/64.1 |
| C1152 | 4030007110 | S.CER C1608 CH 1H 680J-T | B | 123.2/57.1 |
| C1153 | 4030017810 | S.CER C1608 CH 1H 102J-T | T | 131.5/64.0 |
| C1201 | 4030007110 | S.CER C1608 CH 1H 680J-T | B | 120.3/21.8 |
| C1202 | 4030007110 | S.CER C1608 CH 1H 680J-T | B | 118.5/21.8 |
| C1207 | 4030006880 | S.CER C1608 JB 1H 472K-T | B | 123.1/11.9 |
| C1214 | 4030007170 | S.CER C1608 CH 1H 221J-T | T | 137.4/55.4 |
| C1215 | 4030011600 | S.CER C1608 JB 1E 104K-T | T | 137.7/51.9 |
| C1226 | 4030009500 | S.CER C1608 CH 1H 0R5B-T | B | 125.0/35.7 |
| C1227 | 4030009500 | S.CER C1608 CH 1H 0R5B-T | B | 115.5/35.7 |
| C1228 | 4030009920 | S.CER C1608 CH 1H 050B-T | B | 114.0/41.9 |
| C1231 | 4030006900 | S.CER C1608 JB 1H 103K-T | T | 118.9/21.5 |
| C1232 | 4030006900 | S.CER C1608 JB 1H 103K-T | T | 109.0/21.5 |
| C1234 | 4030006900 | S.CER C1608 JB 1H 103K-T | B | 123.6/38.3 |
| C1235 | 4030006880 | S.CER C1608 JB 1H 472K-T | B | 116.6/32.2 |
| C1236 | 4030006900 | S.CER C1608 JB 1H 103K-T | T | 119.8/40.1 |
| C1238 | 4030006900 | S.CER C1608 JB 1H 103K-T | B | 114.1/38.3 |
| C1239 | 4030006880 | S.CER C1608 JB 1H 472K-T | B | 106.8/32.3 |
| C1240 | 4030006900 | S.CER C1608 JB 1H 103K-T | T | 111.7/40.5 |
| C1241 | 4030006900 | S.CER C1608 JB 1H 103K-T | T | 113.6/38.6 |
| C1243 | 4030006880 | S.CER C1608 JB 1H 472K-T | B | 129.6/46.7 |
| C1244 | 4030007080 | S.CER C1608 CH 1H 390J-T | T | 149.7/67.0 |
| C1245 | 4030007130 | S.CER C1608 CH 1H 101J-T | T | 151.0/64.4 |
| C1246 | 4030007120 | S.CER C1608 CH 1H 820J-T | T | 151.0/67.1 |
| C1247 | 4030007090 | S.CER C1608 CH 1H 470J-T | T | 153.5/63.5 |
| C1248 | 4030007130 | S.CER C1608 CH 1H 101J-T | T | 153.5/66.8 |
| C1249 | 4030007020 | S.CER C1608 CH 1H 120J-T | T | 153.2/70.3 |
| C1250 | 4030007100 | S.CER C1608 CH 1H 560J-T | B | 152.5/74.3 |
| C1251 | 4030006900 | S.CER C1608 JB 1H 103K-T | T | 160.2/92.9 |
| C1252 | 4030006900 | S.CER C1608 JB 1H 103K-T | T | 152.7/92.9 |
| C1253 | 4030006900 | S.CER C1608 JB 1H 103K-T | B | 152.5/111.3 |
| C1255 | 4030017810 | S.CER C1608 CH 1H 102J-T | B | 155.8/99.3 |
| C1256 | 4030007010 | S.CER C1608 CH 1H 100D-T | T | 156.3/98.8 |
| C1257 | 4030011600 | S.CER C1608 JB 1E 104K-T | B | 155.8/103.0 |
| C1258 | 4030007080 | S.CER C1608 CH 1H 390J-T | B | 152.1/97.5 |
| C1264 | 4030007110 | S.CER C1608 CH 1H 680J-T | T | 122.0/51.1 |
| C1265 | 4610001830 | S.TRI TZB4S100AB10R00 (TZBX4N100BA110) | T | 163.8/70.8 |
| C1266 | 4030007020 | S.CER C1608 CH 1H 120J-T | T | 160.2/74.6 |
| C1267 | 4030006880 | S.CER C1608 JB 1H 472K-T | B | 157.0/126.5 |
| C1268 | 4030006980 | S.CER C1608 CH 1H 070D-T | T | 149.7/64.4 |
| C1302 | 4030007060 | S.CER C1608 CH 1H 270J-T | T | 159.3/111.0 |
| C1303 | 4030006980 | S.CER C1608 CH 1H 070D-T | T | 159.3/112.9 |
| C1304 | 4030007070 | S.CER C1608 CH 1H 330J-T | T | 159.3/114.2 |
| C1305 | 4030007010 | S.CER C1608 CH 1H 100D-T | T | 153.5/114.6 |
| C1306 | 4030009650 | S.CER C1608 CH 1H 240J-T | T | 159.3/115.5 |
| C1307 | 4030007030 | S.CER C1608 CH 1H 150J-T | T | 153.5/120.2 |
| C1308 | 4030006900 | S.CER C1608 JB 1H 103K-T | T | 155.1/127.1 |
| C1309 | 4030007080 | S.CER C1608 CH 1H 390J-T | T | 156.5/125.8 |
| C1310 | 4030007080 | S.CER C1608 CH 1H 390J-T | T | 159.1/128.4 |
| C1311 | 4030006900 | S.CER C1608 JB 1H 103K-T | B | 149.0/118.9 |
| C1312 | 4030007060 | S.CER C1608 CH 1H 270J-T | T | 155.5/111.7 |
| C1313 | 4030007060 | S.CER C1608 CH 1H 270J-T | T | 159.1/127.1 |
| C1355 | 4030006880 | S.CER C1608 JB 1H 472K-T | T | 144.7/70.0 |
| C1357 | 4030007000 | S.CER C1608 CH 1H 090D-T | B | 144.6/67.2 |
| C1358 | 4030011600 | S.CER C1608 JB 1E 104K-T | B | 139.2/70.5 |
| C1360 | 4030011600 | S.CER C1608 JB 1E 104K-T | B | 146.4/70.5 |
| C1361 | 4030007020 | S.CER C1608 CH 1H 120J-T | B | 137.8/69.5 |
| C1362 | 4030011600 | S.CER C1608 JB 1E 104K-T | T | 137.5/65.6 |
| C1403 | 4030017810 | S.CER C1608 CH 1H 102J-T | T | 114.8/70.4 |
| C1404 | 4030017810 | S.CER C1608 CH 1H 102J-T | T | 116.3/104.8 |
| C1405 | 4030006900 | S.CER C1608 JB 1H 103K-T | B | 115.9/63.9 |
| C1406 | 4030017810 | S.CER C1608 CH 1H 102J-T | T | 114.3/66.3 |
| C1407 | 4030017810 | S.CER C1608 CH 1H 102J-T | T | 120.0/70.3 |
| C1408 | 4030006900 | S.CER C1608 JB 1H 103K-T | T | 116.4/73.0 |
| C1409 | 4030006900 | S.CER C1608 JB 1H 103K-T | T | 114.4/68.2 |
| C1410 | 4030007030 | S.CER C1608 CH 1H 150J-T | T | 116.3/83.4 |
| C1411 | 4030006990 | S.CER C1608 CH 1H 080D-T | T | 112.2/87.9 |
| C1412 | 4030007030 | S.CER C1608 CH 1H 150J-T | T | 116.3/93.8 |
| C1413 | 4030007020 | S.CER C1608 CH 1H 120J-T | T | 107.0/83.4 |
| C1414 | 4030006990 | S.CER C1608 CH 1H 080D-T | T | 103.6/86.7 |
| C1415 | 4030007020 | S.CER C1608 CH 1H 120J-T | T | 107.0/93.8 |
| C1416 | 4030006900 | S.CER C1608 JB 1H 103K-T | T | 113.2/103.5 |
| C1417 | 4030006900 | S.CER C1608 JB 1H 103K-T | T | 110.6/107.7 |
| C1418 | 4030017810 | S.CER C1608 CH 1H 102J-T | T | 110.4/105.8 |
| C1419 | 4030017810 | S.CER C1608 CH 1H 102J-T | T | 111.0/109.0 |
| C1420 | 4030007120 | S.CER C1608 CH 1H 820J-T | B | 113.2/114.3 |
| C1421 | 4030007150 | S.CER C1608 CH 1H 151J-T | B | 115.0/114.3 |
| C1423 | 4030010750 | S.CER C1608 CH 1H 201J-T | B | 120.3/111.1 |
| C1424 | 4030007010 | S.CER C1608 CH 1H 100D-T | T | 132.8/103.4 |
| C1425 | 4030011600 | S.CER C1608 JB 1E 104K-T | T | 136.5/106.3 |
| C1426 | 4030011600 | S.CER C1608 JB 1E 104K-T | T | 137.8/106.3 |
| C1427 | 4030006900 | S.CER C1608 JB 1H 103K-T | T | 133.9/106.3 |
| C1428 | 4030006980 | S.CER C1608 CH 1H 070D-T | T | 119.6/109.0 |
| C1429 | 4030006900 | S.CER C1608 JB 1H 103K-T | T | 120.6/113.6 |
| C1430 | 4030007040 | S.CER C1608 CH 1H 180J-T | B | 131.9/115.4 |
| C1431 | 4030017810 | S.CER C1608 CH 1H 102J-T | T | 127.1/116.2 |
| C1432 | 4030009980 | S.CER C1608 JB 1H 152K-T | T | 129.1/114.2 |
| C1433 | 4030011600 | S.CER C1608 JB 1E 104K-T | T | 130.4/114.2 |
| C1434 | 4030009920 | S.CER C1608 CH 1H 050B-T | B | 124.7/134.4 |
| C1435 | 4030009920 | S.CER C1608 CH 1H 050B-T | B | 124.7/131.6 |
| C1436 | 4030011600 | S.CER C1608 JB 1E 104K-T | B | 137.3/122.2 |
| C1437 | 4030009920 | S.CER C1608 CH 1H 050B-T | T | 104.0/83.4 |
| C1438 | 4030009920 | S.CER C1608 CH 1H 050B-T | T | 102.3/86.7 |

## [RXPLL-A UNIT]

| REF NO. | PARTS NO. | DESCRIPTION | M. | H/V LOCATION |
|---|---|---|---|---|
| C1439 | 4030009920 | S.CER C1608 CH 1H 050B-T | T | 110.0/93.8 |
| C1441 | 4030006880 | S.CER C1608 JB 1H 472K-T | T | 120.6/116.2 |
| C1451 | 4030007020 | S.CER C1608 CH 1H 120J-T | T | 125.5/80.2 |
| C1453 | 4030007030 | S.CER C1608 CH 1H 150J-T | T | 122.1/85.1 |
| C1454 | 4030007030 | S.CER C1608 CH 1H 150J-T | T | 120.8/85.1 |
| C1456 | 4030007020 | S.CER C1608 CH 1H 120J-T | T | 125.6/90.9 |
| C1457 | 4030006900 | S.CER C1608 JB 1H 103K-T | T | 118.4/72.9 |
| C1458 | 4030006900 | S.CER C1608 JB 1H 103K-T | T | 116.6/103.5 |
| C1501 | 4030018530 | S.CER C3216 CH 1H 103J-T | T | 131.3/124.6 |
| C1502 | 4550007660 | S.TAN F931E105MAABMA | T | 132.1/139.3 |
| Eqv. | 4550003220 | S.TAN TEESVA 1E 105M8R | | |
| C1503 | 4030006900 | S.CER C1608 JB 1H 103K-T | T | 137.0/142.1 |
| C1504 | 4030012610 | S.CER C2012 JB 1C 474K-T | T | 136.7/140.5 |
| C1505 | 4030007010 | S.CER C1608 CH 1H 100D-T | T | 130.0/143.5 |
| C1506 | 4030010760 | S.CER C1608 CH 1H 331J-T | T | 131.3/146.3 |
| C1507 | 4510008540 | S.ELE EEE1CA100SR | T | 142.6/140.8 |
| C1508 | 4030011600 | S.CER C1608 JB 1E 104K-T | B | 128.8/148.8 |
| C1509 | 4030018800 | S.CER C3216 CH 1H 223J-T | T | 135.8/145.1 |
| C1510 | 4030007110 | S.CER C1608 CH 1H 680J-T | T | 136.5/158.9 |
| C1511 | 4510008540 | S.ELE EEE1CA100SR | T | 132.7/150.6 |
| C1512 | 4030011600 | S.CER C1608 JB 1E 104K-T | T | 129.6/149.0 |
| C1513 | 4030011600 | S.CER C1608 JB 1E 104K-T | T | 129.6/158.1 |
| C1514 | 4510008540 | S.ELE EEE1CA100SR | T | 132.7/156.5 |
| C1515 | 4030007160 | S.CER C1608 CH 1H 181J-T | T | 132.2/160.8 |
| C1516 | 4030009350 | S.CER C1608 CH 1H 3R5B-T | T | 130.9/160.8 |
| C1517 | 4030007110 | S.CER C1608 CH 1H 680J-T | T | 115.3/155.0 |
| C1518 | 4030018530 | S.CER C3216 CH 1H 103J-T | T | 131.3/132.8 |
| C1519 | 4550007660 | S.TAN F931E105MAABMA | T | 122.9/140.9 |
| Eqv. | 4550003220 | S.TAN TEESVA 1E 105M8R | | |
| C1520 | 4030006900 | S.CER C1608 JB 1H 103K-T | T | 119.8/140.8 |
| C1521 | 4030012610 | S.CER C2012 JB 1C 474K-T | T | 116.2/142.1 |
| C1522 | 4030007010 | S.CER C1608 CH 1H 100D-T | T | 123.7/143.5 |
| C1523 | 4030010760 | S.CER C1608 CH 1H 331J-T | T | 122.4/146.3 |
| C1524 | 4030018800 | S.CER C3216 CH 1H 223J-T | T | 117.9/145.2 |
| C1525 | 4510008540 | S.ELE EEE1CA100SR | T | 124.9/150.6 |
| C1526 | 4030011600 | S.CER C1608 JB 1E 104K-T | T | 128.0/149.0 |
| C1527 | 4030011600 | S.CER C1608 JB 1E 104K-T | T | 128.0/158.1 |
| C1528 | 4510008540 | S.ELE EEE1CA100SR | T | 124.9/156.5 |
| C1529 | 4030017870 | S.CER C1608 CH 1H 681J-T | T | 125.4/160.8 |
| C1530 | 4030011330 | S.CER C1608 CH 1H 391J-T | T | 126.7/160.8 |
| C1531 | 4510008500 | S.ELE EEE1CA101WP | T | 111.3/167.3 |
| C1532 | 4030011600 | S.CER C1608 JB 1E 104K-T | T | 107.1/167.3 |
| C1533 | 4030011600 | S.CER C1608 JB 1E 104K-T | T | 115.5/167.3 |
| C1534 | 4510008500 | S.ELE EEE1CA101WP | T | 119.7/167.3 |
| C1535 | 4030011600 | S.CER C1608 JB 1E 104K-T | T | 133.7/172.6 |
| C1536 | 4030017870 | S.CER C1608 CH 1H 681J-T | T | 126.2/179.5 |
| C1537 | 4510008500 | S.ELE EEE1CA101WP | T | 111.3/176.0 |
| C1538 | 4030011600 | S.CER C1608 JB 1E 104K-T | T | 107.1/176.0 |
| C1539 | 4030011600 | S.CER C1608 JB 1E 104K-T | T | 115.5/176.0 |
| C1540 | 4510008500 | S.ELE EEE1CA101WP | T | 119.7/176.0 |
| C1541 | 4030007050 | S.CER C1608 CH 1H 220J-T | T | 124.0/175.0 |
| C1651 | 4030006880 | S.CER C1608 JB 1H 472K-T | B | 105.5/144.1 |
| C1653 | 4030006880 | S.CER C1608 JB 1H 472K-T | B | 109.0/137.2 |
| C1654 | 4030017810 | S.CER C1608 CH 1H 102J-T | B | 106.9/137.2 |
| C1655 | 4030009530 | S.CER C1608 CH 1H 030B-T | T | 107.6/136.8 |
| C1656 | 4610001970 | S.TRI TZC3P200A110R00 (TZC03P200A1102) | T | 110.9/136.2 |
| C1657 | 4030010220 | S.CER C2012 CH 1H 102J-T | T | 116.4/122.8 |
| C1658 | 4030010220 | S.CER C2012 CH 1H 102J-T | T | 116.4/131.0 |
| C1659 | 4030011600 | S.CER C1608 JB 1E 104K-T | T | 107.8/120.1 |
| C1660 | 4030011600 | S.CER C1608 JB 1E 104K-T | B | 134.0/174.0 |
| C1661 | 4030011600 | S.CER C1608 JB 1E 104K-T | B | 145.2/171.4 |
| C1662 | 4030011600 | S.CER C1608 JB 1E 104K-T | T | 144.3/178.0 |
| C1663 | 4030011600 | S.CER C1608 JB 1E 104K-T | T | 135.1/170.2 |
| C1665 | 4030006900 | S.CER C1608 JB 1H 103K-T | T | 138.9/164.1 |
| C1666 | 4030006880 | S.CER C1608 JB 1H 472K-T | B | 113.3/144.1 |
| C1701 | 4030011600 | S.CER C1608 JB 1E 104K-T | T | 153.4/163.0 |
| C1702 | 4030011600 | S.CER C1608 JB 1E 104K-T | T | 144.4/163.0 |
| C1703 | 4510004601 | ELE 16 ME 1000 HC | | |
| C1704 | 4030011600 | S.CER C1608 JB 1E 104K-T | B | 180.1/160.2 |
| C1705 | 4030011600 | S.CER C1608 JB 1E 104K-T | B | 186.4/160.2 |
| C1706 | 4510008520 | S.ELE EEE1CA470SP | T | 172.7/154.8 |
| C1707 | 4030011600 | S.CER C1608 JB 1E 104K-T | T | 149.7/154.8 |
| C1708 | 4030006880 | S.CER C1608 JB 1H 472K-T | T | 175.7/166.8 |
| C1709 | 4030006880 | S.CER C1608 JB 1H 472K-T | T | 172.6/166.8 |
| C1710 | 4030006880 | S.CER C1608 JB 1H 472K-T | T | 169.6/166.8 |
| C1711 | 4030011340 | S.CER C1608 CH 1H 471J-T | T | 171.4/163.5 |
| C1712 | 4030011340 | S.CER C1608 CH 1H 471J-T | T | 167.5/163.5 |
| C1713 | 4030006880 | S.CER C1608 JB 1H 472K-T | B | 165.5/168.8 |
| C1714 | 4030006880 | S.CER C1608 JB 1H 472K-T | B | 153.8/141.9 |
| C1716 | 4030006880 | S.CER C1608 JB 1H 472K-T | B | 154.7/145.2 |
| C1717 | 4030006880 | S.CER C1608 JB 1H 472K-T | B | 152.9/145.2 |
| C1719 | 4030006880 | S.CER C1608 JB 1H 472K-T | B | 151.1/145.2 |
| C1720 | 4030006880 | S.CER C1608 JB 1H 472K-T | B | 155.6/141.9 |
| C1721 | 4030006880 | S.CER C1608 JB 1H 472K-T | B | 157.4/141.9 |
| RL1001 | 6330001750 | REL FTR-B4CA012Z | | |
| RL1002 | 6330001750 | REL FTR-B4CA012Z | | |
| RL1003 | 6330001750 | REL FTR-B4CA012Z | | |
| RL1004 | 6330001750 | REL FTR-B4CA012Z | | |
| RL1005 | 6330001750 | REL FTR-B4CA012Z | | |
| RL1006 | 6330001750 | REL FTR-B4CA012Z | | |
| RL1203 | 6330001750 | REL FTR-B4CA012Z | | |
| RL1206 | 6330001750 | REL FTR-B4CA012Z | | |
| J2 | 6510019991 | S.CON 52808-2271(2291) | T | 25.0/9.0 |
| J10 | 6510028210 | CON SJ050010 (TMP-J01X-V6) | | |
| J351 | 6510028210 | CON SJ050010 (TMP-J01X-V6) | | |
| J421 | 6510028210 | CON SJ050010 (TMP-J01X-V6) | | |
| J561 | 6510028210 | CON SJ050010 (TMP-J01X-V6) | | |
| J601 | 6510028210 | CON SJ050010 (TMP-J01X-V6) | | |
| J681 | 6510028210 | CON SJ050010 (TMP-J01X-V6) | | |
| J831 | 6510028210 | CON SJ050010 (TMP-J01X-V6) | | |

Eqv.= This component is equivalent to the REF No. component listed above, and may be substituted on parts orders and repairs.

M.=Mounted side (T: Mounted on the Top side, B: Mounted on the Bottom side)
S.=Surface mount

## [RXPLL-A UNIT]

| REF NO. | PARTS NO. | DESCRIPTION | | M. | H/V LOCATION |
|---|---|---|---|---|---|
| J1001 | 6510028210 | CON | SJ050010 (TMP-J01X-V6) | | |
| J1002 | 6510028210 | CON | SJ050010 (TMP-J01X-V6) | | |
| J1101 | 6510028210 | CON | SJ050010 (TMP-J01X-V6) | | |
| J1201 | 6510028210 | CON | SJ050010 (TMP-J01X-V6) | | |
| J1301 | 6510028210 | CON | SJ050010 (TMP-J01X-V6) | | |
| J1501 | 6510018961 | S.CON | B2B-PH-SM4-TB(LF)(SN) | T | 149.6/177.5 |
| J1701 | 6510019981 | S.CON | 52808-1671(1690) | T | 168.0/177.2 |
| W1052 | 9016201006 | WIR | 73/98/025/X98/X98 | | |
| W1401 | 9029495075 | JUM | 73/98/020/X98/X98 | | |
| W1411 | 7120000480 | S.JUM | MJP-0.4-T | T | 125.1/111.6 |
| EP20 | 6910012350 | S.BEA | MMZ1608Y 102BT | T | 85.4/126.0 |
| EP21 | 6910012350 | S.BEA | MMZ1608Y 102BT | T | 88.7/124.0 |
| EP22 | 6910012350 | S.BEA | MMZ1608Y 102BT | T | 90.0/124.0 |
| EP101 | 6910012350 | S.BEA | MMZ1608Y 102BT | B | 47.7/98.6 |
| EP102 | 6910012350 | S.BEA | MMZ1608Y 102BT | B | 47.7/96.8 |
| EP103 | 6910012350 | S.BEA | MMZ1608Y 102BT | T | 46.1/96.8 |
| EP104 | 6910012350 | S.BEA | MMZ1608Y 102BT | T | 46.1/92.9 |
| EP105 | 6910012350 | S.BEA | MMZ1608Y 102BT | T | 46.1/91.6 |
| EP106 | 6910012350 | S.BEA | MMZ1608Y 102BT | T | 46.1/89.0 |
| EP107 | 6910012350 | S.BEA | MMZ1608Y 102BT | B | 47.7/100.4 |
| EP108 | 6910012350 | S.BEA | MMZ1608Y 102BT | B | 47.7/102.2 |
| EP1701 | 6910012350 | S.BEA | MMZ1608Y 102BT | T | 170.1/163.5 |
| EP1702 | 6910012350 | S.BEA | MMZ1608Y 102BT | T | 168.8/163.5 |
| EP1801 | 6910012350 | S.BEA | MMZ1608Y 102BT | B | 153.1/132.7 |
| EP1802 | 6910012350 | S.BEA | MMZ1608Y 102BT | B | 142.5/18.8 |
| EP1804 | 6910012350 | S.BEA | MMZ1608Y 102BT | B | 112.5/138.7 |
| EP1805 | 6910012350 | S.BEA | MMZ1608Y 102BT | B | 150.2/141.9 |
| EP1806 | 6910012350 | S.BEA | MMZ1608Y 102BT | B | 128.6/64.4 |
| EP1807 | 6910012350 | S.BEA | MMZ1608Y 102BT | B | 117.5/50.3 |
| EP1808 | 6910012350 | S.BEA | MMZ1608Y 102BT | B | 137.0/166.9 |
| EP1809 | 6910012350 | S.BEA | MMZ1608Y 102BT | B | 147.4/127.5 |
| EP1810 | 6910012350 | S.BEA | MMZ1608Y 102BT | B | 131.4/64.3 |
| EP1811 | 6910012350 | S.BEA | MMZ1608Y 102BT | T | 160.7/56.3 |
| EP1812 | 6910012350 | S.BEA | MMZ1608Y 102BT | B | 153.5/137.5 |
| EP1813 | 6910012350 | S.BEA | MMZ1608Y 102BT | B | 132.7/65.8 |
| EP1814 | 6910012350 | S.BEA | MMZ1608Y 102BT | B | 147.2/22.3 |
| EP1815 | 6910012350 | S.BEA | MMZ1608Y 102BT | B | 156.0/62.6 |
| EP1816 | 6910012350 | S.BEA | MMZ1608Y 102BT | B | 160.4/20.9 |
| EP1817 | 6910012350 | S.BEA | MMZ1608Y 102BT | B | 168.6/62.2 |
| EP1818 | 6910012350 | S.BEA | MMZ1608Y 102BT | B | 151.3/133.3 |
| EP1819 | 6910012350 | S.BEA | MMZ1608Y 102BT | B | 145.6/127.9 |
| EP1820 | 6910012350 | S.BEA | MMZ1608Y 102BT | B | 148.6/19.8 |
| EP1821 | 6910012350 | S.BEA | MMZ1608Y 102BT | B | 148.6/14.1 |
| EP1825 | 6910012350 | S.BEA | MMZ1608Y 102BT | B | 126.6/7.1 |
| EP1826 | 6910012350 | S.BEA | MMZ1608Y 102BT | B | 151.6/137.8 |
| EP1830 | 6910012350 | S.BEA | MMZ1608Y 102BT | B | 141.3/135.2 |
| EP1831 | 6910012350 | S.BEA | MMZ1608Y 102BT | B | 143.4/128.5 |
| EP1832 | 6910012350 | S.BEA | MMZ1608Y 102BT | B | 149.2/137.6 |
| EP1833 | 6910012350 | S.BEA | MMZ1608Y 102BT | B | 147.3/133.5 |
| EP1834 | 6910012350 | S.BEA | MMZ1608Y 102BT | T | 115.9/108.3 |
| EP1835 | 6910012350 | S.BEA | MMZ1608Y 102BT | B | 141.6/128.5 |
| EP1836 | 6910012350 | S.BEA | MMZ1608Y 102BT | T | 111.0/110.3 |
| EP1837 | 6910012350 | S.BEA | MMZ1608Y 102BT | B | 145.9/134.2 |
| EP1838 | 6910012350 | S.BEA | MMZ1608Y 102BT | T | 116.4/106.1 |

## [RXPLL-B UNIT]

| REF NO. | PARTS NO. | DESCRIPTION | | M. | H/V LOCATION |
|---|---|---|---|---|---|
| IC1 | 1130011530 | S.IC | CD74HC4094M96 | T | 11.9/24.1 |
| IC2 | 1130009691 | S.IC | TC74HCT7007AF(F) S | T | 22.8/23.3 |
| IC51 | 1180001252 | S.IC | TA7808F(TE16L1NQ) | T | 77.0/16.7 |
| IC61 | 1180000421 | S.IC | TA78L05F(TE12RF) | B | 56.5/16.0 |
| IC101 | 1140007881 | S.IC | TC190G08EFG0046JDZ/SC1246A | T | 31.3/89.7 |
| IC102 | 1130003831 | S.IC | TC7S04F(TE85RF) | T | 33.1/74.7 |
| IC104 | 1130003831 | S.IC | TC7S04F(TE85RF) | T | 31.8/101.1 |
| IC201 | 1130009230 | S.IC | LMX2306TMX/NOPB | T | 27.9/38.8 |
| IC501 | 1140007881 | S.IC | TC190G08EFG0046JDZ/SC1246A | T | 31.3/142.5 |
| IC502 | 1130003831 | S.IC | TC7S04F(TE85RF) | T | 24.8/127.4 |
| IC503 | 1130003831 | S.IC | TC7S04F(TE85RF) | T | 31.7/154.1 |
| IC651 | 1140014960 | S.IC | TC190G02EFG-0058/SC1287A | T | 22.6/169.2 |
| IC652 | 1130003831 | S.IC | TC7S04F(TE85RF) | T | 13.8/163.8 |
| IC1051 | 1190002010 | S.IC | SD5400CY <TOMO> | T | 176.9/99.9 |
| IC1081 | 1110006180 | S.IC | UPG2009TB-E3 | B | 151.7/85.1 |
| IC1402 | 1190002110 | S.IC | NJG1519KC1-TE3-#ZZZB | T | 117.4/69.6 |
| IC1403 | 1190002110 | S.IC | NJG1519KC1-TE3-#ZZZB | T | 113.5/106.3 |
| IC1501 | 1110006121 | S.IC | DBM9A41-G-TR | T | 121.2/124.5 |
| IC1502 | 1110006121 | S.IC | DBM9A41-G-TR | T | 121.2/133.0 |
| IC1503 | 1110006100 | S.IC | NJM5534MD-TE1-#ZZZB | T | 138.4/151.7 |
| IC1504 | 1110006100 | S.IC | NJM5534MD-TE1-#ZZZB | T | 119.2/151.7 |
| IC1505 | 1110006190 | S.IC | NJM074M-TE1-#ZZZB | T | 128.8/166.9 |
| IC1506 | 1110006100 | S.IC | NJM5534MD-TE1-#ZZZB | T | 128.8/175.6 |
| IC1651 | 1130011921 | S.IC | TC74LCX00F(ELF) | T | 110.0/126.2 |
| IC1652 | 1110005420 | S.IC | BA15532F-E2 | T | 139.8/175.6 |
| IC1653 | 1110005100 | S.IC | NJM072BM-TE1-#ZZZB | B | 140.0/172.0 |
| IC1701 | 1130011530 | S.IC | CD74HC4094M96 | T | 158.0/166.7 |
| IC1702 | 1130011530 | S.IC | CD74HC4094M96 | T | 148.9/166.7 |
| IC1703 | 1160000132 | S.IC | TD62783AFG(OSEL) | T | 157.3/154.8 |
| IC1704 | 1180000790 | S.IC | AN78L10M(E1) | B | 183.3/159.9 |
| Q1 | 1590001050 | S.TRA | DTC114TUA T106 | B | 30.3/22.6 |
| Q30 | 1530002060 | S.TRA | 2SC4081 T106 R | T | 22.3/110.9 |
| Q41 | 1590000680 | S.TRA | DTC114EUA T106 | T | 12.8/34.2 |
| Q150 | 1560000331 | S.FET | 2SK210-GR(TE85RF) | T | 26.9/53.0 |
| Q151 | 1530002280 | S.TRA | 2SC4081 T106 S | B | 33.6/57.2 |
| Q152 | 1530002280 | S.TRA | 2SC4081 T106 S | B | 30.8/78.2 |
| Q201 | 1590001330 | S.TRA | DTA114EUA T106 | T | 29.6/34.1 |
| Q220 | 1560000331 | S.FET | 2SK210-GR(TE85RF) | T | 72.5/33.9 |
| Q230 | 1560000331 | S.FET | 2SK210-GR(TE85RF) | T | 72.5/46.4 |
| Q240 | 1560000331 | S.FET | 2SK210-GR(TE85RF) | T | 72.5/58.9 |
| Q250 | 1560000331 | S.FET | 2SK210-GR(TE85RF) | T | 72.5/71.4 |
| Q260 | 1560000331 | S.FET | 2SK210-GR(TE85RF) | T | 72.5/83.9 |
| Q270 | 1560000331 | S.FET | 2SK210-GR(TE85RF) | T | 72.5/95.8 |
| Q280 | 1590000680 | S.TRA | DTC114EUA T106 | T | 82.3/34.4 |
| Q281 | 1590000680 | S.TRA | DTC114EUA T106 | T | 82.3/46.9 |
| Q282 | 1590000680 | S.TRA | DTC114EUA T106 | T | 82.3/59.4 |
| Q283 | 1590000680 | S.TRA | DTC114EUA T106 | T | 82.3/71.9 |
| Q284 | 1590000680 | S.TRA | DTC114EUA T106 | T | 82.3/84.4 |
| Q285 | 1590000680 | S.TRA | DTC114EUA T106 | T | 82.3/96.4 |
| Q301 | 1530003432 | S.TRA | 2SC5226A-4-TL-E | T | 92.1/30.1 |
| Q302 | 1530003432 | S.TRA | 2SC5226A-4-TL-E | B | 89.1/42.5 |
| Q303 | 1530003432 | S.TRA | 2SC5226A-4-TL-E | B | 91.4/25.2 |
| Q341 | 1590000680 | S.TRA | DTC114EUA T106 | T | 86.4/36.7 |
| Q351 | 1580000751 | S.FET | 3SK294(TE85LF) | T | 92.1/56.9 |
| Q352 | 1530003432 | S.TRA | 2SC5226A-4-TL-E | B | 89.2/64.5 |
| Q363 | 1590000680 | S.TRA | DTC114EUA T106 | T | 86.8/54.3 |
| Q364 | 1590001330 | S.TRA | DTA114EUA T106 | T | 86.8/57.4 |
| Q441 | 1590000680 | S.TRA | DTC114EUA T106 | T | 86.5/73.7 |
| Q502 | 1590000680 | S.TRA | DTC114EUA T106 | T | 41.9/128.8 |
| Q540 | 1530002060 | S.TRA | 2SC4081 T106 R | B | 58.7/141.2 |
| Q541 | 1560000331 | S.FET | 2SK210-GR(TE85RF) | T | 68.9/142.8 |
| Q561 | 1530003432 | S.TRA | 2SC5226A-4-TL-E | T | 70.6/153.8 |
| Q580 | 1530003432 | S.TRA | 2SC5226A-4-TL-E | T | 41.7/147.4 |
| Q591 | 1530003151 | S.TRA | 2SC4673D-TD-E | T | 61.7/166.5 |
| Q592 | 1520000561 | S.TRA | 2SB1123 T-TD-E | B | 52.0/165.3 |
| Q593 | 1590000680 | S.TRA | DTC114EUA T106 | B | 54.8/171.2 |
| Q601 | 1530002601 | S.TRA | 2SC4215-O(TE85RF) | T | 49.5/118.2 |
| Q680 | 1530002060 | S.TRA | 2SC4081 T106 R | T | 37.5/163.2 |
| Q702 | 1530002601 | S.TRA | 2SC4215-O(TE85RF) | T | 31.4/110.9 |
| Q1001 | 1530003852 | S.TRA | 2SC5551A-F-TD-E | B | 174.0/9.0 |
| Q1004 | 1590001960 | S.TRA | XP4311(TX) | T | 150.0/18.8 |
| Q1005 | 1590001960 | S.TRA | XP4311(TX) | T | 145.9/18.8 |
| Q1006 | 1530003852 | S.TRA | 2SC5551A-F-TD-E | B | 150.0/37.6 |
| Q1007 | 1530003852 | S.TRA | 2SC5551A-F-TD-E | B | 176.5/42.6 |
| Q1008 | 1530003852 | S.TRA | 2SC5551A-F-TD-E | B | 160.5/42.5 |
| Q1101 | 1530003860 | TRA | 2SC3950D | | |
| Q1102 | 1590000680 | S.TRA | DTC114EUA T106 | T | 165.5/133.8 |
| Q1103 | 1520000561 | S.TRA | 2SB1123 T-TD-E | B | 168.6/127.8 |
| Q1104 | 1530003860 | TRA | 2SC3950D | | |
| Q1105 | 1530003842 | S.TRA | 2SC5501A-4-TR-E | T | 166.5/142.1 |
| Q1205 | 1590001960 | S.TRA | XP4311(TX) | T | 158.8/55.6 |
| Q1209 | 1530003852 | S.TRA | 2SC5551A-F-TD-E | B | 121.1/34.9 |
| Q1210 | 1530003852 | S.TRA | 2SC5551A-F-TD-E | B | 111.6/34.9 |
| Q1211 | 1560001311 | S.FET | MMBFU310LT1G | T | 159.5/96.4 |
| Q1212 | 1560001311 | S.FET | MMBFU310LT1G | T | 153.5/96.4 |
| Q1213 | 1590000680 | S.TRA | DTC114EUA T106 | B | 156.9/123.8 |
| Q1214 | 1520000561 | S.TRA | 2SB1123 T-TD-E | B | 155.4/113.6 |
| Q1301 | 1530003151 | S.TRA | 2SC4673D-TD-E | T | 157.8/120.0 |
| Q1352 | 1530003852 | S.TRA | 2SC5551A-F-TD-E | B | 140.1/66.8 |
| Q1401 | 1530003842 | S.TRA | 2SC5501A-4-TR-E | T | 131.9/105.8 |
| Q1402 | 1530003021 | S.TRA | 2SC4402-3-TL-E | T | 123.4/111.8 |
| Q1403 | 1530003021 | S.TRA | 2SC4402-3-TL-E | T | 123.4/114.3 |
| Q1501 | 1530003451 | S.TRA | 2SC4835GRL | T | 133.5/143.5 |
| Q1502 | 1530003451 | S.TRA | 2SC4835GRL | T | 120.4/143.5 |
| Q1651 | 1530002601 | S.TRA | 2SC4215-O(TE85RF) | B | 105.7/140.4 |
| Q1701 | 1590001960 | S.TRA | XP4311(TX) | T | 106.6/43.9 |
| Q1702 | 1590001960 | S.TRA | XP4311(TX) | T | 148.9/147.2 |
| Q1703 | 1590001960 | S.TRA | XP4311(TX) | T | 146.4/147.2 |
| D101 | 1750000520 | S.DIO | DAN222TL | T | 41.8/86.2 |
| D152 | 1720000590 | S.VAR | MA357(TX) | T | 17.6/59.9 |
| D153 | 1790000491 | S.DIO | HSM88ASTR-E | T | 27.2/60.4 |

Eqv.= This component is equivalent to the REF No. component listed above, and may be substituted on parts orders and repairs.

M.=Mounted side (T: Mounted on the Top side, B: Mounted on the Bottom side)
S.=Surface mount

## [RXPLL-B UNIT]

| REF NO. | PARTS NO. | DESCRIPTION | | M. | H/V LOCATION |
|---|---|---|---|---|---|
| D154 | 1790000491 | S.DIO | HSM88ASTR-E | T | 27.2/63.8 |
| D201 | 1750000520 | S.DIO | DAN222TL | T | 32.4/34.1 |
| D220 | 1720000590 | S.VAR | MA357(TX) | T | 50.8/31.8 |
| D221 | 1720000590 | S.VAR | MA357(TX) | T | 52.9/31.8 |
| D222 | 1790000620 | S.DIO | MA77(TX) | T | 82.6/29.8 |
| D230 | 1720000590 | S.VAR | MA357(TX) | T | 50.8/44.2 |
| D231 | 1720000590 | S.VAR | MA357(TX) | T | 52.9/44.2 |
| D232 | 1790000620 | S.DIO | MA77(TX) | T | 82.6/42.3 |
| D240 | 1720000590 | S.VAR | MA357(TX) | T | 50.8/56.7 |
| D241 | 1720000590 | S.VAR | MA357(TX) | T | 52.9/56.7 |
| D242 | 1790000620 | S.DIO | MA77(TX) | T | 82.6/54.8 |
| D250 | 1720000590 | S.VAR | MA357(TX) | T | 50.8/69.2 |
| D252 | 1790000620 | S.DIO | MA77(TX) | T | 82.6/67.3 |
| D261 | 1720000590 | S.VAR | MA357(TX) | T | 52.9/81.7 |
| D262 | 1790000620 | S.DIO | MA77(TX) | T | 82.6/79.8 |
| D270 | 1720000590 | S.VAR | MA357(TX) | T | 50.8/94.2 |
| D271 | 1720000590 | S.VAR | MA357(TX) | T | 52.4/96.8 |
| D272 | 1790000620 | S.DIO | MA77(TX) | T | 82.5/92.0 |
| D341 | 1790000620 | S.DIO | MA77(TX) | T | 90.1/37.2 |
| D342 | 1160000070 | S.DIO | DAN202K T146 | B | 81.1/47.7 |
| D362 | 1790000620 | S.DIO | MA77(TX) | T | 88.3/65.5 |
| D363 | 1790000620 | S.DIO | MA77(TX) | T | 88.3/62.0 |
| D421 | 1790000620 | S.DIO | MA77(TX) | T | 92.0/85.0 |
| D441 | 1790000620 | S.DIO | MA77(TX) | T | 89.7/74.5 |
| D501 | 1750000520 | S.DIO | DAN222TL | T | 42.0/132.0 |
| D542 | 1720000590 | S.VAR | MA357(TX) | T | 62.5/139.6 |
| D1101 | 1790000620 | S.DIO | MA77(TX) | T | 177.6/146.6 |
| D1102 | 1790000620 | S.DIO | MA77(TX) | T | 177.6/148.4 |
| D1351 | 1750000581 | S.DIO | 1SV307(TPH3F) | T | 140.9/71.2 |
| D1653 | 1750000550 | S.DIO | 1SS355 TE-17 | T | 138.9/167.2 |
| D1654 | 1750000550 | S.DIO | 1SS355 TE-17 | T | 142.5/167.2 |
| D1701 | 1790001670 | S.DIO | RB706F-40T106 | T | 170.5/160.8 |
| FI101 | 2020002090 | S.CER | SFECV10M7FD00-R0 (SFECV10.7MA5S) | T | 26.0/73.9 |
| FI1401 | 2030000321 | S.MON | DSF753SDF 64.555 MHz (FL-359A) | T | 116.3/88.6 |
| FI1402 | 2030000311 | S.MON | DSF753SDF 64.555 MHz (FL-360A) | T | 107.0/88.6 |
| FI1403 | 2030000520 | S.MON | DSF753SDF 64.555 MHz (FL-397) | T | 126.0/85.5 |
| L1 | 6200003261 | S.COI | NLV32T-101J | T | 10.8/15.4 |
| L2 | 6200003261 | S.COI | NLV32T-101J | T | 29.0/19.9 |
| L10 | 6200003950 | S.COI | HF50ACC 322513-T | T | 38.6/14.7 |
| L11 | 6200003950 | S.COI | HF50ACC 322513-T | T | 13.8/15.4 |
| L12 | 6200003950 | S.COI | HF50ACC 322513-T | T | 16.8/15.4 |
| L13 | 6200003950 | S.COI | HF50ACC 322513-T | T | 29.0/15.4 |
| L20 | 6200003321 | S.COI | NLV32T-3R3J | T | 86.0/123.9 |
| L30 | 6200005491 | S.COI | NLV32T-331J | T | 20.6/120.0 |
| L101 | 6200001831 | S.COI | NLV32T-100J | T | 38.3/72.8 |
| L151 | 6130002970 | COI | LB-343 | | |
| L152 | 6200001831 | S.COI | NLV32T-100J | T | 30.0/54.5 |
| L201 | 6200005011 | S.COI | NLV25T-100J | T | 22.2/45.0 |
| L211 | 6200003661 | S.COI | NLV25T-R68J | B | 45.5/35.3 |
| L220 | 6200010790 | S.COI | C2520C-3R9G-A | T | 51.9/37.5 |
| L221 | 6190001421 | COI | #E526GN-110502 | | |
| L222 | 6200010790 | S.COI | C2520C-3R9G-A | T | 76.2/37.7 |
| L230 | 6200010830 | S.COI | C2520C-3R3G-A | T | 51.9/50.0 |
| L231 | 6190001421 | COI | #E526GN-110502 | | |
| L232 | 6200010830 | S.COI | C2520C-3R3G-A | T | 76.2/50.2 |
| L240 | 6200010830 | S.COI | C2520C-3R3G-A | T | 51.9/62.5 |
| L241 | 6190001421 | COI | #E526GN-110502 | | |
| L242 | 6200010830 | S.COI | C2520C-3R3G-A | T | 76.2/62.7 |
| L250 | 6200010820 | S.COI | C2520C-2R7G-A | T | 51.9/74.9 |
| L251 | 6190001421 | COI | #E526GN-110502 | | |
| L252 | 6200010820 | S.COI | C2520C-2R7G-A | T | 76.2/75.2 |
| L260 | 6200010820 | S.COI | C2520C-2R7G-A | T | 51.9/87.5 |
| L261 | 6190001411 | COI | #E526GN-110501 | | |
| L262 | 6200010820 | S.COI | C2520C-2R7G-A | T | 76.2/87.7 |
| L270 | 6200010810 | S.COI | C2520C-2R2G-A | T | 51.9/99.8 |
| L271 | 6190001411 | COI | #E526GN-110501 | | |
| L272 | 6200010810 | S.COI | C2520C-2R2G-A | T | 76.0/100.2 |
| L280 | 6200005011 | S.COI | NLV25T-100J | T | 67.4/25.5 |
| L302 | 6200001831 | S.COI | NLV32T-100J | T | 89.4/42.7 |
| L331 | 6200002641 | S.COI | NLV25T-R15J | T | 95.1/34.1 |
| L332 | 6200002411 | S.COI | NLV25T-056J | B | 93.2/36.0 |
| L341 | 6200003261 | S.COI | NLV32T-101J | T | 87.1/39.7 |
| L351 | 6200001831 | S.COI | NLV32T-100J | T | 91.3/62.1 |
| L421 | 6200008641 | S.COI | NLV32T-391J | T | 87.1/81.0 |
| L441 | 6200002601 | S.COI | NLV25T-047J | T | 91.9/72.4 |
| L442 | 6200010730 | S.COI | C2520C-68NG-A | T | 90.6/78.2 |
| L451 | 6200002641 | S.COI | NLV25T-R15J | T | 95.0/81.0 |
| L452 | 6200003261 | S.COI | NLV32T-101J | T | 87.1/78.0 |
| L501 | 6200001831 | S.COI | NLV32T-100J | T | 31.0/125.8 |
| L530 | 6200003171 | S.COI | NLV32T-330J | T | 14.6/134.9 |
| L531 | 6200003171 | S.COI | NLV32T-330J | T | 14.6/130.8 |
| L532 | 6200003171 | S.COI | NLV32T-330J | T | 15.5/127.1 |
| L541 | 6200010790 | S.COI | C2520C-3R9G-A | T | 56.3/139.6 |
| L542 | 6190001421 | COI | #E526GN-110502 | | |
| L543 | 6200010790 | S.COI | C2520C-3R9G-A | T | 68.5/147.9 |
| L544 | 6200003261 | S.COI | NLV32T-101J | B | 65.9/142.1 |
| L545 | 6200003261 | S.COI | NLV32T-101J | B | 51.3/139.6 |
| L561 | 6200003261 | S.COI | NLV32T-101J | B | 64.0/156.0 |
| L562 | 6200001831 | S.COI | NLV32T-100J | B | 74.7/151.9 |
| L565 | 6150004250 | COI | LS-471A (C-14922) | | |
| L566 | 6150004250 | COI | LS-471A (C-14922) | | |
| L591 | 6200007790 | S.COI | LQW2BHNR15J03L | T | 60.5/171.5 |
| L601 | 6200001831 | S.COI | NLV32T-100J | T | 49.5/123.6 |
| L602 | 6200002641 | S.COI | NLV25T-R15J | T | 54.1/118.0 |
| L603 | 6200002841 | S.COI | NLV25T-R22J | T | 57.1/117.2 |
| L651 | 6200009300 | S.COI | ELJPA 100KF 10U | T | 15.6/176.3 |
| L681 | 6200002981 | S.COI | NLV32T-R56J | T | 37.4/176.2 |

## [RXPLL-B UNIT]

| REF NO. | PARTS NO. | DESCRIPTION | | M. | H/V LOCATION |
|---|---|---|---|---|---|
| L682 | 6200003041 | S.COI | NLV32T-R68J | T | 37.8/172.6 |
| L683 | 6200003051 | S.COI | NLV32T-R82J | T | 40.2/166.2 |
| L701 | 6200003261 | S.COI | NLV32T-101J | T | 23.6/120.0 |
| L702 | 6150004971 | S.COI | LS-522-LF | T | 37.6/108.6 |
| L703 | 6150004971 | S.COI | LS-522-LF | T | 37.5/118.5 |
| L1001 | 6190001650 | COI | ELC06D102E | | |
| L1002 | 6140004400 | COI | LR-499 | | |
| L1004 | 6140003890 | COI | LR-488 | | |
| L1005 | 6180001000 | COI | LAL 04NA 102K | | |
| L1006 | 6140003900 | COI | LR-489 | | |
| L1007 | 6140003800 | COI | LR-439 | | |
| L1008 | 6190001650 | COI | ELC06D102E | | |
| L1009 | 6190001650 | COI | ELC06D102E | | |
| L1010 | 6140003880 | COI | LR-486 | | |
| L1011 | 6140003880 | COI | LR-486 | | |
| L1012 | 6140003800 | COI | LR-439 | | |
| L1013 | 6200010680 | S.COI | C2520C-R22G-A (0.22U) | T | 155.0/55.2 |
| L1014 | 6200010680 | S.COI | C2520C-R22G-A (0.22U) | T | 158.0/12.5 |
| L1015 | 6200007790 | S.COI | LQW2BHNR15J03L | B | 163.6/27.5 |
| L1052 | 6200010740 | S.COI | C2520C-R27G-A | T | 177.8/74.6 |
| L1053 | 6200010740 | S.COI | C2520C-R27G-A | T | 173.8/73.5 |
| L1054 | 6200010740 | S.COI | C2520C-R27G-A | T | 169.4/72.6 |
| L1055 | 6140003960 | COI | LR-495 | | |
| L1056 | 6200010730 | S.COI | C2520C-68NG-A | T | 171.0/83.8 |
| L1058 | 6190001631 | COI | #E544EN-100021 | | |
| L1060 | 6200010730 | S.COI | C2520C-68NG-A | T | 149.1/76.4 |
| L1062 | 6200011450 | S.COI | C2520C-R39G-A | T | 145.1/81.5 |
| L1063 | 6200010650 | S.COI | C2520C-R12G-A (0.12U) | T | 141.0/82.6 |
| L1071 | 6200007780 | S.COI | LQW2BHNR12J03L | B | 164.9/79.2 |
| L1072 | 6200007780 | S.COI | LQW2BHNR12J03L | B | 168.0/76.1 |
| L1091 | 6200003950 | S.COI | HF50ACC 322513-T | B | 171.1/149.0 |
| L1092 | 6200003950 | S.COI | HF50ACC 322513-T | T | 149.8/136.5 |
| L1093 | 6200003950 | S.COI | HF50ACC 322513-T | T | 157.0/135.2 |
| L1101 | 6140003920 | COI | LR-491 | | |
| L1102 | 6200010650 | S.COI | C2520C-R12G-A (0.12U) | T | 176.9/117.9 |
| L1103 | 6180001250 | COI | LAL 04NA 3R3K | | |
| L1104 | 6200010870 | S.COI | C2520C-R33G-A (0.33U) | T | 178.4/135.9 |
| L1105 | 6140003910 | COI | LR-490 | | |
| L1151 | 6140004640 | COI | LR-519 | | |
| L1201 | 6200007780 | S.COI | LQW2BHNR12J03L | B | 119.4/17.5 |
| L1208 | 6140003800 | COI | LR-439 | | |
| L1209 | 6200001831 | S.COI | NLV32T-100J | T | 121.1/20.8 |
| L1210 | 6140004440 | COI | LR-503 | | |
| L1211 | 6200009690 | S.COI | LQH43CN101K03L | T | 115.7/34.6 |
| L1212 | 6200001831 | S.COI | NLV32T-100J | T | 106.8/20.8 |
| L1213 | 6140004440 | COI | LR-503 | | |
| L1214 | 6200009690 | S.COI | LQH43CN101K03L | T | 105.9/34.8 |
| L1216 | 6140003800 | COI | LR-439 | | |
| L1217 | 6200007750 | S.COI | LQW2BHN56NJ03L | T | 148.0/63.8 |
| L1218 | 6200007770 | S.COI | LQW2BHNR10J03L | T | 153.3/65.2 |
| L1219 | 6200007790 | S.COI | LQW2BHNR15J03L | T | 153.3/68.5 |
| L1220 | 6140000930 | COI | LR-116 | | |
| L1221 | 6200003261 | S.COI | NLV32T-101J | B | 149.6/110.9 |
| L1222 | 6150005460 | COI | LS-559 7K7 | | |
| L1223 | 6200007750 | S.COI | LQW2BHN56NJ03L | B | 151.3/100.8 |
| L1228 | 6200010870 | S.COI | C2520C-R33G-A (0.33U) | T | 158.8/71.4 |
| L1229 | 6200003950 | S.COI | HF50ACC 322513-T | B | 164.7/115.0 |
| L1301 | 6200008090 | S.COI | LQW2BHN68NJ03L | T | 157.2/111.9 |
| L1302 | 6200008090 | S.COI | LQW2BHN68NJ03L | T | 156.4/115.5 |
| L1303 | 6200008090 | S.COI | LQW2BHN68NJ03L | T | 153.4/117.5 |
| L1304 | 6200010870 | S.COI | C2520C-R33G-A (0.33U) | T | 153.8/123.0 |
| L1305 | 6200003001 | S.COI | NLV32T-R22J | T | 159.2/124.5 |
| L1306 | 6200001831 | S.COI | NLV32T-100J | B | 152.8/118.7 |
| L1307 | 6200003001 | S.COI | NLV32T-R22J | T | 153.4/112.0 |
| L1351 | 6200001831 | S.COI | NLV32T-100J | T | 143.0/76.4 |
| L1353 | 6200010740 | S.COI | C2520C-R27G-A | T | 141.6/67.6 |
| L1354 | 6200001831 | S.COI | NLV32T-100J | T | 136.5/68.1 |
| L1401 | 6150004280 | COI | LS-484B (C-14927) | | |
| L1402 | 6150004280 | COI | LS-484B (C-14927) | | |
| L1403 | 6150004280 | COI | LS-484B (C-14927) | | |
| L1404 | 6150004280 | COI | LS-484B (C-14927) | | |
| L1405 | 6200007770 | S.COI | LQW2BHNR10J03L | B | 112.5/111.4 |
| L1406 | 6200007750 | S.COI | LQW2BHN56NJ03L | B | 116.6/111.4 |
| L1407 | 6140003930 | COI | LR-492 | | |
| L1408 | 6190001621 | COI | #E544EN-100028 | | |
| L1409 | 6200003191 | S.COI | NLV32T-470J | B | 135.8/125.4 |
| L1410 | 6150004280 | COI | LS-484B (C-14927) | | |
| L1411 | 6150004280 | COI | LS-484B (C-14927) | | |
| L1501 | 6200003520 | S.COI | ELJFB 102K-F | T | 142.1/145.1 |
| L1652 | 6200002520 | S.COI | ELJNC R18K-F | T | 112.9/133.1 |
| L1653 | 6200001831 | S.COI | NLV32T-100J | B | 105.4/124.6 |
| L1654 | 6200001831 | S.COI | NLV32T-100J | B | 112.4/141.9 |
| L1655 | 6200001831 | S.COI | NLV32T-100J | B | 124.7/139.8 |
| L1701 | 6200001831 | S.COI | NLV32T-100J | T | 167.0/160.0 |
| L1702 | 6200003950 | S.COI | HF50ACC 322513-T | T | 175.6/169.8 |
| L1703 | 6200003950 | S.COI | HF50ACC 322513-T | T | 172.6/169.8 |
| L1704 | 6200003950 | S.COI | HF50ACC 322513-T | T | 169.6/169.8 |
| L1705 | 6200003950 | S.COI | HF50ACC 322513-T | T | 165.5/169.8 |
| L1803 | 6200003950 | S.COI | HF50ACC 322513-T | B | 132.1/54.8 |
| L1804 | 6200003950 | S.COI | HF50ACC 322513-T | B | 118.0/154.8 |
| L1805 | 6200003950 | S.COI | HF50ACC 322513-T | B | 155.2/132.0 |
| L1807 | 6200003950 | S.COI | HF50ACC 322513-T | B | 118.0/151.3 |
| L1808 | 6200003950 | S.COI | HF50ACC 322513-T | B | 141.3/162.0 |
| L1809 | 6200003950 | S.COI | HF50ACC 322513-T | B | 149.6/115.6 |
| R1 | 7030005871 | S.RES | ERA3YKD 104V (100K) | T | 32.5/19.2 |
| R2 | 7030005321 | S.RES | ERA3YED 103V (10K) | T | 31.2/19.2 |
| R3 | 7030003550 | S.RES | ERJ3GEYJ 822 V (8.2K) | T | 16.9/23.5 |
| R4 | 7030003550 | S.RES | ERJ3GEYJ 822 V (8.2K) | T | 16.9/24.8 |
| R5 | 7030003550 | S.RES | ERJ3GEYJ 822 V (8.2K) | T | 13.3/31.3 |
| R6 | 7030003550 | S.RES | ERJ3GEYJ 822 V (8.2K) | T | 13.3/30.0 |
| R7 | 7030003500 | S.RES | ERJ3GEYJ 332 V (3.3K) | B | 26.8/13.0 |
| R8 | 7030003470 | S.RES | ERJ3GEYJ 182 V (1.8K) | B | 28.2/14.7 |
| R9 | 7030003680 | S.RES | ERJ3GEYJ 104 V (100K) | B | 27.5/10.6 |

Eqv.= This component is equivalent to the REF No. component listed above, and may be substituted on parts orders and repairs.

M.=Mounted side (T: Mounted on the Top side, B: Mounted on the Bottom side)
S.=Surface mount

## [RXPLL-B UNIT]

| REF NO. | PARTS NO. | DESCRIPTION | M. | H/V LOCATION |
|---|---|---|---|---|
| R10 | 7030003360 | S.RES ERJ3GEYJ 221 V (220) | T | 19.0/16.0 |
| R11 | 7030003360 | S.RES ERJ3GEYJ 221 V (220) | T | 20.3/16.0 |
| R12 | 7030003360 | S.RES ERJ3GEYJ 221 V (220) | T | 22.5/16.0 |
| R13 | 7030003360 | S.RES ERJ3GEYJ 221 V (220) | T | 23.8/16.0 |
| R14 | 7030003360 | S.RES ERJ3GEYJ 221 V (220) | T | 25.1/16.0 |
| R15 | 7030003360 | S.RES ERJ3GEYJ 221 V (220) | T | 26.4/16.3 |
| R16 | 7030003360 | S.RES ERJ3GEYJ 221 V (220) | T | 32.5/15.4 |
| R17 | 7030003360 | S.RES ERJ3GEYJ 221 V (220) | T | 33.8/15.4 |
| R30 | 7030003240 | S.RES ERJ3GEYJ 220 V (22) | T | 21.7/113.7 |
| R31 | 7030003600 | S.RES ERJ3GEYJ 223 V (22K) | T | 20.4/111.1 |
| R32 | 7030003320 | S.RES ERJ3GEYJ 101 V (100) | T | 23.0/113.7 |
| R33 | 7030003340 | S.RES ERJ3GEYJ 151 V (150) | T | 19.1/115.0 |
| R51 | 7030011030 | S.RES ERJ1TYJ 270U (27) | T | 66.3/13.9 |
| R61 | 7030011030 | S.RES ERJ1TYJ 270U (27) | T | 45.1/13.9 |
| R101 | 7030003800 | S.RES ERJ3GEYJ 105 V (1M) | T | 34.2/101.5 |
| R102 | 7030003860 | S.RES ERJ3GE JPW V | B | 35.6/88.7 |
| R103 | 7030007230 | S.RES ERA3YED 102V (1K) | T | 25.1/100.3 |
| R104 | 7030007230 | S.RES ERA3YED 102V (1K) | T | 26.4/100.3 |
| R105 | 7030007230 | S.RES ERA3YED 102V (1K) | T | 27.8/100.3 |
| R106 | 7030003360 | S.RES ERJ3GEYJ 221 V (220) | T | 29.1/100.3 |
| R107 | 7030003320 | S.RES ERJ3GEYJ 101 V (100) | T | 38.1/101.5 |
| R108 | 7030007230 | S.RES ERA3YED 102V (1K) | T | 28.9/79.0 |
| R109 | 7030007230 | S.RES ERA3YED 102V (1K) | T | 41.9/84.5 |
| R110 | 7030007220 | S.RES ERA3YED 202V (2K) | T | 14.6/100.5 |
| R111 | 7030007220 | S.RES ERA3YED 202V (2K) | T | 17.2/100.5 |
| R112 | 7030007220 | S.RES ERA3YED 202V (2K) | T | 17.2/99.2 |
| R113 | 7030007220 | S.RES ERA3YED 202V (2K) | T | 17.2/97.9 |
| R114 | 7030007220 | S.RES ERA3YED 202V (2K) | T | 17.2/96.6 |
| R115 | 7030007220 | S.RES ERA3YED 202V (2K) | T | 17.2/95.2 |
| R116 | 7030007220 | S.RES ERA3YED 202V (2K) | T | 17.2/93.9 |
| R117 | 7030007220 | S.RES ERA3YED 202V (2K) | T | 17.2/92.6 |
| R118 | 7030007200 | S.RES ERA3YEB 202V (2K) | T | 17.2/91.3 |
| R119 | 7030007200 | S.RES ERA3YEB 202V (2K) | T | 17.2/89.6 |
| R120 | 7030007200 | S.RES ERA3YEB 202V (2K) | T | 17.2/87.0 |
| R121 | 7030007200 | S.RES ERA3YEB 202V (2K) | T | 17.2/84.4 |
| R122 | 7030007200 | S.RES ERA3YEB 202V (2K) | T | 17.2/81.8 |
| R123 | 7030007230 | S.RES ERA3YED 102V (1K) | T | 14.6/99.2 |
| R124 | 7030007230 | S.RES ERA3YED 102V (1K) | T | 14.6/97.9 |
| R125 | 7030007230 | S.RES ERA3YED 102V (1K) | T | 14.6/96.6 |
| R126 | 7030007230 | S.RES ERA3YED 102V (1K) | T | 14.6/95.2 |
| R127 | 7030007230 | S.RES ERA3YED 102V (1K) | T | 14.6/93.9 |
| R128 | 7030007230 | S.RES ERA3YED 102V (1K) | T | 14.6/92.6 |
| R129 | 7030007210 | S.RES ERA3YEB 102V (1K) | T | 14.6/91.3 |
| R130 | 7030007210 | S.RES ERA3YEB 102V (1K) | T | 14.6/89.6 |
| R131 | 7030007210 | S.RES ERA3YEB 102V (1K) | T | 14.6/88.3 |
| R132 | 7030007210 | S.RES ERA3YEB 102V (1K) | T | 14.6/87.0 |
| R133 | 7030007210 | S.RES ERA3YEB 102V (1K) | T | 14.6/85.7 |
| R134 | 7030009861 | S.RES ERA3YED 471V (470) | T | 14.6/84.4 |
| R135 | 7030003860 | S.RES ERJ3GE JPW V | T | 30.4/75.8 |
| R136 | 7030003800 | S.RES ERJ3GEYJ 105 V (1M) | T | 33.0/77.1 |
| R137 | 7030003200 | S.RES ERJ3GEYJ 100 V (10) | T | 35.5/75.8 |
| R138 | 7030003860 | S.RES ERJ3GE JPW V | T | 16.8/78.6 |
| R139 | 7030003860 | S.RES ERJ3GE JPW V | T | 17.6/75.8 |
| R150 | 7030003330 | S.RES ERJ3GEYJ 121 V (120) | B | 37.9/86.2 |
| R151 | 7030003220 | S.RES ERJ3GEYJ 150 V (15) | B | 38.6/88.1 |
| R152 | 7030005871 | S.RES ERA3YKD 104V (100K) | B | 36.2/82.6 |
| R153 | 7030005321 | S.RES ERA3YED 103V (10K) | T | 19.2/62.7 |
| R154 | 7030003320 | S.RES ERJ3GEYJ 101 V (100) | B | 26.3/54.1 |
| R155 | 7030003350 | S.RES ERJ3GEYJ 181 V (180) | B | 23.0/54.1 |
| R156 | 7030005871 | S.RES ERA3YKD 104V (100K) | T | 24.6/53.1 |
| R157 | 7030005871 | S.RES ERA3YKD 104V (100K) | T | 26.9/58.0 |
| R158 | 7030003340 | S.RES ERJ3GEYJ 151 V (150) | T | 30.0/57.3 |
| R159 | 7030003320 | S.RES ERJ3GEYJ 101 V (100) | B | 33.6/61.4 |
| R160 | 7030003360 | S.RES ERJ3GEYJ 221 V (220) | B | 33.6/59.6 |
| R161 | 7030003640 | S.RES ERJ3GEYJ 473 V (47K) | B | 33.6/54.8 |
| R163 | 7030003220 | S.RES ERJ3GEYJ 150 V (15) | B | 30.3/56.6 |
| R164 | 7030003310 | S.RES ERJ3GEYJ 820 V (82) | B | 34.1/70.4 |
| R165 | 7030003320 | S.RES ERJ3GEYJ 101 V (100) | B | 30.8/70.4 |
| R166 | 7030003320 | S.RES ERJ3GEYJ 101 V (100) | B | 30.8/72.2 |
| R167 | 7030003240 | S.RES ERJ3GEYJ 220 V (22) | B | 37.4/75.8 |
| R168 | 7030003360 | S.RES ERJ3GEYJ 221 V (220) | B | 34.1/75.8 |
| R169 | 7030003640 | S.RES ERJ3GEYJ 473 V (47K) | B | 30.8/75.8 |
| R202 | 7030007230 | S.RES ERA3YED 102V (1K) | T | 22.2/39.7 |
| R203 | 7030007230 | S.RES ERA3YED 102V (1K) | T | 22.2/38.4 |
| R204 | 7030003360 | S.RES ERJ3GEYJ 221 V (220) | T | 22.2/37.1 |
| R205 | 7030005321 | S.RES ERA3YED 103V (10K) | T | 27.4/34.0 |
| R206 | 7030003220 | S.RES ERJ3GEYJ 150 V (15) | T | 31.1/45.7 |
| R210 | 7030005351 | S.RES ERA3YED 182V (1.8K) | T | 35.7/37.5 |
| R217 | 7030009651 | S.RES ERA3YHD 820V (82) | B | 40.5/42.8 |
| R219 | 7030009691 | S.RES ERA3YED 101V (100) | B | 40.1/35.7 |
| R220 | 7030005871 | S.RES ERA3YKD 104V (100K) | T | 73.2/37.6 |
| R221 | 7030005871 | S.RES ERA3YKD 104V (100K) | T | 72.3/30.9 |
| R222 | 7030003400 | S.RES ERJ3GEYJ 471 V (470) | T | 81.4/38.3 |
| R223 | 7030007230 | S.RES ERA3YED 102V (1K) | T | 81.9/31.9 |
| R224 | 7030003320 | S.RES ERJ3GEYJ 101 V (100) | T | 73.2/40.2 |
| R230 | 7030005871 | S.RES ERA3YKD 104V (100K) | T | 73.2/50.1 |
| R231 | 7030005871 | S.RES ERA3YKD 104V (100K) | T | 72.3/43.3 |
| R232 | 7030003360 | S.RES ERJ3GEYJ 221 V (220) | T | 81.4/50.8 |
| R233 | 7030007230 | S.RES ERA3YED 102V (1K) | T | 81.9/44.4 |
| R234 | 7030003320 | S.RES ERJ3GEYJ 101 V (100) | T | 73.2/52.7 |
| R240 | 7030005871 | S.RES ERA3YKD 104V (100K) | T | 73.2/62.6 |
| R241 | 7030005871 | S.RES ERA3YKD 104V (100K) | T | 72.3/55.8 |
| R242 | 7030003360 | S.RES ERJ3GEYJ 221 V (220) | T | 81.4/63.3 |
| R243 | 7030007230 | S.RES ERA3YED 102V (1K) | T | 81.9/56.9 |
| R244 | 7030003320 | S.RES ERJ3GEYJ 101 V (100) | T | 73.2/65.2 |
| R250 | 7030005871 | S.RES ERA3YKD 104V (100K) | T | 73.2/75.1 |
| R251 | 7030005871 | S.RES ERA3YKD 104V (100K) | T | 72.3/68.4 |
| R252 | 7030003360 | S.RES ERJ3GEYJ 221 V (220) | T | 81.4/75.8 |
| R253 | 7030007230 | S.RES ERA3YED 102V (1K) | T | 81.9/69.4 |
| R254 | 7030003320 | S.RES ERJ3GEYJ 101 V (100) | T | 73.2/77.7 |
| R260 | 7030005871 | S.RES ERA3YKD 104V (100K) | T | 73.2/87.6 |
| R261 | 7030005871 | S.RES ERA3YKD 104V (100K) | T | 72.3/80.9 |
| R262 | 7030003400 | S.RES ERJ3GEYJ 471 V (470) | T | 81.4/88.3 |
| R263 | 7030007230 | S.RES ERA3YED 102V (1K) | T | 81.9/81.9 |
| R264 | 7030003320 | S.RES ERJ3GEYJ 101 V (100) | T | 73.2/90.2 |

## [RXPLL-B UNIT]

| REF NO. | PARTS NO. | DESCRIPTION | M. | H/V LOCATION |
|---|---|---|---|---|
| R270 | 7030005871 | S.RES ERA3YKD 104V (100K) | T | 73.2/99.5 |
| R271 | 7030005871 | S.RES ERA3YKD 104V (100K) | T | 72.3/92.8 |
| R272 | 7030003360 | S.RES ERJ3GEYJ 221 V (220) | T | 81.4/100.8 |
| R273 | 7030007230 | S.RES ERA3YED 102V (1K) | T | 81.9/94.0 |
| R274 | 7030003320 | S.RES ERJ3GEYJ 101 V (100) | T | 73.2/102.1 |
| R301 | 7030003200 | S.RES ERJ3GEYJ 100 V (10) | T | 86.5/30.6 |
| R302 | 7030007230 | S.RES ERA3YED 102V (1K) | T | 86.5/29.3 |
| R303 | 7030003360 | S.RES ERJ3GEYJ 221 V (220) | T | 92.1/28.0 |
| R304 | 7030003490 | S.RES ERJ3GEYJ 272 V (2.7K) | T | 94.0/30.1 |
| R305 | 7030003510 | S.RES ERJ3GEYJ 392 V (3.9K) | T | 95.3/30.1 |
| R306 | 7030003360 | S.RES ERJ3GEYJ 221 V (220) | T | 94.8/32.2 |
| R307 | 7030009841 | S.RES ERA3YHD 330V (33) | T | 92.1/32.2 |
| R308 | 7030009851 | S.RES ERA3YED 271V (270) | B | 92.6/43.4 |
| R309 | 7030003540 | S.RES ERJ3GEYJ 682 V (6.8K) | B | 89.1/47.0 |
| R310 | 7030003500 | S.RES ERJ3GEYJ 332 V (3.3K) | B | 92.6/47.0 |
| R311 | 7030003350 | S.RES ERJ3GEYJ 181 V (180) | B | 89.1/45.2 |
| R312 | 7030003360 | S.RES ERJ3GEYJ 221 V (220) | B | 92.5/27.8 |
| R313 | 7030003490 | S.RES ERJ3GEYJ 272 V (2.7K) | B | 91.2/23.1 |
| R314 | 7030003510 | S.RES ERJ3GEYJ 392 V (3.9K) | B | 88.3/23.1 |
| R315 | 7030003360 | S.RES ERJ3GEYJ 221 V (220) | B | 87.6/25.1 |
| R316 | 7030003280 | S.RES ERJ3GEYJ 470 V (47) | B | 78.3/26.2 |
| R317 | 7030006220 | S.RES ERJ12YJ470U (47) | B | 90.1/31.5 |
| R318 | 7030009841 | S.RES ERA3YHD 330V (33) | B | 92.6/41.6 |
| R341 | 7030007230 | S.RES ERA3YED 102V (1K) | T | 92.1/40.1 |
| R342 | 7030005321 | S.RES ERA3YED 103V (10K) | T | 86.5/32.2 |
| R343 | 7030007230 | S.RES ERA3YED 102V (1K) | T | 89.3/34.8 |
| R351 | 7030003200 | S.RES ERJ3GEYJ 100 V (10) | B | 89.1/52.4 |
| R352 | 7030010980 | S.RES ERA3YHD 470V (47) | T | 89.3/55.8 |
| R353 | 7030009591 | S.RES ERA3YED 472V (4.7K) | T | 89.3/54.5 |
| R354 | 7030009591 | S.RES ERA3YED 472V (4.7K) | T | 89.3/50.4 |
| R355 | 7030009591 | S.RES ERA3YED 472V (4.7K) | T | 89.3/53.2 |
| R356 | 7030003320 | S.RES ERJ3GEYJ 101 V (100) | T | 89.3/57.1 |
| R357 | 7310005390 | S.TRI EVM3VBQ3 4.7K (4.7K) | T | 93.6/52.7 |
| R358 | 7030010980 | S.RES ERA3YHD 470V (47) | T | 94.9/56.4 |
| R359 | 7030003320 | S.RES ERJ3GEYJ 101 V (100) | T | 94.9/59.0 |
| R360 | 7030003320 | S.RES ERJ3GEYJ 101 V (100) | B | 92.6/63.9 |
| R361 | 7030003490 | S.RES ERJ3GEYJ 272 V (2.7K) | B | 89.2/62.1 |
| R362 | 7030003510 | S.RES ERJ3GEYJ 392 V (3.9K) | B | 92.6/60.3 |
| R363 | 7030003320 | S.RES ERJ3GEYJ 101 V (100) | B | 92.6/65.7 |
| R364 | 7030003410 | S.RES ERJ3GEYJ 561 V (560) | T | 94.9/82.9 |
| R365 | 7030007860 | S.RES ERJ3GEYJ 8R2V (8.2) | T | 92.0/83.5 |
| R366 | 7030003410 | S.RES ERJ3GEYJ 561 V (560) | T | 94.9/84.2 |
| R368 | 7030005321 | S.RES ERA3YED 103V (10K) | T | 86.1/59.6 |
| R369 | 7030008240 | S.RES ERJ12Y0R00U | B | 95.4/57.2 |
| R421 | 7030007230 | S.RES ERA3YED 102V (1K) | T | 92.1/87.9 |
| R425 | 7030003410 | S.RES ERJ3GEYJ 561 V (560) | T | 90.1/81.6 |
| R427 | 7030003320 | S.RES ERJ3GEYJ 101 V (100) | B | 86.8/87.3 |
| R428 | 7030009861 | S.RES ERA3YED 471V (470) | B | 92.1/88.0 |
| R441 | 7030007230 | S.RES ERA3YED 102V (1K) | T | 92.1/75.6 |
| R442 | 7030005321 | S.RES ERA3YED 103V (10K) | T | 88.9/71.0 |
| R443 | 7030007230 | S.RES ERA3YED 102V (1K) | T | 88.9/72.3 |
| R501 | 7030003360 | S.RES ERJ3GEYJ 221 V (220) | T | 29.2/153.1 |
| R502 | 7030007230 | S.RES ERA3YED 102V (1K) | T | 27.9/153.1 |
| R503 | 7030007230 | S.RES ERA3YED 102V (1K) | T | 26.5/153.1 |
| R504 | 7030007230 | S.RES ERA3YED 102V (1K) | T | 25.2/153.1 |
| R506 | 7030003800 | S.RES ERJ3GEYJ 105 V (1M) | T | 34.1/154.5 |
| R509 | 7030003440 | S.RES ERJ3GEYJ 102 V (1K) | T | 42.5/136.1 |
| R510 | 7030007220 | S.RES ERA3YED 202V (2K) | T | 14.6/153.6 |
| R511 | 7030007220 | S.RES ERA3YED 202V (2K) | T | 17.2/153.6 |
| R512 | 7030007220 | S.RES ERA3YED 202V (2K) | T | 17.2/152.3 |
| R513 | 7030007220 | S.RES ERA3YED 202V (2K) | T | 17.2/151.0 |
| R514 | 7030007220 | S.RES ERA3YED 202V (2K) | T | 17.2/149.7 |
| R515 | 7030007220 | S.RES ERA3YED 202V (2K) | T | 17.2/148.3 |
| R516 | 7030007220 | S.RES ERA3YED 202V (2K) | T | 17.2/147.0 |
| R517 | 7030007220 | S.RES ERA3YED 202V (2K) | T | 17.2/145.7 |
| R518 | 7030007200 | S.RES ERA3YEB 202V (2K) | T | 17.2/144.4 |
| R519 | 7030007200 | S.RES ERA3YEB 202V (2K) | T | 17.2/142.7 |
| R520 | 7030007200 | S.RES ERA3YEB 202V (2K) | T | 17.2/141.4 |
| R521 | 7030007200 | S.RES ERA3YEB 202V (2K) | T | 17.2/140.1 |
| R522 | 7030007200 | S.RES ERA3YEB 202V (2K) | T | 17.2/138.8 |
| R523 | 7030007230 | S.RES ERA3YED 102V (1K) | T | 14.6/152.3 |
| R524 | 7030007230 | S.RES ERA3YED 102V (1K) | T | 14.6/151.0 |
| R525 | 7030007230 | S.RES ERA3YED 102V (1K) | T | 14.6/149.7 |
| R526 | 7030007230 | S.RES ERA3YED 102V (1K) | T | 14.6/148.3 |
| R527 | 7030007230 | S.RES ERA3YED 102V (1K) | T | 14.6/147.0 |
| R528 | 7030007230 | S.RES ERA3YED 102V (1K) | T | 14.6/145.7 |
| R529 | 7030007210 | S.RES ERA3YEB 102V (1K) | T | 14.6/144.4 |
| R530 | 7030007210 | S.RES ERA3YEB 102V (1K) | T | 14.6/142.7 |
| R531 | 7030007210 | S.RES ERA3YEB 102V (1K) | T | 14.6/141.4 |
| R532 | 7030007210 | S.RES ERA3YEB 102V (1K) | T | 14.6/140.1 |
| R533 | 7030007210 | S.RES ERA3YEB 102V (1K) | T | 14.6/138.8 |
| R534 | 7030003860 | S.RES ERJ3GE JPW V | T | 22.2/127.6 |
| R535 | 7030003800 | S.RES ERJ3GEYJ 105 V (1M) | T | 24.8/129.8 |
| R536 | 7030003200 | S.RES ERJ3GEYJ 100 V (10) | T | 28.0/128.3 |
| R537 | 7030007230 | S.RES ERA3YED 102V (1K) | T | 30.3/131.9 |
| R538 | 7030003360 | S.RES ERJ3GEYJ 221 V (220) | B | 34.9/146.5 |
| R540 | 7030007230 | S.RES ERA3YED 102V (1K) | B | 52.3/142.8 |
| R544 | 7030005871 | S.RES ERA3YKD 104V (100K) | T | 69.4/140.4 |
| R545 | 7030005871 | S.RES ERA3YKD 104V (100K) | T | 69.4/139.1 |
| R546 | 7030009861 | S.RES ERA3YED 471V (470) | T | 67.5/150.7 |
| R548 | 7030009591 | S.RES ERA3YED 472V (4.7K) | B | 43.4/136.5 |
| R550 | 7030009691 | S.RES ERA3YED 101V (100) | B | 43.4/134.7 |
| R554 | 7030009891 | S.RES ERA3YED 151V (150) | B | 47.2/133.9 |
| R555 | 7030003380 | S.RES ERJ3GEYJ 331 V (330) | B | 61.9/142.1 |
| R556 | 7030005981 | S.RES ERA3YED 333V (33K) | B | 44.3/128.2 |
| R561 | 7030003200 | S.RES ERJ3GEYJ 100 V (10) | T | 71.3/148.5 |
| R562 | 7030003360 | S.RES ERJ3GEYJ 221 V (220) | T | 65.7/155.5 |
| R563 | 7030003490 | S.RES ERJ3GEYJ 272 V (2.7K) | T | 70.5/151.9 |
| R564 | 7030003510 | S.RES ERJ3GEYJ 392 V (3.9K) | T | 70.5/150.6 |
| R565 | 7030003360 | S.RES ERJ3GEYJ 221 V (220) | T | 67.0/155.5 |
| R570 | 7030003230 | S.RES ERJ3GEYJ 180 V (18) | T | 63.1/155.5 |
| R571 | 7030003230 | S.RES ERJ3GEYJ 180 V (18) | T | 58.5/155.0 |
| R572 | 7030003290 | S.RES ERJ3GEYJ 560 V (56) | B | 57.2/156.3 |
| R573 | 7030003270 | S.RES ERJ3GEYJ 390 V (39) | T | 61.8/155.5 |
| R574 | 7030003240 | S.RES ERJ3GEYJ 220 V (22) | T | 60.5/155.5 |

Eqv.= This component is equivalent to the REF No. component listed above, and may be substituted on parts orders and repairs.

M.=Mounted side (T: Mounted on the Top side, B: Mounted on the Bottom side)
S.=Surface mount

## [RXPLL-B UNIT]

| REF NO. | PARTS NO. | DESCRIPTION | M. | H/V LOCATION |
|---|---|---|---|---|
| R575 | 7030003270 | S.RES ERJ3GEYJ 390 V (39) | T | 58.5/156.3 |
| R580 | 7030009861 | S.RES ERA3YED 471V (470) | T | 41.9/153.7 |
| R581 | 7030003360 | S.RES ERJ3GEYJ 221 V (220) | T | 41.9/145.5 |
| R582 | 7030003600 | S.RES ERJ3GEYJ 223 V (22K) | T | 41.9/149.5 |
| R587 | 7030003300 | S.RES ERJ3GEYJ 680 V (68) | T | 55.7/157.6 |
| R588 | 7030003340 | S.RES ERJ3GEYJ 151 V (150) | T | 58.5/158.9 |
| R589 | 7030003300 | S.RES ERJ3GEYJ 680 V (68) | T | 55.7/158.9 |
| R591 | 7030003320 | S.RES ERJ3GEYJ 101 V (100) | T | 58.2/169.9 |
| R592 | 7030005321 | S.RES ERA3YED 103V (10K) | T | 58.5/167.9 |
| R593 | 7030003480 | S.RES ERJ3GEYJ 222 V (2.2K) | T | 58.5/165.1 |
| R594 | 7030003320 | S.RES ERJ3GEYJ 101 V (100) | B | 61.9/168.1 |
| R595 | 7030003640 | S.RES ERJ3GEYJ 473 V (47K) | B | 55.9/165.3 |
| R596 | 7030003540 | S.RES ERJ3GEYJ 682 V (6.8K) | B | 54.7/168.9 |
| R601 | 7030009851 | S.RES ERA3YED 271V (270) | T | 51.7/118.2 |
| R602 | 7030003470 | S.RES ERJ3GEYJ 182 V (1.8K) | T | 49.5/120.1 |
| R606 | 7030003360 | S.RES ERJ3GEYJ 221 V (220) | T | 45.3/115.6 |
| R607 | 7030003480 | S.RES ERJ3GEYJ 222 V (2.2K) | T | 48.6/115.4 |
| R608 | 7030007230 | S.RES ERA3YED 102V (1K) | T | 49.9/115.4 |
| R651 | 7030007230 | S.RES ERA3YED 102V (1K) | B | 23.5/177.1 |
| R652 | 7030003360 | S.RES ERJ3GEYJ 221 V (220) | T | 13.5/170.8 |
| R653 | 7030007230 | S.RES ERA3YED 102V (1K) | T | 13.5/169.5 |
| R654 | 7030007230 | S.RES ERA3YED 102V (1K) | T | 13.5/168.2 |
| R656 | 7030003800 | S.RES ERJ3GEYJ 105 V (1M) | T | 15.0/161.4 |
| R657 | 7030003320 | S.RES ERJ3GEYJ 101 V (100) | T | 20.2/161.4 |
| R661 | 7030007220 | S.RES ERA3YED 202V (2K) | T | 31.7/162.8 |
| R662 | 7030007220 | S.RES ERA3YED 202V (2K) | T | 31.7/164.1 |
| R663 | 7030007220 | S.RES ERA3YED 202V (2K) | T | 31.7/165.4 |
| R664 | 7030007220 | S.RES ERA3YED 202V (2K) | T | 31.7/166.7 |
| R665 | 7030007220 | S.RES ERA3YED 202V (2K) | T | 31.7/168.0 |
| R666 | 7030007220 | S.RES ERA3YED 202V (2K) | T | 31.7/170.6 |
| R667 | 7030007220 | S.RES ERA3YED 202V (2K) | T | 31.7/171.9 |
| R668 | 7030007220 | S.RES ERA3YED 202V (2K) | T | 31.7/173.2 |
| R669 | 7030007200 | S.RES ERA3YEB 202V (2K) | T | 31.7/174.5 |
| R670 | 7030007200 | S.RES ERA3YEB 202V (2K) | T | 31.7/175.8 |
| R671 | 7030007200 | S.RES ERA3YEB 202V (2K) | T | 31.7/177.1 |
| R673 | 7030007230 | S.RES ERA3YED 102V (1K) | T | 34.3/165.4 |
| R674 | 7030007230 | S.RES ERA3YED 102V (1K) | T | 34.3/166.7 |
| R675 | 7030007230 | S.RES ERA3YED 102V (1K) | T | 34.3/168.0 |
| R676 | 7030007230 | S.RES ERA3YED 102V (1K) | T | 34.3/169.3 |
| R677 | 7030007230 | S.RES ERA3YED 102V (1K) | T | 34.3/170.6 |
| R678 | 7030007230 | S.RES ERA3YED 102V (1K) | T | 34.3/171.9 |
| R679 | 7030007210 | S.RES ERA3YEB 102V (1K) | T | 34.3/173.2 |
| R680 | 7030007210 | S.RES ERA3YEB 102V (1K) | T | 34.3/174.5 |
| R681 | 7030007210 | S.RES ERA3YEB 102V (1K) | T | 34.3/175.8 |
| R683 | 7030003860 | S.RES ERJ3GE JPW V | B | 58.4/167.8 |
| R685 | 7030003460 | S.RES ERJ3GEYJ 152 V (1.5K) | T | 38.4/169.7 |
| R686 | 7030003320 | S.RES ERJ3GEYJ 101 V (100) | T | 40.3/163.4 |
| R687 | 7030003470 | S.RES ERJ3GEYJ 182 V (1.8K) | T | 37.4/165.1 |
| R688 | 7030003480 | S.RES ERJ3GEYJ 222 V (2.2K) | T | 34.3/162.8 |
| R689 | 7030003360 | S.RES ERJ3GEYJ 221 V (220) | T | 33.6/161.5 |
| R690 | 7030009851 | S.RES ERA3YED 271V (270) | T | 46.4/165.3 |
| R691 | 7030003230 | S.RES ERJ3GEYJ 180 V (18) | T | 48.4/164.8 |
| R692 | 7030009851 | S.RES ERA3YED 271V (270) | T | 46.4/166.6 |
| R693 | 7030003360 | S.RES ERJ3GEYJ 221 V (220) | T | 37.1/169.7 |
| R704 | 7030009841 | S.RES ERA3YHD 330V (33) | T | 30.8/113.7 |
| R705 | 7030003600 | S.RES ERJ3GEYJ 223 V (22K) | T | 29.5/113.7 |
| R706 | 7030005321 | S.RES ERA3YED 103V (10K) | T | 28.2/113.7 |
| R707 | 7030009861 | S.RES ERA3YED 471V (470) | T | 30.8/108.1 |
| R708 | 7030003410 | S.RES ERJ3GEYJ 561 V (560) | T | 43.3/118.8 |
| R709 | 7030007860 | S.RES ERJ3GEYJ 8R2V (8.2) | T | 43.3/116.0 |
| R710 | 7030003410 | S.RES ERJ3GEYJ 561 V (560) | T | 43.8/121.1 |
| R711 | 7030003320 | S.RES ERJ3GEYJ 101 V (100) | T | 38.0/154.5 |
| R1000 | 7030003320 | S.RES ERJ3GEYJ 101 V (100) | B | 177.2/11.2 |
| R1003 | 7030010980 | S.RES ERA3YHD 470V (47) | T | 162.0/13.4 |
| R1004 | 7030007230 | S.RES ERA3YED 102V (1K) | B | 166.4/12.9 |
| R1005 | 7030003550 | S.RES ERJ3GEYJ 822 V (8.2K) | T | 144.0/26.1 |
| R1006 | 7030007230 | S.RES ERA3YED 102V (1K) | T | 145.3/26.1 |
| R1007 | 7030004030 | S.RES ERJ3GEYJ 5R6 V (5.6) | B | 153.7/33.7 |
| R1008 | 7030003240 | S.RES ERJ3GEYJ 220 V (22) | T | 144.0/36.4 |
| R1009 | 7030010980 | S.RES ERA3YHD 470V (47) | T | 182.4/29.3 |
| R1010 | 7030010980 | S.RES ERA3YHD 470V (47) | T | 154.5/33.2 |
| R1013 | 7030007230 | S.RES ERA3YED 102V (1K) | B | 172.7/40.8 |
| R1014 | 7030007230 | S.RES ERA3YED 102V (1K) | B | 156.7/40.8 |
| R1015 | 7030003530 | S.RES ERJ3GEYJ 562 V (5.6K) | B | 172.7/45.4 |
| R1016 | 7030003530 | S.RES ERJ3GEYJ 562 V (5.6K) | B | 156.7/45.4 |
| R1017 | 7030003530 | S.RES ERJ3GEYJ 562 V (5.6K) | B | 169.7/12.9 |
| R1020 | 7030003390 | S.RES ERJ3GEYJ 391 V (390) | T | 179.6/18.4 |
| R1021 | 7030003220 | S.RES ERJ3GEYJ 150 V (15) | T | 177.0/19.4 |
| R1022 | 7030003390 | S.RES ERJ3GEYJ 391 V (390) | T | 180.9/19.4 |
| R1023 | 7030010980 | S.RES ERA3YHD 470V (47) | B | 149.4/33.5 |
| R1024 | 7030003200 | S.RES ERJ3GEYJ 100 V (10) | B | 150.2/31.4 |
| R1025 | 7030003300 | S.RES ERJ3GEYJ 680 V (68) | T | 178.3/19.4 |
| R1026 | 7030003480 | S.RES ERJ3GEYJ 222 V (2.2K) | B | 171.2/14.2 |
| R1027 | 7030003200 | S.RES ERJ3GEYJ 100 V (10) | B | 176.5/38.3 |
| R1028 | 7030003200 | S.RES ERJ3GEYJ 100 V (10) | B | 160.5/38.3 |
| R1029 | 7030010980 | S.RES ERA3YHD 470V (47) | B | 178.3/46.2 |
| R1030 | 7030010980 | S.RES ERA3YHD 470V (47) | B | 162.3/46.2 |
| R1051 | 7030003800 | S.RES ERJ3GEYJ 105 V (1M) | T | 178.6/93.1 |
| R1054 | 7030011500 | S.RES ERA3YHD 270V (27) | T | 149.2/83.2 |
| R1055 | 7030000010 | S.RES MCR10EZHJ JPW (000) | T | 162.1/76.6 |
| R1056 | 7030000010 | S.RES MCR10EZHJ JPW (000) | T | 177.5/71.1 |
| R1071 | 7030010980 | S.RES ERA3YHD 470V (47) | B | 165.9/76.5 |
| R1072 | 7030000010 | S.RES MCR10EZHJ JPW (000) | T | 134.0/84.2 |
| R1073 | 7030000010 | S.RES MCR10EZHJ JPW (000) | T | 135.5/85.7 |
| R1101 | 7310004860 | S.TRI EVM-3YSX50 B53 (502) | T | 180.1/90.2 |
| R1102 | 7030005871 | S.RES ERA3YKD 104V (100K) | B | 180.2/100.6 |
| R1103 | 7030007680 | S.RES ERJ8ENF 47R0V (47) | T | 181.7/104.7 |
| R1104 | 7030007680 | S.RES ERJ8ENF 47R0V (47) | T | 173.6/107.2 |
| R1105 | 7030003500 | S.RES ERJ3GEYJ 332 V (3.3K) | T | 176.7/87.7 |
| R1106 | 7030009620 | S.RES ERJ12YJ120U (12) | B | 179.6/117.9 |
| R1107 | 7030010980 | S.RES ERA3YHD 470V (47) | T | 175.6/120.3 |
| R1109 | 7030007180 | S.RES ERJ12YJ150U (15) | B | 176.6/125.7 |
| R1110 | 7030003480 | S.RES ERJ3GEYJ 222 V (2.2K) | B | 168.5/131.7 |
| R1111 | 7030003480 | S.RES ERJ3GEYJ 222 V (2.2K) | T | 166.2/130.4 |
| R1113 | 7030003480 | S.RES ERJ3GEYJ 222 V (2.2K) | T | 166.2/131.7 |

## [RXPLL-B UNIT]

| REF NO. | PARTS NO. | DESCRIPTION | M. | H/V LOCATION |
|---|---|---|---|---|
| R1114 | 7030004040 | S.RES ERJ3GEYJ 4R7 V (4.7) | T | 179.3/125.3 |
| R1115 | 7030006240 | S.RES ERJ12YJ181U (180) | B | 176.6/130.0 |
| R1116 | 7030007230 | S.RES ERA3YED 102V (1K) | T | 175.7/135.3 |
| R1117 | 7030004040 | S.RES ERJ3GEYJ 4R7 V (4.7) | T | 175.7/134.0 |
| R1118 | 7030003480 | S.RES ERJ3GEYJ 222 V (2.2K) | T | 175.4/132.0 |
| R1119 | 7030003470 | S.RES ERJ3GEYJ 182 V (1.8K) | T | 178.0/132.0 |
| R1120 | 7030006070 | S.RES ERJ12YJ101U (100) | B | 177.4/141.0 |
| R1121 | 7030003240 | S.RES ERJ3GEYJ 220 V (22) | T | 178.6/139.6 |
| R1122 | 7030010980 | S.RES ERA3YHD 470V (47) | T | 172.0/131.1 |
| R1123 | 7030003480 | S.RES ERJ3GEYJ 222 V (2.2K) | T | 165.7/137.4 |
| R1124 | 7030003460 | S.RES ERJ3GEYJ 152 V (1.5K) | T | 165.7/140.0 |
| R1125 | 7030003420 | S.RES ERJ3GEYJ 681 V (680) | B | 171.0/142.2 |
| R1126 | 7030003200 | S.RES ERJ3GEYJ 100 V (10) | T | 168.4/142.2 |
| R1127 | 7030010980 | S.RES ERA3YHD 470V (47) | T | 174.6/142.9 |
| R1128 | 7030003470 | S.RES ERJ3GEYJ 182 V (1.8K) | T | 174.7/146.6 |
| R1129 | 7030003470 | S.RES ERJ3GEYJ 182 V (1.8K) | T | 174.7/148.4 |
| R1130 | 7030003480 | S.RES ERJ3GEYJ 222 V (2.2K) | T | 180.6/146.4 |
| R1131 | 7030003640 | S.RES ERJ3GEYJ 473 V (47K) | B | 177.4/90.8 |
| R1132 | 7310004860 | S.TRI EVM-3YSX50 B53 (502) | T | 179.4/84.3 |
| R1133 | 7030003500 | S.RES ERJ3GEYJ 332 V (3.3K) | T | 175.5/82.5 |
| R1134 | 7030003640 | S.RES ERJ3GEYJ 473 V (47K) | T | 175.5/83.8 |
| R1135 | 7030005871 | S.RES ERA3YKD 104V (100K) | T | 182.2/97.9 |
| R1151 | 7030003280 | S.RES ERJ3GEYJ 470 V (47) | T | 134.8/64.0 |
| R1152 | 7030003280 | S.RES ERJ3GEYJ 470 V (47) | B | 117.3/56.3 |
| R1203 | 7030000010 | S.RES MCR10EZHJ JPW (000) | T | 157.5/74.9 |
| R1211 | 7030003860 | S.RES ERJ3GE JPW V | T | 117.6/7.9 |
| R1212 | 7030003860 | S.RES ERJ3GE JPW V | T | 124.9/51.1 |
| R1213 | 7030003200 | S.RES ERJ3GEYJ 100 V (10) | B | 118.9/25.0 |
| R1214 | 7030003200 | S.RES ERJ3GEYJ 100 V (10) | B | 109.1/25.0 |
| R1216 | 7030010980 | S.RES ERA3YHD 470V (47) | B | 120.8/31.7 |
| R1217 | 7030010980 | S.RES ERA3YHD 470V (47) | B | 111.3/31.7 |
| R1220 | 7030010980 | S.RES ERA3YHD 470V (47) | T | 118.8/17.3 |
| R1221 | 7030007230 | S.RES ERA3YED 102V (1K) | T | 116.4/39.9 |
| R1222 | 7030003530 | S.RES ERJ3GEYJ 562 V (5.6K) | T | 116.4/38.6 |
| R1223 | 7030010980 | S.RES ERA3YHD 470V (47) | T | 109.3/17.1 |
| R1224 | 7030007230 | S.RES ERA3YED 102V (1K) | T | 106.6/39.9 |
| R1225 | 7030003530 | S.RES ERJ3GEYJ 562 V (5.6K) | T | 106.6/38.6 |
| R1226 | 7030003410 | S.RES ERJ3GEYJ 561 V (560) | T | 158.9/92.9 |
| R1227 | 7030003410 | S.RES ERJ3GEYJ 561 V (560) | T | 154.0/92.9 |
| R1228 | 7310004860 | S.TRI EVM-3YSX50 B53 (502) | T | 156.5/92.9 |
| R1229 | 7030003480 | S.RES ERJ3GEYJ 222 V (2.2K) | B | 156.2/117.5 |
| R1230 | 7030003480 | S.RES ERJ3GEYJ 222 V (2.2K) | B | 156.2/119.3 |
| R1231 | 7030003480 | S.RES ERJ3GEYJ 222 V (2.2K) | B | 156.2/121.1 |
| R1232 | 7030003600 | S.RES ERJ3GEYJ 223 V (22K) | T | 156.3/97.5 |
| R1233 | 7030010980 | S.RES ERA3YHD 470V (47) | B | 152.5/109.5 |
| R1301 | 7030010980 | S.RES ERA3YHD 470V (47) | B | 155.8/97.5 |
| R1302 | 7030003860 | S.RES ERJ3GE JPW V | T | 159.3/116.8 |
| R1304 | 7030003620 | S.RES ERJ3GEYJ 333 V (33K) | T | 156.5/123.2 |
| R1306 | 7030006230 | S.RES ERJ12YJ151U (150) | B | 153.8/124.8 |
| R1307 | 7030003300 | S.RES ERJ3GEYJ 680 V (68) | T | 156.5/128.4 |
| R1311 | 7030000010 | S.RES MCR10EZHJ JPW (000) | T | 140.3/98.9 |
| R1312 | 7030000010 | S.RES MCR10EZHJ JPW (000) | T | 143.2/104.1 |
| R1313 | 7030000010 | S.RES MCR10EZHJ JPW (000) | T | 143.2/101.6 |
| R1357 | 7030007230 | S.RES ERA3YED 102V (1K) | B | 140.7/70.5 |
| R1358 | 7030003530 | S.RES ERJ3GEYJ 562 V (5.6K) | B | 142.8/70.5 |
| R1359 | 7030010980 | S.RES ERA3YHD 470V (47) | T | 139.5/64.7 |
| R1360 | 7030007230 | S.RES ERA3YED 102V (1K) | B | 146.4/67.2 |
| R1361 | 7030003380 | S.RES ERJ3GEYJ 331 V (330) | T | 139.3/68.8 |
| R1362 | 7030005871 | S.RES ERA3YKD 104V (100K) | B | 144.6/70.5 |
| R1401 | 7030003200 | S.RES ERJ3GEYJ 100 V (10) | T | 131.5/103.4 |
| R1402 | 7030003300 | S.RES ERJ3GEYJ 680 V (68) | T | 126.4/111.0 |
| R1403 | 7030007230 | S.RES ERA3YED 102V (1K) | T | 132.0/107.7 |
| R1404 | 7030009861 | S.RES ERA3YED 471V (470) | T | 134.7/104.3 |
| R1405 | 7030003340 | S.RES ERJ3GEYJ 151 V (150) | T | 137.3/104.3 |
| R1406 | 7030009591 | S.RES ERA3YED 472V (4.7K) | T | 135.2/106.3 |
| R1407 | 7030003550 | S.RES ERJ3GEYJ 822 V (8.2K) | B | 135.5/104.4 |
| R1408 | 7030003200 | S.RES ERJ3GEYJ 100 V (10) | T | 121.0/109.0 |
| R1409 | 7030009591 | S.RES ERA3YED 472V (4.7K) | T | 120.6/114.9 |
| R1410 | 7030006091 | S.RES ERA3YED 822V (8.2K) | B | 124.2/114.4 |
| R1411 | 7030005871 | S.RES ERA3YKD 104V (100K) | T | 123.3/116.2 |
| R1412 | 7030003200 | S.RES ERJ3GEYJ 100 V (10) | T | 126.4/112.3 |
| R1413 | 7030003200 | S.RES ERJ3GEYJ 100 V (10) | T | 126.4/113.6 |
| R1414 | 7030005871 | S.RES ERA3YKD 104V (100K) | B | 120.9/114.4 |
| R1415 | 7030010980 | S.RES ERA3YHD 470V (47) | T | 127.1/114.9 |
| R1416 | 7030003320 | S.RES ERJ3GEYJ 101 V (100) | B | 139.7/123.0 |
| R1417 | 7030000010 | S.RES MCR10EZHJ JPW (000) | B | 130.1/124.5 |
| R1418 | 7030000010 | S.RES MCR10EZHJ JPW (000) | B | 130.1/122.6 |
| R1419 | 7030003860 | S.RES ERJ3GE JPW V | B | 129.5/114.9 |
| R1501 | 7030010980 | S.RES ERA3YHD 470V (47) | T | 126.5/125.3 |
| R1502 | 7030009841 | S.RES ERA3YHD 330V (33) | T | 133.1/131.1 |
| R1503 | 7030009851 | S.RES ERA3YED 271V (270) | T | 130.0/146.3 |
| R1504 | 7030011050 | S.RES ERA3YHD 100V (10) | T | 131.3/143.5 |
| R1505 | 7030006091 | S.RES ERA3YED 822V (8.2K) | B | 137.7/140.3 |
| R1506 | 7030007230 | S.RES ERA3YED 102V (1K) | B | 137.7/147.0 |
| R1507 | 7030007230 | S.RES ERA3YED 102V (1K) | T | 132.6/146.3 |
| R1508 | 7030007230 | S.RES ERA3YED 102V (1K) | T | 133.9/146.3 |
| R1509 | 7030007230 | S.RES ERA3YED 102V (1K) | T | 139.1/158.9 |
| R1510 | 7030005321 | S.RES ERA3YED 103V (10K) | T | 139.1/157.6 |
| R1511 | 7030009861 | S.RES ERA3YED 471V (470) | T | 136.5/157.6 |
| R1512 | 7030003380 | S.RES ERJ3GEYJ 331 V (330) | T | 129.6/151.6 |
| R1513 | 7030003380 | S.RES ERJ3GEYJ 331 V (330) | T | 129.6/155.5 |
| R1514 | 7030005321 | S.RES ERA3YED 103V (10K) | T | 129.6/160.8 |
| R1515 | 7030005321 | S.RES ERA3YED 103V (10K) | T | 133.5/160.8 |
| R1516 | 7310005380 | S.TRI EVM3VB13 1K (1K) | T | 119.2/157.7 |
| R1517 | 7030005321 | S.RES ERA3YED 103V (10K) | T | 115.3/158.0 |
| R1518 | 7030005321 | S.RES ERA3YED 103V (10K) | T | 134.8/160.8 |
| R1519 | 7030005321 | S.RES ERA3YED 103V (10K) | T | 131.7/171.7 |
| R1520 | 7030005321 | S.RES ERA3YED 103V (10K) | T | 136.1/160.8 |
| R1521 | 7030010980 | S.RES ERA3YHD 470V (47) | T | 126.6/133.0 |
| R1522 | 7030009841 | S.RES ERA3YHD 330V (33) | T | 126.1/141.2 |
| R1523 | 7030009851 | S.RES ERA3YED 271V (270) | T | 123.7/146.3 |
| R1524 | 7030011050 | S.RES ERA3YHD 100V (10) | T | 122.4/143.5 |
| R1525 | 7030007230 | S.RES ERA3YED 102V (1K) | B | 128.8/147.0 |
| R1526 | 7030003460 | S.RES ERJ3GEYJ 152 V (1.5K) | B | 137.7/142.1 |
| R1527 | 7030007230 | S.RES ERA3YED 102V (1K) | T | 119.8/146.3 |

Eqv.= This component is equivalent to the REF No. component listed above, and may be substituted on parts orders and repairs.

M.=Mounted side (T: Mounted on the Top side, B: Mounted on the Bottom side)
S.=Surface mount

## [RXPLL-B UNIT]

| REF NO. | PARTS NO. | DESCRIPTION | M. | H/V LOCATION |
|---|---|---|---|---|
| R1528 | 7030007230 | S.RES ERA3YED 102V (1K) | T | 121.1/146.3 |
| R1529 | 7030007230 | S.RES ERA3YED 102V (1K) | T | 115.3/152.3 |
| R1530 | 7030003380 | S.RES ERJ3GEYJ 331 V (330) | T | 128.0/151.6 |
| R1531 | 7030003380 | S.RES ERJ3GEYJ 331 V (330) | T | 128.0/155.5 |
| R1532 | 7030005321 | S.RES ERA3YED 103V (10K) | T | 124.1/160.8 |
| R1533 | 7030005321 | S.RES ERA3YED 103V (10K) | T | 128.0/160.8 |
| R1534 | 7030005321 | S.RES ERA3YED 103V (10K) | T | 122.8/160.8 |
| R1535 | 7030005321 | S.RES ERA3YED 103V (10K) | T | 121.5/160.8 |
| R1536 | 7030005321 | S.RES ERA3YED 103V (10K) | T | 129.0/171.7 |
| R1537 | 7030003320 | S.RES ERJ3GEYJ 101 V (100) | T | 115.5/164.5 |
| R1538 | 7030003320 | S.RES ERJ3GEYJ 101 V (100) | T | 107.1/170.1 |
| R1539 | 7030008061 | S.RES ERA3YED 222V (2.2K) | B | 131.8/176.4 |
| R1540 | 7030010390 | S.RES ERA3YED 821V (820) | B | 128.7/177.1 |
| R1541 | 7030003320 | S.RES ERJ3GEYJ 101 V (100) | T | 107.1/178.8 |
| R1542 | 7030003320 | S.RES ERJ3GEYJ 101 V (100) | T | 115.5/173.2 |
| R1543 | 7030009691 | S.RES ERA3YED 101V (100) | B | 130.6/179.0 |
| R1651 | 7030003380 | S.RES ERJ3GEYJ 331 V (330) | B | 101.0/144.8 |
| R1652 | 7030003220 | S.RES ERJ3GEYJ 150 V (15) | B | 102.7/144.8 |
| R1653 | 7030003380 | S.RES ERJ3GEYJ 331 V (330) | B | 102.0/143.0 |
| R1654 | 7030010980 | S.RES ERA3YHD 470V (47) | B | 105.5/142.3 |
| R1655 | 7030009861 | S.RES ERA3YED 471V (470) | B | 108.9/140.1 |
| R1656 | 7030003630 | S.RES ERJ3GEYJ 393 V (39K) | B | 108.3/142.3 |
| R1657 | 7030005871 | S.RES ERA3YKD 104V (100K) | T | 108.0/133.2 |
| R1658 | 7030003320 | S.RES ERJ3GEYJ 101 V (100) | T | 110.6/133.2 |
| R1659 | 7030009691 | S.RES ERA3YED 101V (100) | T | 115.9/125.0 |
| R1660 | 7030009691 | S.RES ERA3YED 101V (100) | T | 115.9/128.8 |
| R1661 | 7030005321 | S.RES ERA3YED 103V (10K) | T | 135.1/175.4 |
| R1662 | 7030005321 | S.RES ERA3YED 103V (10K) | T | 135.2/172.8 |
| R1663 | 7030005321 | S.RES ERA3YED 103V (10K) | T | 144.3/175.4 |
| R1664 | 7030005321 | S.RES ERA3YED 103V (10K) | T | 139.9/172.1 |
| R1665 | 7030003320 | S.RES ERJ3GEYJ 101 V (100) | T | 109.3/133.2 |
| R1667 | 7030003360 | S.RES ERJ3GEYJ 221 V (220) | T | 139.2/170.2 |
| R1668 | 7030003360 | S.RES ERJ3GEYJ 221 V (220) | T | 141.8/170.2 |
| R1670 | 7030003800 | S.RES ERJ3GEYJ 105 V (1M) | T | 140.2/164.1 |
| R1673 | 7030007230 | S.RES ERA3YED 102V (1K) | B | 146.0/174.5 |
| R1674 | 7030009851 | S.RES ERA3YED 271V (270) | B | 145.1/177.1 |
| R1675 | 7030009591 | S.RES ERA3YED 472V (4.7K) | T | 136.6/170.2 |
| R1677 | 7030009591 | S.RES ERA3YED 472V (4.7K) | T | 143.1/170.2 |
| R1701 | 7030003360 | S.RES ERJ3GEYJ 221 V (220) | T | 162.4/147.4 |
| R1703 | 7030003360 | S.RES ERJ3GEYJ 221 V (220) | T | 159.8/147.4 |
| R1704 | 7030003360 | S.RES ERJ3GEYJ 221 V (220) | T | 158.5/147.4 |
| R1706 | 7030003360 | S.RES ERJ3GEYJ 221 V (220) | T | 155.9/147.4 |
| R1707 | 7030003360 | S.RES ERJ3GEYJ 221 V (220) | T | 154.6/147.4 |
| R1708 | 7030003360 | S.RES ERJ3GEYJ 221 V (220) | T | 153.3/147.4 |
| R1709 | 7030003480 | S.RES ERJ3GEYJ 222 V (2.2K) | T | 149.7/159.3 |
| R1710 | 7030003480 | S.RES ERJ3GEYJ 222 V (2.2K) | T | 148.4/159.3 |
| R1711 | 7030003540 | S.RES ERJ3GEYJ 682 V (6.8K) | T | 147.1/159.3 |
| R1712 | 7030003540 | S.RES ERJ3GEYJ 682 V (6.8K) | T | 145.8/159.3 |
| R1713 | 7030003660 | S.RES ERJ3GEYJ 683 V (68K) | T | 145.8/157.2 |
| R1714 | 7030003660 | S.RES ERJ3GEYJ 683 V (68K) | T | 145.8/155.9 |
| R1715 | 7030003540 | S.RES ERJ3GEYJ 682 V (6.8K) | T | 143.9/164.9 |
| R1716 | 7030007230 | S.RES ERA3YED 102V (1K) | T | 164.2/164.8 |
| R1717 | 7030007230 | S.RES ERA3YED 102V (1K) | T | 164.2/163.5 |
| R1718 | 7030007230 | S.RES ERA3YED 102V (1K) | T | 164.2/162.2 |
| R1719 | 7030003660 | S.RES ERJ3GEYJ 683 V (68K) | T | 144.4/166.8 |
| | | | | |
| C1 | 4030011600 | S.CER C1608 JB 1E 104K-T | T | 10.8/18.2 |
| C2 | 4030006880 | S.CER C1608 JB 1H 472K-T | T | 25.7/29.5 |
| C14 | 4030006880 | S.CER C1608 JB 1H 472K-T | T | 37.7/12.5 |
| C15 | 4030006880 | S.CER C1608 JB 1H 472K-T | T | 31.2/15.4 |
| C16 | 4030006880 | S.CER C1608 JB 1H 472K-T | T | 35.1/15.4 |
| C17 | 4030006880 | S.CER C1608 JB 1H 472K-T | T | 13.8/12.6 |
| C18 | 4030006880 | S.CER C1608 JB 1H 472K-T | T | 16.8/12.6 |
| C19 | 4030006880 | S.CER C1608 JB 1H 472K-T | T | 29.5/12.6 |
| C20 | 4030006880 | S.CER C1608 JB 1H 472K-T | T | 87.4/127.9 |
| C21 | 4030006880 | S.CER C1608 JB 1H 472K-T | T | 88.7/127.9 |
| C22 | 4030006880 | S.CER C1608 JB 1H 472K-T | T | 90.0/127.9 |
| C30 | 4030011600 | S.CER C1608 JB 1E 104K-T | T | 19.1/112.4 |
| C31 | 4030011600 | S.CER C1608 JB 1E 104K-T | T | 20.4/113.7 |
| C32 | 4030011600 | S.CER C1608 JB 1E 104K-T | T | 24.3/111.1 |
| C51 | 4510008520 | S.ELE EEE1CA470SP | T | 84.0/20.3 |
| C52 | 4030011600 | S.CER C1608 JB 1E 104K-T | T | 78.9/23.7 |
| C53 | 4030011600 | S.CER C1608 JB 1E 104K-T | T | 75.1/23.7 |
| C54 | 4510008500 | S.ELE EEE1CA101WP | T | 70.0/20.3 |
| C61 | 4510008520 | S.ELE EEE1CA470SP | T | 62.9/20.3 |
| C62 | 4030011600 | S.CER C1608 JB 1E 104K-T | B | 58.2/19.9 |
| C63 | 4030011600 | S.CER C1608 JB 1E 104K-T | B | 54.8/19.9 |
| C64 | 4510008500 | S.ELE EEE1CA101WP | T | 50.1/20.3 |
| C101 | 4030006880 | S.CER C1608 JB 1H 472K-T | T | 39.7/80.7 |
| C102 | 4030011600 | S.CER C1608 JB 1E 104K-T | T | 41.8/79.9 |
| C103 | 4510008540 | S.ELE EEE1CA100SR | T | 40.2/76.8 |
| C104 | 4030011600 | S.CER C1608 JB 1E 104K-T | T | 21.4/100.2 |
| C105 | 4030011600 | S.CER C1608 JB 1E 104K-T | T | 21.4/88.2 |
| C106 | 4030011600 | S.CER C1608 JB 1E 104K-T | T | 21.4/84.4 |
| C107 | 4030011600 | S.CER C1608 JB 1E 104K-T | T | 24.4/79.8 |
| C108 | 4030011600 | S.CER C1608 JB 1E 104K-T | T | 27.0/79.8 |
| C109 | 4030011600 | S.CER C1608 JB 1E 104K-T | T | 30.8/79.8 |
| C110 | 4030011600 | S.CER C1608 JB 1E 104K-T | T | 36.8/79.8 |
| C111 | 4030011600 | S.CER C1608 JB 1E 104K-T | T | 41.2/88.5 |
| C112 | 4030011600 | S.CER C1608 JB 1E 104K-T | T | 41.3/82.6 |
| C114 | 4030011600 | S.CER C1608 JB 1E 104K-T | T | 39.6/98.5 |
| C115 | 4030011600 | S.CER C1608 JB 1E 104K-T | T | 38.2/98.5 |
| C116 | 4030011600 | S.CER C1608 JB 1E 104K-T | T | 35.3/99.7 |
| C117 | 4030011600 | S.CER C1608 JB 1E 104K-T | T | 23.3/98.8 |
| C118 | 4030011600 | S.CER C1608 JB 1E 104K-T | T | 42.6/82.6 |
| C120 | 4030006880 | S.CER C1608 JB 1H 472K-T | T | 36.8/101.5 |
| C121 | 4030011600 | S.CER C1608 JB 1E 104K-T | T | 39.6/101.5 |
| C125 | 4030011600 | S.CER C1608 JB 1E 104K-T | T | 14.6/83.1 |
| C129 | 4030011600 | S.CER C1608 JB 1E 104K-T | T | 33.4/79.8 |
| C130 | 4030017810 | S.CER C1608 CH 1H 102J-T | B | 47.6/106.6 |
| C131 | 4030011600 | S.CER C1608 JB 1E 104K-T | T | 30.4/73.2 |
| C132 | 4030011600 | S.CER C1608 JB 1E 104K-T | T | 35.5/73.2 |
| C133 | 4030006880 | S.CER C1608 JB 1H 472K-T | B | 43.5/98.6 |
| C134 | 4030006880 | S.CER C1608 JB 1H 472K-T | B | 43.5/96.8 |

## [RXPLL-B UNIT]

| REF NO. | PARTS NO. | DESCRIPTION | M. | H/V LOCATION |
|---|---|---|---|---|
| C135 | 4030006880 | S.CER C1608 JB 1H 472K-T | T | 46.1/95.5 |
| C136 | 4030006880 | S.CER C1608 JB 1H 472K-T | T | 46.1/94.2 |
| C137 | 4030006880 | S.CER C1608 JB 1H 472K-T | T | 46.1/90.3 |
| C138 | 4030006880 | S.CER C1608 JB 1H 472K-T | T | 46.2/87.7 |
| C139 | 4030006880 | S.CER C1608 JB 1H 472K-T | B | 43.5/100.4 |
| C141 | 4030004740 | S.CER C2012 JB 1H 472K-T | B | 34.4/85.2 |
| C142 | 4550007470 | S.TAN F931A107MNMBMA | B | 19.5/87.5 |
| C150 | 4340000050 | S.MYL ECH-U 1C472JB5 | T | 16.4/64.6 |
| C151 | 4550007520 | S.TAN F931A106MAABMA | B | 38.6/92.1 |
| C152 | 4030007070 | S.CER C1608 CH 1H 330J-T | T | 19.2/59.9 |
| C153 | 4030009910 | S.CER C1608 CH 1H 040B-T | T | 21.3/55.4 |
| C154 | 4610001850 | S.TRI TZB4R200AB10R00 (TZBX4R200BA110) | T | 17.6/55.1 |
| C155 | 4030016550 | S.CER CM105 CH 151G 50AT | T | 24.1/55.4 |
| C156 | 4030016550 | S.CER CM105 CH 151G 50AT | T | 26.9/55.4 |
| C157 | 4030016550 | S.CER CM105 CH 151G 50AT | T | 26.9/56.7 |
| C158 | 4030006880 | S.CER C1608 JB 1H 472K-T | T | 23.3/53.1 |
| C159 | 4030006880 | S.CER C1608 JB 1H 472K-T | B | 23.0/51.9 |
| C161 | 4510008540 | S.ELE EEE1CA100SR | T | 31.3/61.0 |
| C162 | 4030009920 | S.CER C1608 CH 1H 050B-T | B | 33.6/53.0 |
| C163 | 4030011600 | S.CER C1608 JB 1E 104K-T | B | 36.9/59.6 |
| C164 | 4030006880 | S.CER C1608 JB 1H 472K-T | B | 30.3/54.8 |
| C165 | 4030006880 | S.CER C1608 JB 1H 472K-T | B | 30.8/74.0 |
| C166 | 4030011600 | S.CER C1608 JB 1E 104K-T | B | 34.9/78.3 |
| C167 | 4030006880 | S.CER C1608 JB 1H 472K-T | B | 37.4/74.0 |
| C201 | 4030011340 | S.CER C1608 CH 1H 471J-T | T | 33.8/40.5 |
| C202 | 4510009280 | S.ELE EEE1EA4R7SR | T | 26.5/44.0 |
| C203 | 4030006900 | S.CER C1608 JB 1H 103K-T | T | 32.5/38.3 |
| C204 | 4030006880 | S.CER C1608 JB 1H 472K-T | T | 25.4/35.3 |
| C205 | 4030006880 | S.CER C1608 JB 1H 472K-T | T | 25.4/34.0 |
| C206 | 4030006880 | S.CER C1608 JB 1H 472K-T | T | 31.1/43.0 |
| C207 | 4030007030 | S.CER C1608 CH 1H 150J-T | B | 46.8/32.4 |
| C208 | 4030007030 | S.CER C1608 CH 1H 150J-T | T | 32.5/41.0 |
| C209 | 4030011340 | S.CER C1608 CH 1H 471J-T | T | 44.1/26.1 |
| C210 | 4550008150 | S.TAN F921V224MAA | T | 46.2/26.7 |
| Eqv. | 4550000550 | S.TAN TEESVA 1V 224M8R | | |
| C211 | 4550007300 | S.TAN F931A335MAABMA | B | 46.1/41.6 |
| C219 | 4030006880 | S.CER C1608 JB 1H 472K-T | T | 33.8/37.8 |
| C220 | 4030007130 | S.CER C1608 CH 1H 101J-T | T | 54.7/37.6 |
| C221 | 4030009910 | S.CER C1608 CH 1H 040B-T | T | 54.7/32.0 |
| C222 | 4610001860 | S.TRI TZB4Z060AB10R00 (TZBX4Z060BA110) | T | 68.1/32.6 |
| C223 | 4030007080 | S.CER C1608 CH 1H 390J-T | T | 73.2/36.3 |
| C224 | 4030007010 | S.CER C1608 CH 1H 100D-T | T | 73.2/38.9 |
| C225 | 4030007050 | S.CER C1608 CH 1H 220J-T | T | 73.6/30.9 |
| C226 | 4030006880 | S.CER C1608 JB 1H 472K-T | T | 71.0/30.9 |
| C227 | 4030009920 | S.CER C1608 CH 1H 050B-T | T | 75.1/32.6 |
| C228 | 4510008540 | S.ELE EEE1CA100SR | T | 68.8/37.8 |
| C229 | 4030009530 | S.CER C1608 CH 1H 030B-T | T | 77.8/32.6 |
| C230 | 4030007100 | S.CER C1608 CH 1H 560J-T | T | 54.7/50.0 |
| C231 | 4030009520 | S.CER C1608 CH 1H 020B-T | T | 54.7/44.6 |
| C232 | 4610001860 | S.TRI TZB4Z060AB10R00 (TZBX4Z060BA110) | T | 68.1/45.1 |
| C233 | 4030007070 | S.CER C1608 CH 1H 330J-T | T | 73.2/48.8 |
| C234 | 4030009920 | S.CER C1608 CH 1H 050B-T | T | 73.2/51.4 |
| C235 | 4030007020 | S.CER C1608 CH 1H 120J-T | T | 73.6/43.3 |
| C236 | 4030006880 | S.CER C1608 JB 1H 472K-T | T | 71.0/43.3 |
| C237 | 4030009910 | S.CER C1608 CH 1H 040B-T | T | 75.1/45.0 |
| C238 | 4510008540 | S.ELE EEE1CA100SR | T | 68.8/50.3 |
| C239 | 4030009910 | S.CER C1608 CH 1H 040B-T | T | 77.8/45.0 |
| C240 | 4030007080 | S.CER C1608 CH 1H 390J-T | T | 54.7/62.5 |
| C241 | 4030009510 | S.CER C1608 CH 1H 010B-T | T | 54.7/57.1 |
| C242 | 4610001860 | S.TRI TZB4Z060AB10R00 (TZBX4Z060BA110) | T | 68.1/57.6 |
| C243 | 4030007060 | S.CER C1608 CH 1H 270J-T | T | 73.2/61.3 |
| C244 | 4030009910 | S.CER C1608 CH 1H 040B-T | T | 73.2/63.9 |
| C245 | 4030009920 | S.CER C1608 CH 1H 050B-T | T | 73.6/55.8 |
| C246 | 4030006880 | S.CER C1608 JB 1H 472K-T | T | 71.0/55.9 |
| C247 | 4030009530 | S.CER C1608 CH 1H 030B-T | T | 75.1/57.5 |
| C248 | 4510008540 | S.ELE EEE1CA100SR | T | 68.8/62.9 |
| C250 | 4030007100 | S.CER C1608 CH 1H 560J-T | T | 54.7/75.0 |
| C251 | 4030009540 | S.CER C1608 CH 1H 1R5B-T | T | 54.7/69.6 |
| C252 | 4610001810 | S.TRI TZB4Z030AB10R00 (TZBX4Z030BA110) | T | 68.1/70.1 |
| C253 | 4030007080 | S.CER C1608 CH 1H 390J-T | T | 73.2/73.8 |
| C254 | 4030009530 | S.CER C1608 CH 1H 030B-T | T | 73.2/76.4 |
| C255 | 4030006990 | S.CER C1608 CH 1H 080D-T | T | 73.6/68.4 |
| C256 | 4030006880 | S.CER C1608 JB 1H 472K-T | T | 71.0/68.4 |
| C257 | 4030007010 | S.CER C1608 CH 1H 100D-T | T | 75.1/70.0 |
| C258 | 4510008540 | S.ELE EEE1CA100SR | T | 68.8/75.4 |
| C260 | 4030007110 | S.CER C1608 CH 1H 680J-T | T | 54.7/87.5 |
| C262 | 4610001810 | S.TRI TZB4Z030AB10R00 (TZBX4Z030BA110) | T | 68.1/82.6 |
| C263 | 4030007080 | S.CER C1608 CH 1H 390J-T | T | 73.2/86.3 |
| C264 | 4030009530 | S.CER C1608 CH 1H 030B-T | T | 73.2/88.9 |
| C265 | 4030011770 | S.CER C1608 CH 1H 060B-T | T | 73.6/80.9 |
| C266 | 4030006880 | S.CER C1608 JB 1H 472K-T | T | 71.0/80.9 |
| C267 | 4030007010 | S.CER C1608 CH 1H 100D-T | T | 75.1/82.5 |
| C268 | 4510008540 | S.ELE EEE1CA100SR | T | 68.8/87.9 |
| C272 | 4610001860 | S.TRI TZB4Z060AB10R00 (TZBX4Z060BA110) | T | 68.1/95.1 |
| C273 | 4030007050 | S.CER C1608 CH 1H 220J-T | T | 73.2/98.2 |
| C274 | 4030009530 | S.CER C1608 CH 1H 030B-T | T | 73.2/100.8 |
| C275 | 4030009920 | S.CER C1608 CH 1H 050B-T | T | 73.6/92.8 |
| C276 | 4030006880 | S.CER C1608 JB 1H 472K-T | T | 71.0/92.8 |
| C277 | 4030007010 | S.CER C1608 CH 1H 100D-T | T | 75.1/95.0 |
| C278 | 4510008540 | S.ELE EEE1CA100SR | T | 68.8/100.4 |
| C283 | 4030017810 | S.CER C1608 CH 1H 102J-T | T | 82.1/36.3 |
| C284 | 4030006880 | S.CER C1608 JB 1H 472K-T | T | 84.5/34.3 |
| C285 | 4030017810 | S.CER C1608 CH 1H 102J-T | T | 82.1/48.8 |
| C286 | 4030006880 | S.CER C1608 JB 1H 472K-T | T | 84.5/46.9 |
| C287 | 4030017810 | S.CER C1608 CH 1H 102J-T | T | 82.1/61.3 |
| C288 | 4030006880 | S.CER C1608 JB 1H 472K-T | T | 83.9/57.5 |
| C289 | 4030017810 | S.CER C1608 CH 1H 102J-T | T | 82.1/73.8 |
| C290 | 4030006880 | S.CER C1608 JB 1H 472K-T | T | 84.3/70.5 |

Eqv.= This component is equivalent to the REF No. component listed above, and may be substituted on parts orders and repairs.

M.=Mounted side (T: Mounted on the Top side, B: Mounted on the Bottom side)
S.=Surface mount

## [RXPLL-B UNIT]

| REF NO. | PARTS NO. | DESCRIPTION | M. | H/V LOCATION |
|---|---|---|---|---|
| C291 | 4030017810 | S.CER C1608 CH 1H 102J-T | T | 82.1/86.3 |
| C292 | 4030006880 | S.CER C1608 JB 1H 472K-T | T | 84.5/84.4 |
| C293 | 4030017810 | S.CER C1608 CH 1H 102J-T | T | 82.2/98.8 |
| C294 | 4030006880 | S.CER C1608 JB 1H 472K-T | T | 83.2/94.0 |
| C297 | 4030009920 | S.CER C1608 CH 1H 050B-T | T | 52.7/59.4 |
| C299 | 4030007050 | S.CER C1608 CH 1H 220J-T | T | 52.7/84.4 |
| C301 | 4030006880 | S.CER C1608 JB 1H 472K-T | T | 89.3/30.6 |
| C302 | 4030006880 | S.CER C1608 JB 1H 472K-T | T | 94.9/28.0 |
| C303 | 4030006880 | S.CER C1608 JB 1H 472K-T | B | 92.6/39.8 |
| C304 | 4030006880 | S.CER C1608 JB 1H 472K-T | B | 92.6/45.2 |
| C305 | 4030006880 | S.CER C1608 JB 1H 472K-T | B | 89.1/48.8 |
| C306 | 4030006880 | S.CER C1608 JB 1H 472K-T | B | 89.1/50.6 |
| C309 | 4030017810 | S.CER C1608 CH 1H 102J-T | T | 94.9/42.7 |
| C310 | 4030011600 | S.CER C1608 JB 1E 104K-T | T | 92.9/42.2 |
| C311 | 4510008520 | S.ELE EEE1CA470SP | T | 93.4/47.4 |
| C312 | 4030006880 | S.CER C1608 JB 1H 472K-T | B | 89.0/27.4 |
| C313 | 4030006880 | S.CER C1608 JB 1H 472K-T | B | 93.8/23.1 |
| C331 | 4030007110 | S.CER C1608 CH 1H 680J-T | T | 89.3/32.2 |
| C332 | 4030007160 | S.CER C1608 CH 1H 181J-T | T | 92.1/33.5 |
| C333 | 4030007110 | S.CER C1608 CH 1H 680J-T | T | 89.3/33.5 |
| C334 | 4030007050 | S.CER C1608 CH 1H 220J-T | T | 94.9/36.0 |
| C335 | 4030006980 | S.CER C1608 CH 1H 070D-T | T | 94.9/37.4 |
| C336 | 4030007030 | S.CER C1608 CH 1H 150J-T | T | 92.1/38.8 |
| C337 | 4030007050 | S.CER C1608 CH 1H 220J-T | T | 94.9/38.8 |
| C341 | 4030006880 | S.CER C1608 JB 1H 472K-T | T | 94.9/40.1 |
| C342 | 4030006880 | S.CER C1608 JB 1H 472K-T | T | 86.5/33.5 |
| C344 | 4030011600 | S.CER C1608 JB 1E 104K-T | T | 94.9/41.4 |
| C351 | 4030017810 | S.CER C1608 CH 1H 102J-T | T | 94.9/61.6 |
| C352 | 4030011600 | S.CER C1608 JB 1E 104K-T | T | 94.9/62.9 |
| C353 | 4510008520 | S.ELE EEE1CA470SP | T | 93.4/67.1 |
| C354 | 4030006880 | S.CER C1608 JB 1H 472K-T | T | 89.3/51.7 |
| C355 | 4030006880 | S.CER C1608 JB 1H 472K-T | T | 94.9/55.1 |
| C356 | 4030006880 | S.CER C1608 JB 1H 472K-T | T | 89.3/58.4 |
| C357 | 4030006880 | S.CER C1608 JB 1H 472K-T | T | 94.9/57.7 |
| C358 | 4030006880 | S.CER C1608 JB 1H 472K-T | B | 89.2/60.3 |
| C359 | 4030006880 | S.CER C1608 JB 1H 472K-T | B | 92.6/62.1 |
| C360 | 4030006880 | S.CER C1608 JB 1H 472K-T | B | 89.9/66.9 |
| C361 | 4030006880 | S.CER C1608 JB 1H 472K-T | T | 89.4/83.5 |
| C363 | 4030006880 | S.CER C1608 JB 1H 472K-T | T | 86.1/60.9 |
| C364 | 4030017810 | S.CER C1608 CH 1H 102J-T | T | 86.7/52.3 |
| C365 | 4030006880 | S.CER C1608 JB 1H 472K-T | T | 90.3/59.9 |
| C421 | 4030006880 | S.CER C1608 JB 1H 472K-T | T | 94.1/88.5 |
| C423 | 4030006880 | S.CER C1608 JB 1H 472K-T | T | 94.1/93.3 |
| C426 | 4030006880 | S.CER C1608 JB 1H 472K-T | B | 94.6/87.3 |
| C427 | 4030006880 | S.CER C1608 JB 1H 472K-T | T | 92.1/86.6 |
| C441 | 4030007040 | S.CER C1608 CH 1H 180J-T | T | 94.9/71.3 |
| C442 | 4030007040 | S.CER C1608 CH 1H 180J-T | T | 94.9/72.6 |
| C443 | 4030007020 | S.CER C1608 CH 1H 120J-T | T | 92.1/74.3 |
| C444 | 4030007080 | S.CER C1608 CH 1H 390J-T | T | 94.9/73.9 |
| C445 | 4030011770 | S.CER C1608 CH 1H 060B-T | T | 94.9/75.2 |
| C446 | 4030007060 | S.CER C1608 CH 1H 270J-T | T | 94.9/79.1 |
| C447 | 4030007110 | S.CER C1608 CH 1H 680J-T | T | 92.8/79.0 |
| C448 | 4030006880 | S.CER C1608 JB 1H 472K-T | T | 94.9/76.5 |
| C449 | 4030006880 | S.CER C1608 JB 1H 472K-T | T | 88.2/69.1 |
| C451 | 4030007110 | S.CER C1608 CH 1H 680J-T | T | 92.0/82.2 |
| C452 | 4030007160 | S.CER C1608 CH 1H 181J-T | T | 92.0/80.9 |
| C453 | 4030011600 | S.CER C1608 JB 1E 104K-T | T | 94.9/77.8 |
| C501 | 4030006880 | S.CER C1608 JB 1H 472K-T | T | 38.9/131.2 |
| C502 | 4030011600 | S.CER C1608 JB 1E 104K-T | T | 38.9/129.9 |
| C503 | 4510008540 | S.ELE EEE1CA100SR | T | 36.6/126.7 |
| C504 | 4030011600 | S.CER C1608 JB 1E 104K-T | T | 21.4/153.1 |
| C505 | 4550007470 | S.TAN F931A107MNMBMA | B | 19.2/140.3 |
| C506 | 4030011600 | S.CER C1608 JB 1E 104K-T | T | 21.4/141.0 |
| C507 | 4030011600 | S.CER C1608 JB 1E 104K-T | T | 21.4/137.1 |
| C509 | 4030011600 | S.CER C1608 JB 1E 104K-T | T | 25.8/132.6 |
| C510 | 4030011600 | S.CER C1608 JB 1E 104K-T | T | 28.4/132.6 |
| C511 | 4030011600 | S.CER C1608 JB 1E 104K-T | T | 32.2/132.6 |
| C512 | 4030011600 | S.CER C1608 JB 1E 104K-T | T | 34.8/132.6 |
| C513 | 4030011600 | S.CER C1608 JB 1E 104K-T | T | 37.4/132.6 |
| C514 | 4030011600 | S.CER C1608 JB 1E 104K-T | T | 41.2/136.1 |
| C515 | 4030011600 | S.CER C1608 JB 1E 104K-T | T | 41.3/139.7 |
| C516 | 4030011600 | S.CER C1608 JB 1E 104K-T | T | 41.3/142.3 |
| C517 | 4030011600 | S.CER C1608 JB 1E 104K-T | T | 37.6/151.8 |
| C518 | 4030011600 | S.CER C1608 JB 1E 104K-T | T | 34.8/151.8 |
| C519 | 4030011600 | S.CER C1608 JB 1E 104K-T | T | 31.2/151.8 |
| C520 | 4030011600 | S.CER C1608 JB 1E 104K-T | T | 23.3/151.9 |
| C521 | 4030011600 | S.CER C1608 JB 1E 104K-T | T | 41.6/134.0 |
| C522 | 4550007220 | S.TAN F931A476MCMBMA | B | 40.7/145.0 |
| C525 | 4030006880 | S.CER C1608 JB 1H 472K-T | T | 35.4/154.5 |
| C526 | 4030011600 | S.CER C1608 JB 1E 104K-T | T | 36.7/154.5 |
| C531 | 4030006880 | S.CER C1608 JB 1H 472K-T | T | 14.6/137.5 |
| C532 | 4030007070 | S.CER C1608 CH 1H 330J-T | T | 17.2/137.5 |
| C533 | 4030007110 | S.CER C1608 CH 1H 680J-T | T | 17.3/133.4 |
| C534 | 4030007110 | S.CER C1608 CH 1H 680J-T | T | 16.8/130.1 |
| C535 | 4030007070 | S.CER C1608 CH 1H 330J-T | T | 18.1/127.0 |
| C536 | 4030006880 | S.CER C1608 JB 1H 472K-T | T | 20.9/127.6 |
| C537 | 4030006880 | S.CER C1608 JB 1H 472K-T | T | 27.2/126.4 |
| C540 | 4030006880 | S.CER C1608 JB 1H 472K-T | B | 56.3/142.8 |
| C541 | 4510008540 | S.ELE EEE1CA100SR | T | 51.0/139.3 |
| C542 | 4340000260 | S.MYL ECPU1C104MA5 | B | 47.8/128.7 |
| C543 | 4030007060 | S.CER C1608 CH 1H 270J-T | T | 62.2/136.4 |
| C545 | 4030007060 | S.CER C1608 CH 1H 270J-T | T | 70.0/137.1 |
| C546 | 4610001830 | S.TRI TZB4S100AB10R00 (TZBX4N100BA110) | T | 65.8/138.7 |
| C547 | 4030007130 | S.CER C1608 CH 1H 101J-T | T | 71.3/137.1 |
| C548 | 4030007010 | S.CER C1608 CH 1H 100D-T | T | 71.3/139.9 |
| C549 | 4030007050 | S.CER C1608 CH 1H 220J-T | T | 68.9/145.1 |
| C550 | 4030006880 | S.CER C1608 JB 1H 472K-T | T | 66.3/143.0 |
| C551 | 4030009520 | S.CER C1608 CH 1H 020B-T | T | 71.3/142.8 |
| C552 | 4030017810 | S.CER C1608 CH 1H 102J-T | B | 54.6/139.5 |
| C553 | 4030006880 | S.CER C1608 JB 1H 472K-T | B | 56.3/139.5 |
| C554 | 4510008500 | S.ELE EEE1CA101WP | T | 50.9/146.6 |
| C555 | 4030006880 | S.CER C1608 JB 1H 472K-T | B | 47.8/149.6 |
| C556 | 4550007220 | S.TAN F931A476MCMBMA | B | 76.4/136.1 |
| C558 | 4550007520 | S.TAN F931A106MAABMA | B | 43.4/132.5 |

## [RXPLL-B UNIT]

| REF NO. | PARTS NO. | DESCRIPTION | M. | H/V LOCATION |
|---|---|---|---|---|
| C559 | 4550007400 | S.TAN F931A225MAABMA | B | 43.4/129.9 |
| C561 | 4550007520 | S.TAN F931A106MAABMA | T | 70.1/157.6 |
| C562 | 4030006880 | S.CER C1608 JB 1H 472K-T | T | 68.3/155.5 |
| C563 | 4030017810 | S.CER C1608 CH 1H 102J-T | B | 60.1/158.1 |
| C564 | 4030006880 | S.CER C1608 JB 1H 472K-T | B | 58.8/158.1 |
| C565 | 4510008520 | S.ELE EEE1CA470SP | T | 50.9/155.6 |
| C566 | 4030006880 | S.CER C1608 JB 1H 472K-T | T | 64.4/155.5 |
| C571 | 4030006880 | S.CER C1608 JB 1H 472K-T | B | 58.5/161.3 |
| C573 | 4030007040 | S.CER C1608 CH 1H 180J-T | B | 72.5/166.8 |
| C574 | 4030009510 | S.CER C1608 CH 1H 010B-T | T | 72.6/169.1 |
| C575 | 4030007040 | S.CER C1608 CH 1H 180J-T | T | 72.6/171.9 |
| C580 | 4030006880 | S.CER C1608 JB 1H 472K-T | T | 41.9/152.4 |
| C581 | 4030006880 | S.CER C1608 JB 1H 472K-T | T | 41.9/144.2 |
| C591 | 4030006880 | S.CER C1608 JB 1H 472K-T | T | 63.5/171.2 |
| C592 | 4030007060 | S.CER C1608 CH 1H 270J-T | T | 62.8/163.1 |
| C593 | 4510008540 | S.ELE EEE1CA100SR | T | 54.4/170.7 |
| C594 | 4030006880 | S.CER C1608 JB 1H 472K-T | T | 57.5/171.9 |
| C596 | 4030006880 | S.CER C1608 JB 1H 472K-T | B | 63.7/168.1 |
| C597 | 4030007050 | S.CER C1608 CH 1H 220J-T | T | 62.2/171.2 |
| C601 | 4030006880 | S.CER C1608 JB 1H 472K-T | T | 47.3/116.4 |
| C602 | 4030006880 | S.CER C1608 JB 1H 472K-T | T | 49.5/121.4 |
| C607 | 4030006880 | S.CER C1608 JB 1H 472K-T | T | 51.2/115.4 |
| C608 | 4030006880 | S.CER C1608 JB 1H 472K-T | T | 53.2/115.9 |
| C609 | 4030007100 | S.CER C1608 CH 1H 560J-T | T | 53.2/114.6 |
| C610 | 4030008750 | S.CER C1608 CH 1H 360J-T | T | 55.2/115.4 |
| C611 | 4030007140 | S.CER C1608 CH 1H 121J-T | T | 56.3/113.5 |
| C612 | 4030007020 | S.CER C1608 CH 1H 120J-T | T | 57.1/114.8 |
| C613 | 4030007110 | S.CER C1608 CH 1H 680J-T | T | 56.3/112.2 |
| C651 | 4030006880 | S.CER C1608 JB 1H 472K-T | T | 13.5/174.0 |
| C652 | 4030011600 | S.CER C1608 JB 1E 104K-T | T | 12.8/176.3 |
| C653 | 4510008540 | S.ELE EEE1CA100SR | T | 6.8/172.6 |
| C654 | 4030011600 | S.CER C1608 JB 1E 104K-T | B | 17.4/170.5 |
| C655 | 4030011600 | S.CER C1608 JB 1E 104K-T | T | 25.9/161.4 |
| C656 | 4030011600 | S.CER C1608 JB 1E 104K-T | T | 25.8/177.1 |
| C657 | 4030011600 | S.CER C1608 JB 1E 104K-T | T | 31.7/169.3 |
| C658 | 4030011600 | S.CER C1608 JB 1E 104K-T | T | 13.5/172.7 |
| C659 | 4030011600 | S.CER C1608 JB 1E 104K-T | T | 16.5/163.4 |
| C660 | 4030006880 | S.CER C1608 JB 1H 472K-T | T | 17.6/161.4 |
| C661 | 4030011600 | S.CER C1608 JB 1E 104K-T | T | 13.3/166.1 |
| C662 | 4550007220 | S.TAN F931A476MCMBMA | B | 30.6/171.0 |
| C680 | 4030006880 | S.CER C1608 JB 1H 472K-T | T | 34.3/177.1 |
| C681 | 4030007160 | S.CER C1608 CH 1H 181J-T | T | 40.3/177.1 |
| C682 | 4030007140 | S.CER C1608 CH 1H 121J-T | T | 39.6/175.2 |
| C683 | 4030011330 | S.CER C1608 CH 1H 391J-T | T | 40.9/175.2 |
| C684 | 4030007080 | S.CER C1608 CH 1H 390J-T | B | 39.3/174.0 |
| C685 | 4030011280 | S.CER C1608 CH 1H 271J-T | B | 42.3/172.6 |
| C686 | 4030010760 | S.CER C1608 CH 1H 331J-T | B | 39.3/170.6 |
| C687 | 4030018580 | S.CER C1608 CH 1H 821J-T | T | 41.0/169.7 |
| C688 | 4030010760 | S.CER C1608 CH 1H 331J-T | B | 37.5/169.7 |
| C689 | 4030011600 | S.CER C1608 JB 1E 104K-T | T | 37.4/166.4 |
| C690 | 4030011600 | S.CER C1608 JB 1E 104K-T | T | 37.4/161.3 |
| C691 | 4030011600 | S.CER C1608 JB 1E 104K-T | T | 46.4/164.0 |
| C692 | 4030006880 | S.CER C1608 JB 1H 472K-T | T | 40.3/162.1 |
| C693 | 4030006880 | S.CER C1608 JB 1H 472K-T | B | 58.4/169.6 |
| C694 | 4030006880 | S.CER C1608 JB 1H 472K-T | B | 58.4/164.2 |
| C703 | 4030017810 | S.CER C1608 CH 1H 102J-T | T | 24.3/116.6 |
| C704 | 4030006880 | S.CER C1608 JB 1H 472K-T | T | 23.0/116.6 |
| C705 | 4510008500 | S.ELE EEE1CA101WP | T | 29.4/118.7 |
| C707 | 4030011600 | S.CER C1608 JB 1E 104K-T | T | 32.1/113.7 |
| C708 | 4030011600 | S.CER C1608 JB 1E 104K-T | T | 32.1/108.1 |
| C709 | 4030007070 | S.CER C1608 CH 1H 330J-T | T | 38.8/112.9 |
| C710 | 4030006880 | S.CER C1608 JB 1H 472K-T | T | 36.2/112.9 |
| C711 | 4030009540 | S.CER C1608 CH 1H 1R5B-T | B | 39.3/113.6 |
| C712 | 4030007070 | S.CER C1608 CH 1H 330J-T | T | 36.2/114.2 |
| C713 | 4030006880 | S.CER C1608 JB 1H 472K-T | T | 42.0/118.8 |
| C1000 | 4030007050 | S.CER C1608 CH 1H 220J-T | B | 177.2/13.9 |
| C1002 | 4030006880 | S.CER C1608 JB 1H 472K-T | B | 153.1/16.2 |
| C1003 | 4030012600 | S.CER C2012 JB 1A 105M-T | T | 157.5/8.3 |
| C1004 | 4030011600 | S.CER C1608 JB 1E 104K-T | B | 169.6/8.7 |
| C1005 | 4030011600 | S.CER C1608 JB 1E 104K-T | T | 162.9/17.3 |
| C1006 | 4030010210 | S.CER C3216 JB 1C 105M-T | T | 173.8/18.6 |
| C1007 | 4030006880 | S.CER C1608 JB 1H 472K-T | T | 172.4/23.9 |
| C1008 | 4030006880 | S.CER C1608 JB 1H 472K-T | T | 160.0/24.0 |
| C1009 | 4030006880 | S.CER C1608 JB 1H 472K-T | T | 147.6/23.8 |
| C1010 | 4030012600 | S.CER C2012 JB 1A 105M-T | T | 154.5/28.9 |
| C1011 | 4030012600 | S.CER C2012 JB 1A 105M-T | T | 144.2/29.3 |
| C1012 | 4030010210 | S.CER C3216 JB 1C 105M-T | T | 144.9/40.2 |
| C1013 | 4030012600 | S.CER C2012 JB 1A 105M-T | T | 144.2/33.2 |
| C1014 | 4030018810 | S.CER C3216 CH 1H 333J-T | B | 151.6/48.3 |
| C1015 | 4030012600 | S.CER C2012 JB 1A 105M-T | T | 163.6/13.8 |
| C1016 | 4030012600 | S.CER C2012 JB 1A 105M-T | T | 173.6/33.2 |
| C1017 | 4030012600 | S.CER C2012 JB 1A 105M-T | T | 163.3/33.2 |
| C1020 | 4030012600 | S.CER C2012 JB 1A 105M-T | B | 170.0/38.6 |
| C1021 | 4030012600 | S.CER C2012 JB 1A 105M-T | B | 154.0/38.6 |
| C1024 | 4030010210 | S.CER C3216 JB 1C 105M-T | B | 170.5/45.5 |
| C1025 | 4030010210 | S.CER C3216 JB 1C 105M-T | B | 154.7/45.5 |
| C1026 | 4030010210 | S.CER C3216 JB 1C 105M-T | T | 171.4/52.7 |
| C1027 | 4030010210 | S.CER C3216 JB 1C 105M-T | T | 165.6/52.7 |
| C1028 | 4030006880 | S.CER C1608 JB 1H 472K-T | B | 156.4/65.4 |
| C1029 | 4030006880 | S.CER C1608 JB 1H 472K-T | T | 168.5/65.4 |
| C1030 | 4030010210 | S.CER C3216 JB 1C 105M-T | T | 164.6/18.0 |
| C1031 | 4030012600 | S.CER C2012 JB 1A 105M-T | B | 169.2/10.8 |
| C1033 | 4550007500 | S.TAN F931D106MBABMA | B | 146.5/47.7 |
| Eqv. | 4550006470 | S.TAN TEESVB2 1D 106M8R | | |
| C1034 | 4550007500 | S.TAN F931D106MBABMA | B | 174.0/52.1 |
| Eqv. | 4550006470 | S.TAN TEESVB2 1D 106M8R | | |
| C1035 | 4550007500 | S.TAN F931D106MBABMA | B | 164.6/15.8 |
| Eqv. | 4550006470 | S.TAN TEESVB2 1D 106M8R | | |
| C1036 | 4030007120 | S.CER C1608 CH 1H 820J-T | T | 160.2/12.8 |
| C1037 | 4030007090 | S.CER C1608 CH 1H 470J-T | B | 149.4/49.3 |
| C1038 | 4030017810 | S.CER C1608 CH 1H 102J-T | T | 146.6/26.3 |
| C1039 | 4030017810 | S.CER C1608 CH 1H 102J-T | T | 146.6/41.0 |
| C1040 | 4030017810 | S.CER C1608 CH 1H 102J-T | T | 145.3/36.4 |
| C1041 | 4030006990 | S.CER C1608 CH 1H 080D-T | B | 153.5/31.0 |
| C1046 | 4030007010 | S.CER C1608 CH 1H 100D-T | B | 168.5/53.8 |

Eqv.= This component is equivalent to the REF No. component listed above, and may be substituted on parts orders and repairs.

M.=Mounted side (T: Mounted on the Top side, B: Mounted on the Bottom side)
S.=Surface mount

## [RXPLL-B UNIT]

| REF NO. | PARTS NO. | DESCRIPTION | M. | H/V LOCATION |
|---|---|---|---|---|
| C1048 | 4030006880 | S.CER C1608 JB 1H 472K-T | B | 170.7/41.7 |
| C1049 | 4030006880 | S.CER C1608 JB 1H 472K-T | B | 154.7/41.7 |
| C1050 | 4030017810 | S.CER C1608 CH 1H 102J-T | B | 170.5/49.5 |
| C1051 | 4030017810 | S.CER C1608 CH 1H 102J-T | B | 154.7/49.4 |
| C1052 | 4030007060 | S.CER C1608 CH 1H 270J-T | B | 164.1/29.6 |
| C1053 | 4030007110 | S.CER C1608 CH 1H 680J-T | T | 175.3/77.3 |
| C1054 | 4030007010 | S.CER C1608 CH 1H 100D-T | B | 175.8/72.4 |
| C1055 | 4030007140 | S.CER C1608 CH 1H 121J-T | B | 175.8/74.2 |
| C1056 | 4030007050 | S.CER C1608 CH 1H 220J-T | T | 175.3/76.0 |
| C1057 | 4030007130 | S.CER C1608 CH 1H 101J-T | T | 172.1/77.2 |
| C1058 | 4030009920 | S.CER C1608 CH 1H 050B-T | B | 173.3/12.7 |
| C1060 | 4030017810 | S.CER C1608 CH 1H 102J-T | T | 178.6/94.4 |
| C1061 | 4030007090 | S.CER C1608 CH 1H 470J-T | B | 147.7/91.9 |
| C1062 | 4030007170 | S.CER C1608 CH 1H 221J-T | B | 149.5/91.9 |
| C1064 | 4030007090 | S.CER C1608 CH 1H 470J-T | T | 148.8/80.2 |
| C1066 | 4030007010 | S.CER C1608 CH 1H 100D-T | T | 138.7/82.0 |
| C1067 | 4030007010 | S.CER C1608 CH 1H 100D-T | T | 173.4/77.2 |
| C1070 | 4030006980 | S.CER C1608 CH 1H 070D-T | T | 137.2/82.0 |
| C1071 | 4030007100 | S.CER C1608 CH 1H 560J-T | B | 162.2/75.4 |
| C1072 | 4030007170 | S.CER C1608 CH 1H 221J-T | B | 162.0/78.7 |
| C1073 | 4030007080 | S.CER C1608 CH 1H 390J-T | B | 164.1/76.5 |
| C1074 | 4030007060 | S.CER C1608 CH 1H 270J-T | T | 148.8/78.7 |
| C1081 | 4030006900 | S.CER C1608 JB 1H 103K-T | B | 156.1/86.0 |
| C1082 | 4030006900 | S.CER C1608 JB 1H 103K-T | B | 151.3/91.9 |
| C1083 | 4030006900 | S.CER C1608 JB 1H 103K-T | B | 151.2/81.7 |
| C1084 | 4030006880 | S.CER C1608 JB 1H 472K-T | B | 149.4/81.7 |
| C1085 | 4030006880 | S.CER C1608 JB 1H 472K-T | B | 153.0/81.7 |
| C1091 | 4030006880 | S.CER C1608 JB 1H 472K-T | T | 149.4/149.4 |
| C1092 | 4030006880 | S.CER C1608 JB 1H 472K-T | T | 147.0/138.5 |
| C1093 | 4030006880 | S.CER C1608 JB 1H 472K-T | T | 161.3/135.9 |
| C1101 | 4030006900 | S.CER C1608 JB 1H 103K-T | T | 177.0/91.0 |
| C1102 | 4030006900 | S.CER C1608 JB 1H 103K-T | T | 175.4/115.5 |
| C1103 | 4030011600 | S.CER C1608 JB 1E 104K-T | T | 179.6/116.4 |
| C1104 | 4030011600 | S.CER C1608 JB 1E 104K-T | T | 175.4/87.7 |
| C1106 | 4030011600 | S.CER C1608 JB 1E 104K-T | T | 179.3/128.8 |
| C1107 | 4030011600 | S.CER C1608 JB 1E 104K-T | B | 172.3/124.3 |
| C1109 | 4030007090 | S.CER C1608 CH 1H 470J-T | T | 175.7/137.9 |
| C1110 | 4030006900 | S.CER C1608 JB 1H 103K-T | T | 175.7/136.6 |
| C1111 | 4030011600 | S.CER C1608 JB 1E 104K-T | T | 176.7/132.0 |
| C1112 | 4030006900 | S.CER C1608 JB 1H 103K-T | T | 179.3/132.0 |
| C1113 | 4030007090 | S.CER C1608 CH 1H 470J-T | T | 178.6/140.9 |
| C1114 | 4030006900 | S.CER C1608 JB 1H 103K-T | B | 178.5/138.0 |
| C1115 | 4030011600 | S.CER C1608 JB 1E 104K-T | T | 175.7/140.1 |
| C1116 | 4030006900 | S.CER C1608 JB 1H 103K-T | T | 165.7/138.7 |
| C1117 | 4030007010 | S.CER C1608 CH 1H 100D-T | T | 169.7/142.2 |
| C1118 | 4030011600 | S.CER C1608 JB 1E 104K-T | T | 171.0/142.2 |
| C1119 | 4030006880 | S.CER C1608 JB 1H 472K-T | T | 172.0/146.6 |
| C1120 | 4030006880 | S.CER C1608 JB 1H 472K-T | T | 172.0/148.4 |
| C1121 | 4030011600 | S.CER C1608 JB 1E 104K-T | T | 180.6/147.7 |
| C1122 | 4030009530 | S.CER C1608 CH 1H 030B-T | T | 178.2/120.3 |
| C1123 | 4030006900 | S.CER C1608 JB 1H 103K-T | T | 182.1/100.9 |
| C1124 | 4030006900 | S.CER C1608 JB 1H 103K-T | T | 175.4/105.9 |
| C1125 | 4030006900 | S.CER C1608 JB 1H 103K-T | T | 175.5/85.1 |
| C1126 | 4030011600 | S.CER C1608 JB 1E 104K-T | T | 173.5/131.1 |
| C1151 | 4030007110 | S.CER C1608 CH 1H 680J-T | B | 123.2/64.1 |
| C1152 | 4030007110 | S.CER C1608 CH 1H 680J-T | B | 123.2/57.1 |
| C1153 | 4030017810 | S.CER C1608 CH 1H 102J-T | T | 131.5/64.0 |
| C1201 | 4030007110 | S.CER C1608 CH 1H 680J-T | B | 120.3/21.8 |
| C1202 | 4030007110 | S.CER C1608 CH 1H 680J-T | B | 118.5/21.8 |
| C1207 | 4030006880 | S.CER C1608 JB 1H 472K-T | B | 123.1/11.9 |
| C1226 | 4030009500 | S.CER C1608 CH 1H 0R5B-T | B | 125.0/35.7 |
| C1227 | 4030009500 | S.CER C1608 CH 1H 0R5B-T | B | 115.5/35.7 |
| C1228 | 4030009920 | S.CER C1608 CH 1H 050B-T | B | 114.0/41.9 |
| C1231 | 4030006900 | S.CER C1608 JB 1H 103K-T | T | 118.9/21.5 |
| C1232 | 4030006900 | S.CER C1608 JB 1H 103K-T | T | 109.0/21.5 |
| C1234 | 4030006900 | S.CER C1608 JB 1H 103K-T | B | 123.6/38.3 |
| C1235 | 4030006880 | S.CER C1608 JB 1H 472K-T | B | 116.6/32.2 |
| C1236 | 4030006900 | S.CER C1608 JB 1H 103K-T | T | 119.8/40.1 |
| C1238 | 4030006900 | S.CER C1608 JB 1H 103K-T | B | 114.1/38.3 |
| C1239 | 4030006880 | S.CER C1608 JB 1H 472K-T | B | 106.8/32.3 |
| C1240 | 4030006900 | S.CER C1608 JB 1H 103K-T | T | 111.7/40.5 |
| C1241 | 4030006900 | S.CER C1608 JB 1H 103K-T | T | 113.6/38.6 |
| C1243 | 4030006880 | S.CER C1608 JB 1H 472K-T | B | 129.6/46.7 |
| C1244 | 4030007080 | S.CER C1608 CH 1H 390J-T | T | 149.7/67.0 |
| C1245 | 4030007130 | S.CER C1608 CH 1H 101J-T | T | 151.0/64.4 |
| C1246 | 4030007120 | S.CER C1608 CH 1H 820J-T | T | 151.0/67.1 |
| C1247 | 4030007090 | S.CER C1608 CH 1H 470J-T | T | 153.5/63.5 |
| C1248 | 4030007130 | S.CER C1608 CH 1H 101J-T | T | 153.5/66.8 |
| C1249 | 4030007020 | S.CER C1608 CH 1H 120J-T | T | 153.2/70.3 |
| C1250 | 4030007100 | S.CER C1608 CH 1H 560J-T | B | 152.5/74.3 |
| C1251 | 4030006900 | S.CER C1608 JB 1H 103K-T | T | 160.2/92.9 |
| C1252 | 4030006900 | S.CER C1608 JB 1H 103K-T | T | 152.7/92.9 |
| C1253 | 4030006900 | S.CER C1608 JB 1H 103K-T | B | 152.5/111.3 |
| C1255 | 4030017810 | S.CER C1608 CH 1H 102J-T | B | 155.8/99.3 |
| C1256 | 4030007010 | S.CER C1608 CH 1H 100D-T | T | 156.3/98.8 |
| C1257 | 4030011600 | S.CER C1608 JB 1E 104K-T | B | 155.8/103.0 |
| C1258 | 4030007080 | S.CER C1608 CH 1H 390J-T | B | 152.1/97.5 |
| C1264 | 4030007110 | S.CER C1608 CH 1H 680J-T | T | 122.0/51.1 |
| C1265 | 4610001830 | S.TRI TZB4S100AB10R00 (TZBX4N100BA110) | T | 163.8/70.8 |
| C1266 | 4030007020 | S.CER C1608 CH 1H 120J-T | T | 160.2/74.6 |
| C1267 | 4030006880 | S.CER C1608 JB 1H 472K-T | B | 157.0/126.5 |
| C1268 | 4030006980 | S.CER C1608 CH 1H 070D-T | T | 149.7/64.4 |
| C1302 | 4030007060 | S.CER C1608 CH 1H 270J-T | T | 159.3/111.0 |
| C1303 | 4030006980 | S.CER C1608 CH 1H 070D-T | T | 159.3/112.9 |
| C1304 | 4030007070 | S.CER C1608 CH 1H 330J-T | T | 159.3/114.2 |
| C1305 | 4030007010 | S.CER C1608 CH 1H 100D-T | T | 153.5/114.6 |
| C1306 | 4030009650 | S.CER C1608 CH 1H 240J-T | T | 159.3/115.5 |
| C1307 | 4030007030 | S.CER C1608 CH 1H 150J-T | T | 153.5/120.2 |
| C1308 | 4030006900 | S.CER C1608 JB 1H 103K-T | T | 155.1/127.1 |
| C1309 | 4030007080 | S.CER C1608 CH 1H 390J-T | T | 156.5/125.8 |
| C1310 | 4030007080 | S.CER C1608 CH 1H 390J-T | T | 159.1/128.4 |
| C1311 | 4030006900 | S.CER C1608 JB 1H 103K-T | B | 149.0/118.9 |
| C1312 | 4030007060 | S.CER C1608 CH 1H 270J-T | T | 155.5/111.7 |
| C1313 | 4030007060 | S.CER C1608 CH 1H 270J-T | T | 159.1/127.1 |

## [RXPLL-B UNIT]

| REF NO. | PARTS NO. | DESCRIPTION | M. | H/V LOCATION |
|---|---|---|---|---|
| C1355 | 4030006880 | S.CER C1608 JB 1H 472K-T | T | 144.7/70.0 |
| C1357 | 4030007000 | S.CER C1608 CH 1H 090D-T | B | 144.6/67.2 |
| C1358 | 4030011600 | S.CER C1608 JB 1E 104K-T | B | 139.2/70.5 |
| C1360 | 4030011600 | S.CER C1608 JB 1E 104K-T | B | 146.4/70.5 |
| C1361 | 4030007020 | S.CER C1608 CH 1H 120J-T | B | 137.8/69.5 |
| C1362 | 4030011600 | S.CER C1608 JB 1E 104K-T | T | 137.5/65.6 |
| C1403 | 4030017810 | S.CER C1608 CH 1H 102J-T | T | 114.8/70.4 |
| C1404 | 4030017810 | S.CER C1608 CH 1H 102J-T | T | 116.3/104.8 |
| C1405 | 4030006900 | S.CER C1608 JB 1H 103K-T | B | 115.9/63.9 |
| C1406 | 4030017810 | S.CER C1608 CH 1H 102J-T | T | 114.3/66.3 |
| C1407 | 4030017810 | S.CER C1608 CH 1H 102J-T | T | 120.0/70.3 |
| C1408 | 4030006900 | S.CER C1608 JB 1H 103K-T | T | 116.4/73.0 |
| C1409 | 4030006900 | S.CER C1608 JB 1H 103K-T | T | 114.4/68.2 |
| C1410 | 4030007030 | S.CER C1608 CH 1H 150J-T | T | 116.3/83.4 |
| C1411 | 4030006990 | S.CER C1608 CH 1H 080D-T | T | 112.2/87.9 |
| C1412 | 4030007030 | S.CER C1608 CH 1H 150J-T | T | 116.3/93.8 |
| C1413 | 4030007020 | S.CER C1608 CH 1H 120J-T | T | 107.0/83.4 |
| C1414 | 4030006990 | S.CER C1608 CH 1H 080D-T | T | 103.6/86.7 |
| C1415 | 4030007020 | S.CER C1608 CH 1H 120J-T | T | 107.0/93.8 |
| C1416 | 4030006900 | S.CER C1608 JB 1H 103K-T | T | 113.2/103.5 |
| C1417 | 4030006900 | S.CER C1608 JB 1H 103K-T | T | 110.6/107.7 |
| C1418 | 4030017810 | S.CER C1608 CH 1H 102J-T | T | 110.4/105.8 |
| C1419 | 4030017810 | S.CER C1608 CH 1H 102J-T | T | 111.0/109.0 |
| C1420 | 4030007120 | S.CER C1608 CH 1H 820J-T | B | 113.2/114.3 |
| C1421 | 4030007150 | S.CER C1608 CH 1H 151J-T | B | 115.0/114.3 |
| C1423 | 4030010750 | S.CER C1608 CH 1H 201J-T | B | 120.3/111.1 |
| C1424 | 4030007010 | S.CER C1608 CH 1H 100D-T | T | 132.8/103.4 |
| C1425 | 4030011600 | S.CER C1608 JB 1E 104K-T | T | 136.5/106.3 |
| C1426 | 4030011600 | S.CER C1608 JB 1E 104K-T | T | 137.8/106.3 |
| C1427 | 4030006900 | S.CER C1608 JB 1H 103K-T | T | 133.9/106.3 |
| C1428 | 4030006980 | S.CER C1608 CH 1H 070D-T | T | 119.6/109.0 |
| C1429 | 4030006900 | S.CER C1608 JB 1H 103K-T | T | 120.6/113.6 |
| C1430 | 4030007040 | S.CER C1608 CH 1H 180J-T | B | 131.9/115.4 |
| C1431 | 4030017810 | S.CER C1608 CH 1H 102J-T | T | 127.1/116.2 |
| C1432 | 4030009980 | S.CER C1608 JB 1H 152K-T | T | 129.1/114.2 |
| C1433 | 4030011600 | S.CER C1608 JB 1E 104K-T | T | 130.4/114.2 |
| C1434 | 4030009920 | S.CER C1608 CH 1H 050B-T | B | 124.7/134.4 |
| C1435 | 4030009920 | S.CER C1608 CH 1H 050B-T | B | 124.7/131.6 |
| C1436 | 4030011600 | S.CER C1608 JB 1E 104K-T | B | 137.3/122.2 |
| C1437 | 4030009920 | S.CER C1608 CH 1H 050B-T | T | 104.0/83.4 |
| C1438 | 4030009920 | S.CER C1608 CH 1H 050B-T | T | 102.3/86.7 |
| C1439 | 4030009920 | S.CER C1608 CH 1H 050B-T | T | 110.0/93.8 |
| C1441 | 4030006880 | S.CER C1608 JB 1H 472K-T | T | 120.6/116.2 |
| C1451 | 4030007020 | S.CER C1608 CH 1H 120J-T | T | 125.5/80.2 |
| C1453 | 4030007030 | S.CER C1608 CH 1H 150J-T | T | 122.1/85.1 |
| C1454 | 4030007030 | S.CER C1608 CH 1H 150J-T | T | 120.8/85.1 |
| C1456 | 4030007020 | S.CER C1608 CH 1H 120J-T | T | 125.6/90.9 |
| C1457 | 4030006900 | S.CER C1608 JB 1H 103K-T | T | 118.4/72.9 |
| C1458 | 4030006900 | S.CER C1608 JB 1H 103K-T | T | 116.6/103.5 |
| C1501 | 4030018530 | S.CER C3216 CH 1H 103J-T | T | 131.3/124.6 |
| C1502 | 4550007660 | S.TAN F931E105MAABMA | T | 132.1/139.3 |
| Eqv. | 4550003220 | S.TAN TEESVA 1E 105M8R | | |
| C1503 | 4030006900 | S.CER C1608 JB 1H 103K-T | T | 137.0/142.1 |
| C1504 | 4030012610 | S.CER C2012 JB 1C 474K-T | T | 136.7/140.5 |
| C1505 | 4030007010 | S.CER C1608 CH 1H 100D-T | T | 130.0/143.5 |
| C1506 | 4030010760 | S.CER C1608 CH 1H 331J-T | T | 131.3/146.3 |
| C1507 | 4510008540 | S.ELE EEE1CA100SR | T | 142.6/140.8 |
| C1508 | 4030011600 | S.CER C1608 JB 1E 104K-T | B | 128.8/148.8 |
| C1509 | 4030018800 | S.CER C3216 CH 1H 223J-T | T | 135.8/145.1 |
| C1510 | 4030007110 | S.CER C1608 CH 1H 680J-T | T | 136.5/158.9 |
| C1511 | 4510008540 | S.ELE EEE1CA100SR | T | 132.7/150.6 |
| C1512 | 4030011600 | S.CER C1608 JB 1E 104K-T | T | 129.6/149.0 |
| C1513 | 4030011600 | S.CER C1608 JB 1E 104K-T | T | 129.6/158.1 |
| C1514 | 4510008540 | S.ELE EEE1CA100SR | T | 132.7/156.5 |
| C1515 | 4030007160 | S.CER C1608 CH 1H 181J-T | T | 132.2/160.8 |
| C1516 | 4030009350 | S.CER C1608 CH 1H 3R5B-T | T | 130.9/160.8 |
| C1517 | 4030007110 | S.CER C1608 CH 1H 680J-T | T | 115.3/155.0 |
| C1518 | 4030018530 | S.CER C3216 CH 1H 103J-T | T | 131.3/132.8 |
| C1519 | 4550007660 | S.TAN F931E105MAABMA | T | 122.9/140.9 |
| Eqv. | 4550003220 | S.TAN TEESVA 1E 105M8R | | |
| C1520 | 4030006900 | S.CER C1608 JB 1H 103K-T | T | 119.8/140.8 |
| C1521 | 4030012610 | S.CER C2012 JB 1C 474K-T | T | 116.2/142.1 |
| C1522 | 4030007010 | S.CER C1608 CH 1H 100D-T | T | 123.7/143.5 |
| C1523 | 4030010760 | S.CER C1608 CH 1H 331J-T | T | 122.4/146.3 |
| C1524 | 4030018800 | S.CER C3216 CH 1H 223J-T | T | 117.9/145.2 |
| C1525 | 4510008540 | S.ELE EEE1CA100SR | T | 124.9/150.6 |
| C1526 | 4030011600 | S.CER C1608 JB 1E 104K-T | T | 128.0/149.0 |
| C1527 | 4030011600 | S.CER C1608 JB 1E 104K-T | T | 128.0/158.1 |
| C1528 | 4510008540 | S.ELE EEE1CA100SR | T | 124.9/156.5 |
| C1529 | 4030017870 | S.CER C1608 CH 1H 681J-T | T | 125.4/160.8 |
| C1530 | 4030011330 | S.CER C1608 CH 1H 391J-T | T | 126.7/160.8 |
| C1531 | 4510008500 | S.ELE EEE1CA101WP | T | 111.3/167.3 |
| C1532 | 4030011600 | S.CER C1608 JB 1E 104K-T | T | 107.1/167.3 |
| C1533 | 4030011600 | S.CER C1608 JB 1E 104K-T | T | 115.5/167.3 |
| C1534 | 4510008500 | S.ELE EEE1CA101WP | T | 119.7/167.3 |
| C1535 | 4030011600 | S.CER C1608 JB 1E 104K-T | T | 133.7/172.6 |
| C1536 | 4030017870 | S.CER C1608 CH 1H 681J-T | T | 126.2/179.5 |
| C1537 | 4510008500 | S.ELE EEE1CA101WP | T | 111.3/176.0 |
| C1538 | 4030011600 | S.CER C1608 JB 1E 104K-T | T | 107.1/176.0 |
| C1539 | 4030011600 | S.CER C1608 JB 1E 104K-T | T | 115.5/176.0 |
| C1540 | 4510008500 | S.ELE EEE1CA101WP | T | 119.7/176.0 |
| C1541 | 4030007050 | S.CER C1608 CH 1H 220J-T | T | 124.0/175.0 |
| C1651 | 4030006880 | S.CER C1608 JB 1H 472K-T | B | 105.5/144.1 |
| C1653 | 4030006880 | S.CER C1608 JB 1H 472K-T | B | 109.0/137.2 |
| C1654 | 4030017810 | S.CER C1608 CH 1H 102J-T | B | 106.9/137.2 |
| C1655 | 4030009530 | S.CER C1608 CH 1H 030B-T | T | 107.6/136.8 |
| C1656 | 4610001970 | S.TRI TZC3P200A110R00 (TZC03P200A1102) | T | 110.9/136.2 |
| C1657 | 4030010220 | S.CER C2012 CH 1H 102J-T | T | 116.4/122.8 |
| C1658 | 4030010220 | S.CER C2012 CH 1H 102J-T | T | 116.4/131.0 |
| C1659 | 4030011600 | S.CER C1608 JB 1E 104K-T | T | 107.8/120.1 |
| C1660 | 4030011600 | S.CER C1608 JB 1E 104K-T | B | 134.0/174.0 |
| C1661 | 4030011600 | S.CER C1608 JB 1E 104K-T | B | 145.2/171.4 |
| C1662 | 4030011600 | S.CER C1608 JB 1E 104K-T | T | 144.3/178.0 |
| C1663 | 4030011600 | S.CER C1608 JB 1E 104K-T | T | 135.1/170.2 |

Eqv.= This component is equivalent to the REF No. component listed above, and may be substituted on parts orders and repairs.

M.=Mounted side (T: Mounted on the Top side, B: Mounted on the Bottom side)
S.=Surface mount

## [RXPLL-B UNIT]

| REF NO. | PARTS NO. | DESCRIPTION | | M. | H/V LOCATION |
|---|---|---|---|---|---|
| C1665 | 4030006900 | S.CER | C1608 JB 1H 103K-T | T | 138.9/164.1 |
| C1666 | 4030006880 | S.CER | C1608 JB 1H 472K-T | B | 113.3/144.1 |
| C1701 | 4030011600 | S.CER | C1608 JB 1E 104K-T | T | 153.4/163.0 |
| C1702 | 4030011600 | S.CER | C1608 JB 1E 104K-T | T | 144.4/163.0 |
| C1703 | 4510004601 | ELE | 16 ME 1000 HC | | |
| C1704 | 4030011600 | S.CER | C1608 JB 1E 104K-T | B | 180.1/160.2 |
| C1705 | 4030011600 | S.CER | C1608 JB 1E 104K-T | B | 186.4/160.2 |
| C1706 | 4510008520 | S.ELE | EEE1CA470SP | T | 172.7/154.8 |
| C1707 | 4030011600 | S.CER | C1608 JB 1E 104K-T | T | 149.7/154.8 |
| C1708 | 4030006880 | S.CER | C1608 JB 1H 472K-T | T | 175.7/166.8 |
| C1709 | 4030006880 | S.CER | C1608 JB 1H 472K-T | T | 172.6/166.8 |
| C1710 | 4030006880 | S.CER | C1608 JB 1H 472K-T | T | 169.6/166.8 |
| C1711 | 4030011340 | S.CER | C1608 CH 1H 471J-T | T | 171.4/163.5 |
| C1712 | 4030011340 | S.CER | C1608 CH 1H 471J-T | T | 167.5/163.5 |
| C1713 | 4030006880 | S.CER | C1608 JB 1H 472K-T | B | 165.5/168.8 |
| C1714 | 4030006880 | S.CER | C1608 JB 1H 472K-T | B | 153.8/141.9 |
| C1716 | 4030006880 | S.CER | C1608 JB 1H 472K-T | B | 154.7/145.2 |
| C1717 | 4030006880 | S.CER | C1608 JB 1H 472K-T | B | 152.9/145.2 |
| C1719 | 4030006880 | S.CER | C1608 JB 1H 472K-T | B | 151.1/145.2 |
| C1720 | 4030006880 | S.CER | C1608 JB 1H 472K-T | B | 155.6/141.9 |
| C1721 | 4030006880 | S.CER | C1608 JB 1H 472K-T | B | 157.4/141.9 |
| RL1001 | 6330001750 | REL | FTR-B4CA012Z | | |
| RL1002 | 6330001750 | REL | FTR-B4CA012Z | | |
| RL1003 | 6330001750 | REL | FTR-B4CA012Z | | |
| RL1004 | 6330001750 | REL | FTR-B4CA012Z | | |
| RL1005 | 6330001750 | REL | FTR-B4CA012Z | | |
| RL1006 | 6330001750 | REL | FTR-B4CA012Z | | |
| RL1203 | 6330001750 | REL | FTR-B4CA012Z | | |
| RL1206 | 6330001750 | REL | FTR-B4CA012Z | | |
| J2 | 6510019991 | S.CON | 52808-2271(2291) | T | 25.0/9.0 |
| J10 | 6510028210 | CON | SJ050010 (TMP-J01X-V6) | | |
| J351 | 6510028210 | CON | SJ050010 (TMP-J01X-V6) | | |
| J561 | 6510028210 | CON | SJ050010 (TMP-J01X-V6) | | |
| J601 | 6510028210 | CON | SJ050010 (TMP-J01X-V6) | | |
| J681 | 6510028210 | CON | SJ050010 (TMP-J01X-V6) | | |
| J831 | 6510028210 | CON | SJ050010 (TMP-J01X-V6) | | |
| J1002 | 6510028210 | CON | SJ050010 (TMP-J01X-V6) | | |
| J1101 | 6510028210 | CON | SJ050010 (TMP-J01X-V6) | | |
| J1201 | 6510028210 | CON | SJ050010 (TMP-J01X-V6) | | |
| J1301 | 6510028210 | CON | SJ050010 (TMP-J01X-V6) | | |
| J1501 | 6510018961 | S.CON | B2B-PH-SM4-TB(LF)(SN) | T | 149.6/177.5 |
| J1701 | 6510019981 | S.CON | 52808-1671(1690) | T | 168.0/177.2 |
| W1052 | 9016201006 | WIR | 73/98/025/X98/X98 | | |
| W1401 | 9029495075 | JUM | 73/98/020/X98/X98 | | |
| W1411 | 7120000480 | S.JUM | MJP-0.4-T | T | 125.1/111.6 |
| EP20 | 6910012350 | S.BEA | MMZ1608Y 102BT | T | 85.4/126.0 |
| EP21 | 6910012350 | S.BEA | MMZ1608Y 102BT | T | 88.7/124.0 |
| EP22 | 6910012350 | S.BEA | MMZ1608Y 102BT | T | 90.0/124.0 |
| EP101 | 6910012350 | S.BEA | MMZ1608Y 102BT | B | 47.7/98.6 |
| EP102 | 6910012350 | S.BEA | MMZ1608Y 102BT | B | 47.7/96.8 |
| EP103 | 6910012350 | S.BEA | MMZ1608Y 102BT | T | 46.1/96.8 |
| EP104 | 6910012350 | S.BEA | MMZ1608Y 102BT | T | 46.1/92.9 |
| EP105 | 6910012350 | S.BEA | MMZ1608Y 102BT | T | 46.1/91.6 |
| EP106 | 6910012350 | S.BEA | MMZ1608Y 102BT | T | 46.1/89.0 |
| EP107 | 6910012350 | S.BEA | MMZ1608Y 102BT | B | 47.7/100.4 |
| EP1701 | 6910012350 | S.BEA | MMZ1608Y 102BT | T | 170.1/163.5 |
| EP1702 | 6910012350 | S.BEA | MMZ1608Y 102BT | T | 168.8/163.5 |
| EP1801 | 6910012350 | S.BEA | MMZ1608Y 102BT | B | 153.1/132.7 |
| EP1802 | 6910012350 | S.BEA | MMZ1608Y 102BT | B | 142.5/18.8 |
| EP1804 | 6910012350 | S.BEA | MMZ1608Y 102BT | B | 112.5/138.7 |
| EP1805 | 6910012350 | S.BEA | MMZ1608Y 102BT | B | 150.2/141.9 |
| EP1806 | 6910012350 | S.BEA | MMZ1608Y 102BT | B | 128.6/64.4 |
| EP1807 | 6910012350 | S.BEA | MMZ1608Y 102BT | B | 117.5/50.3 |
| EP1808 | 6910012350 | S.BEA | MMZ1608Y 102BT | B | 137.0/166.9 |
| EP1809 | 6910012350 | S.BEA | MMZ1608Y 102BT | B | 147.4/127.5 |
| EP1810 | 6910012350 | S.BEA | MMZ1608Y 102BT | B | 131.4/64.3 |
| EP1811 | 6910012350 | S.BEA | MMZ1608Y 102BT | T | 160.7/56.3 |
| EP1812 | 6910012350 | S.BEA | MMZ1608Y 102BT | B | 153.5/137.5 |
| EP1813 | 6910012350 | S.BEA | MMZ1608Y 102BT | B | 132.7/65.8 |
| EP1814 | 6910012350 | S.BEA | MMZ1608Y 102BT | B | 147.2/22.3 |
| EP1815 | 6910012350 | S.BEA | MMZ1608Y 102BT | B | 156.0/62.6 |
| EP1816 | 6910012350 | S.BEA | MMZ1608Y 102BT | B | 160.4/20.9 |
| EP1817 | 6910012350 | S.BEA | MMZ1608Y 102BT | B | 168.6/62.2 |
| EP1818 | 6910012350 | S.BEA | MMZ1608Y 102BT | B | 151.3/133.3 |
| EP1819 | 6910012350 | S.BEA | MMZ1608Y 102BT | B | 145.6/127.9 |
| EP1820 | 6910012350 | S.BEA | MMZ1608Y 102BT | B | 148.6/19.8 |
| EP1821 | 6910012350 | S.BEA | MMZ1608Y 102BT | B | 148.6/14.1 |
| EP1825 | 6910012350 | S.BEA | MMZ1608Y 102BT | B | 126.6/7.1 |
| EP1826 | 6910012350 | S.BEA | MMZ1608Y 102BT | B | 151.6/137.8 |
| EP1830 | 6910012350 | S.BEA | MMZ1608Y 102BT | B | 141.3/135.2 |
| EP1831 | 6910012350 | S.BEA | MMZ1608Y 102BT | B | 143.4/128.5 |
| EP1832 | 6910012350 | S.BEA | MMZ1608Y 102BT | B | 149.2/137.6 |
| EP1833 | 6910012350 | S.BEA | MMZ1608Y 102BT | B | 147.3/133.5 |
| EP1834 | 6910012350 | S.BEA | MMZ1608Y 102BT | T | 115.9/108.3 |
| EP1835 | 6910012350 | S.BEA | MMZ1608Y 102BT | B | 141.6/128.5 |
| EP1836 | 6910012350 | S.BEA | MMZ1608Y 102BT | T | 111.0/110.3 |
| EP1837 | 6910012350 | S.BEA | MMZ1608Y 102BT | B | 145.9/134.2 |
| EP1838 | 6910012350 | S.BEA | MMZ1608Y 102BT | T | 116.4/106.1 |

## [BPF UNIT]

| REF NO. | PARTS NO. | DESCRIPTION | | M. | H/V LOCATION |
|---|---|---|---|---|---|
| IC101 | 1130011510 | S.IC | BU2099FV-E2 | T | 9.5/77.6 |
| IC102 | 1130011510 | S.IC | BU2099FV-E2 | T | 9.8/100.9 |
| IC401 | 1130011510 | S.IC | BU2099FV-E2 | T | 10.3/39.4 |
| IC402 | 1130011510 | S.IC | BU2099FV-E2 | T | 9.6/59.5 |
| Q355 | 1590001330 | S.TRA | DTA114EUA T106 | T | 191.6/68.1 |
| Q381 | 1590000680 | S.TRA | DTC114EUA T106 | T | 232.0/60.3 |
| Q383 | 1590000680 | S.TRA | DTC114EUA T106 | T | 229.3/51.9 |
| Q384 | 1590000680 | S.TRA | DTC114EUA T106 | T | 226.2/51.9 |
| Q385 | 1590000680 | S.TRA | DTC114EUA T106 | T | 233.1/54.7 |
| Q386 | 1590000430 | S.TRA | DTC144EUA T106 | T | 230.1/54.7 |
| Q387 | 1590000680 | S.TRA | DTC114EUA T106 | T | 228.8/60.2 |
| Q401 | 1530002841 | S.TRA | 2SC4116-Y(TE85RF) | T | 234.5/108.2 |
| Q402 | 1530002060 | S.TRA | 2SC4081 T106 R | B | 224.2/99.3 |
| Q403 | 1590001330 | S.TRA | DTA114EUA T106 | B | 227.7/100.3 |
| Q404 | 1590000430 | S.TRA | DTC144EUA T106 | T | 232.0/108.2 |
| Q855 | 1590001330 | S.TRA | DTA114EUA T106 | T | 192.0/53.0 |
| Q871 | 1590001330 | S.TRA | DTA114EUA T106 | B | 234.6/18.8 |
| Q872 | 1530002060 | S.TRA | 2SC4081 T106 R | B | 231.2/19.5 |
| Q873 | 1530002841 | S.TRA | 2SC4116-Y(TE85RF) | B | 231.2/16.6 |
| Q874 | 1590000430 | S.TRA | DTC144EUA T106 | T | 195.7/57.4 |
| Q900 | 1590001330 | S.TRA | DTA114EUA T106 | B | 217.4/116.1 |
| Q901 | 1530003852 | S.TRA | 2SC5551A-F-TD-E | T | 210.3/113.5 |
| Q902 | 1590001330 | S.TRA | DTA114EUA T106 | T | 200.6/115.1 |
| Q903 | 1530003852 | S.TRA | 2SC5551A-F-TD-E | T | 189.4/113.5 |
| Q950 | 1590001330 | S.TRA | DTA114EUA T106 | B | 215.0/3.2 |
| Q951 | 1530003852 | S.TRA | 2SC5551A-F-TD-E | T | 209.8/17.6 |
| Q952 | 1590001330 | S.TRA | DTA114EUA T106 | B | 199.1/4.0 |
| Q953 | 1530003852 | S.TRA | 2SC5551A-F-TD-E | T | 188.6/17.6 |
| D1 | 1790001251 | S.DIO | MA2S1110GL | T | 184.0/75.2 |
| D21 | 1790001251 | S.DIO | MA2S1110GL | B | 167.1/77.7 |
| D51 | 1790001251 | S.DIO | MA2S1110GL | T | 163.7/68.6 |
| D81 | 1790001251 | S.DIO | MA2S1110GL | B | 141.6/68.2 |
| D111 | 1790001251 | S.DIO | MA2S1110GL | T | 107.4/67.6 |
| D141 | 1790001251 | S.DIO | MA2S1110GL | T | 94.7/70.3 |
| D171 | 1790001251 | S.DIO | MA2S1110GL | B | 81.6/74.3 |
| D201 | 1790001251 | S.DIO | MA2S1110GL | B | 70.2/73.2 |
| D231 | 1790001251 | S.DIO | MA2S1110GL | T | 49.4/69.2 |
| D261 | 1790001251 | S.DIO | MA2S1110GL | B | 35.4/70.1 |
| D291 | 1790001251 | S.DIO | MA2S1110GL | B | 204.0/72.0 |
| D321 | 1790001251 | S.DIO | MA2S1110GL | T | 204.1/97.5 |
| D351 | 1790001251 | S.DIO | MA2S1110GL | T | 189.1/95.0 |
| D352 | 1790001251 | S.DIO | MA2S1110GL | T | 189.1/88.7 |
| D353 | 1790001251 | S.DIO | MA2S1110GL | T | 189.1/82.5 |
| D354 | 1790001251 | S.DIO | MA2S1110GL | T | 189.1/76.3 |
| D355 | 1790001251 | S.DIO | MA2S1110GL | T | 194.0/66.3 |
| D371 | 1790001251 | S.DIO | MA2S1110GL | T | 218.5/70.0 |
| D373 | 1790001251 | S.DIO | MA2S1110GL | B | 239.8/116.1 |
| D391 | 1750000581 | S.DIO | 1SV307(TPH3F) | B | 233.2/50.0 |
| D392 | 1750000581 | S.DIO | 1SV307(TPH3F) | B | 236.0/52.9 |
| D393 | 1750000581 | S.DIO | 1SV307(TPH3F) | B | 235.3/63.7 |
| D401 | 1790001251 | S.DIO | MA2S1110GL | B | 225.6/95.6 |
| D402 | 1790000981 | S.DIO | MA3J7420GL | B | 234.0/113.3 |
| D501 | 1790001251 | S.DIO | MA2S1110GL | B | 184.1/45.6 |
| D531 | 1790001251 | S.DIO | MA2S1110GL | B | 167.7/53.7 |
| D561 | 1790001251 | S.DIO | MA2S1110GL | B | 164.5/42.5 |
| D591 | 1790001251 | S.DIO | MA2S1110GL | B | 144.1/53.4 |
| D621 | 1790001251 | S.DIO | MA2S1110GL | T | 107.6/52.6 |
| D651 | 1790001251 | S.DIO | MA2S1110GL | T | 94.9/49.6 |
| D681 | 1790001251 | S.DIO | MA2S1110GL | B | 81.5/45.7 |
| D711 | 1790001251 | S.DIO | MA2S1110GL | B | 70.0/44.4 |
| D741 | 1790001251 | S.DIO | MA2S1110GL | B | 51.4/50.5 |
| D771 | 1790001251 | S.DIO | MA2S1110GL | B | 36.5/43.8 |
| D801 | 1790001251 | S.DIO | MA2S1110GL | B | 203.8/47.4 |
| D831 | 1790001251 | S.DIO | MA2S1110GL | T | 203.7/22.1 |
| D851 | 1790001251 | S.DIO | MA2S1110GL | T | 189.1/27.9 |
| D852 | 1790001251 | S.DIO | MA2S1110GL | T | 189.1/33.1 |
| D853 | 1790001251 | S.DIO | MA2S1110GL | T | 189.1/39.3 |
| D854 | 1790001251 | S.DIO | MA2S1110GL | T | 189.1/45.5 |
| D855 | 1790001251 | S.DIO | MA2S1110GL | T | 194.0/52.8 |
| D871 | 1790001251 | S.DIO | MA2S1110GL | B | 241.4/18.0 |
| D872 | 1790000981 | S.DIO | MA3J7420GL | B | 247.7/15.6 |
| D873 | 1790001251 | S.DIO | MA2S1110GL | B | 243.1/94.1 |
| D900 | 1790001251 | S.DIO | MA2S1110GL | B | 218.9/100.5 |
| D901 | 1790001251 | S.DIO | MA2S1110GL | T | 207.9/100.7 |
| D902 | 1790001251 | S.DIO | MA2S1110GL | B | 197.0/100.2 |
| D903 | 1790001251 | S.DIO | MA2S1110GL | B | 186.4/100.5 |
| D950 | 1790001251 | S.DIO | MA2S1110GL | B | 212.3/3.9 |
| D951 | 1790001251 | S.DIO | MA2S1110GL | T | 204.4/4.5 |
| D952 | 1790001251 | S.DIO | MA2S1110GL | B | 195.7/4.9 |
| D953 | 1790001251 | S.DIO | MA2S1110GL | B | 182.6/5.3 |
| D954 | 1790001251 | S.DIO | MA2S1110GL | T | 235.4/16.3 |
| L1 | 6200005521 | S.COI | NLV25T-470J | B | 211.7/110.3 |
| L2 | 6200005521 | S.COI | NLV25T-470J | B | 222.2/110.3 |
| L3 | 6200010830 | S.COI | C2520C-3R3G-A | B | 204.7/110.3 |
| L4 | 6200010830 | S.COI | C2520C-3R3G-A | T | 218.7/109.6 |
| L5 | 6200010830 | S.COI | C2520C-3R3G-A | B | 225.7/110.3 |
| L6 | 6200010830 | S.COI | C2520C-3R3G-A | B | 215.2/110.3 |
| L23 | 6140004040 | COI | LR-443 | | |
| L24 | 6140004050 | COI | LR-444 | | |
| L25 | 6140004050 | COI | LR-444 | | |
| L26 | 6140004050 | COI | LR-444 | | |
| L27 | 6140004040 | COI | LR-443 | | |
| L52 | 6200005521 | S.COI | NLV25T-470J | T | 114.9/88.1 |
| L53 | 6140004060 | COI | LR-445 | | |
| L54 | 6140004080 | COI | LR-446 | | |
| L55 | 6140004080 | COI | LR-446 | | |
| L56 | 6140004080 | COI | LR-446 | | |
| L57 | 6140004060 | COI | LR-445 | | |
| L83 | 6140004090 | COI | LR-447 | | |

Eqv.= This component is equivalent to the REF No. component listed above, and may be substituted on parts orders and repairs.

M.=Mounted side (T: Mounted on the Top side, B: Mounted on the Bottom side)
S.=Surface mount

## [BPF UNIT]

| REF NO. | PARTS NO. | DESCRIPTION | M. | H/V LOCATION |
|---|---|---|---|---|
| L84 | 6140004230 | COI LR-458 | | |
| L85 | 6140004230 | COI LR-458 | | |
| L86 | 6140004230 | COI LR-458 | | |
| L87 | 6140004090 | COI LR-447 | | |
| L112 | 6200005521 | S.COI NLV25T-470J | B | 114.5/109.1 |
| L113 | 6140004090 | COI LR-447 | | |
| L114 | 6140004100 | COI LR-448 | | |
| L115 | 6140004100 | COI LR-448 | | |
| L116 | 6140004100 | COI LR-448 | | |
| L117 | 6140004090 | COI LR-447 | | |
| L141 | 6200005521 | S.COI NLV25T-470J | B | 106.9/111.5 |
| L142 | 6200005521 | S.COI NLV25T-470J | B | 100.4/107.7 |
| L143 | 6140004110 | COI LR-449 | | |
| L144 | 6140004120 | COI LR-450 | | |
| L145 | 6140004120 | COI LR-450 | | |
| L146 | 6140004120 | COI LR-450 | | |
| L147 | 6140004110 | COI LR-449 | | |
| L171 | 6200005521 | S.COI NLV25T-470J | B | 85.0/117.0 |
| L172 | 6200005521 | S.COI NLV25T-470J | B | 81.8/115.5 |
| L173 | 6140004140 | COI LR-451 | | |
| L174 | 6140004150 | COI LR-452 | | |
| L175 | 6140004150 | COI LR-452 | | |
| L176 | 6140004150 | COI LR-452 | | |
| L177 | 6140004140 | COI LR-451 | | |
| L201 | 6200007021 | S.COI NLV25T-270J | T | 22.2/45.0 |
| L203 | 6140004160 | COI LR-453 | | |
| L204 | 6140004180 | COI LR-454 | | |
| L205 | 6140004180 | COI LR-454 | | |
| L206 | 6140004180 | COI LR-454 | | |
| L207 | 6140004160 | COI LR-453 | | |
| L231 | 6200005011 | S.COI NLV25T-100J | B | 44.3/117.0 |
| L232 | 6200005011 | S.COI NLV25T-100J | B | 44.2/114.3 |
| L233 | 6140004190 | COI LR-455 | | |
| L234 | 6140004210 | COI LR-456 | | |
| L235 | 6140004210 | COI LR-456 | | |
| L236 | 6140004210 | COI LR-456 | | |
| L237 | 6140004190 | COI LR-455 | | |
| L261 | 6200009141 | S.COI NLV25T-6R8J | B | 27.4/111.4 |
| L262 | 6200009141 | S.COI NLV25T-6R8J | B | 24.9/109.7 |
| L263 | 6140004220 | COI LR-457 | | |
| L264 | 6140004160 | COI LR-453 | | |
| L265 | 6140004160 | COI LR-453 | | |
| L266 | 6140004160 | COI LR-453 | | |
| L267 | 6140004220 | COI LR-457 | | |
| L291 | 6200003281 | S.COI NLV25T-2R2J | B | 222.9/74.2 |
| L292 | 6200003281 | S.COI NLV25T-2R2J | B | 214.1/75.2 |
| L293 | 6200008090 | S.COI LQW2BHN68NJ03L | T | 214.7/79.7 |
| L294 | 6200003041 | S.COI NLV32T-R68J | T | 213.6/82.7 |
| L295 | 6200008090 | S.COI LQW2BHN68NJ03L | T | 210.1/79.7 |
| L296 | 6200010870 | S.COI C2520C-R33G-A (0.33U) | T | 210.0/76.6 |
| L321 | 6200003281 | S.COI NLV25T-2R2J | B | 209.6/93.5 |
| L322 | 6200003281 | S.COI NLV25T-2R2J | B | 213.3/95.4 |
| L323 | 6200003011 | S.COI NLV32T-R27J | T | 214.2/91.1 |
| L324 | 6200003001 | S.COI NLV32T-R22J | T | 209.8/87.2 |
| L325 | 6200003011 | S.COI NLV32T-R27J | T | 209.6/93.2 |
| L371 | 6140004390 | COI LR-459 | | |
| L372 | 6140004390 | COI LR-459 | | |
| L373 | 6140003530 | COI LR-395 | | |
| L391 | 6200005491 | S.COI NLV32T-331J | T | 230.2/48.4 |
| L392 | 6200005491 | S.COI NLV32T-331J | T | 231.7/64.0 |
| L393 | 6200003211 | S.COI NLV32T-820J | B | 231.8/42.8 |
| L394 | 6200005491 | S.COI NLV32T-331J | B | 236.3/46.6 |
| L395 | 6200005491 | S.COI NLV32T-331J | B | 225.6/48.3 |
| L501 | 6200005521 | S.COI NLV25T-470J | B | 183.7/36.2 |
| L502 | 6200005521 | S.COI NLV25T-470J | B | 184.6/41.0 |
| L504 | 6200010830 | S.COI C2520C-3R3G-A | T | 178.7/33.2 |
| L505 | 6200010830 | S.COI C2520C-3R3G-A | T | 177.8/41.5 |
| L506 | 6200010830 | S.COI C2520C-3R3G-A | T | 179.0/37.7 |
| L507 | 6200010830 | S.COI C2520C-3R3G-A | T | 179.2/45.1 |
| L531 | 6200005521 | S.COI NLV25T-470J | B | 167.5/13.0 |
| L532 | 6200005521 | S.COI NLV25T-470J | B | 170.5/13.0 |
| L533 | 6140004040 | COI LR-443 | | |
| L534 | 6140004050 | COI LR-444 | | |
| L535 | 6140004050 | COI LR-444 | | |
| L536 | 6140004050 | COI LR-444 | | |
| L537 | 6140004040 | COI LR-443 | | |
| L561 | 6200005521 | S.COI NLV25T-470J | B | 150.0/12.4 |
| L562 | 6200005521 | S.COI NLV25T-470J | B | 153.9/16.6 |
| L563 | 6140004060 | COI LR-445 | | |
| L564 | 6140004080 | COI LR-446 | | |
| L565 | 6140004080 | COI LR-446 | | |
| L566 | 6140004080 | COI LR-446 | | |
| L567 | 6140004060 | COI LR-445 | | |
| L591 | 6200005521 | S.COI NLV25T-470J | B | 139.9/9.3 |
| L592 | 6200005521 | S.COI NLV25T-470J | B | 142.7/9.2 |
| L593 | 6140004090 | COI LR-447 | | |
| L594 | 6140004230 | COI LR-458 | | |
| L595 | 6140004230 | COI LR-458 | | |
| L596 | 6140004230 | COI LR-458 | | |
| L597 | 6140004090 | COI LR-447 | | |
| L621 | 6200005521 | S.COI NLV25T-470J | B | 116.8/9.5 |
| L622 | 6200005521 | S.COI NLV25T-470J | B | 122.4/6.4 |
| L623 | 6140004090 | COI LR-447 | | |
| L624 | 6140004100 | COI LR-448 | | |
| L625 | 6140004100 | COI LR-448 | | |
| L626 | 6140004100 | COI LR-448 | | |
| L627 | 6140004090 | COI LR-447 | | |
| L651 | 6200005521 | S.COI NLV25T-470J | T | 15.6/176.3 |
| L653 | 6140004110 | COI LR-449 | | |
| L654 | 6140004120 | COI LR-450 | | |
| L655 | 6140004120 | COI LR-450 | | |
| L656 | 6140004120 | COI LR-450 | | |
| L657 | 6140004110 | COI LR-449 | | |
| L681 | 6200005521 | S.COI NLV25T-470J | T | 37.4/176.2 |
| L682 | 6200005521 | S.COI NLV25T-470J | T | 37.8/172.6 |

## [BPF UNIT]

| REF NO. | PARTS NO. | DESCRIPTION | M. | H/V LOCATION |
|---|---|---|---|---|
| L683 | 6140004140 | COI LR-451 | | |
| L684 | 6140004150 | COI LR-452 | | |
| L685 | 6140004150 | COI LR-452 | | |
| L686 | 6140004150 | COI LR-452 | | |
| L687 | 6140004140 | COI LR-451 | | |
| L711 | 6200007021 | S.COI NLV25T-270J | B | 56.5/10.8 |
| L712 | 6200007021 | S.COI NLV25T-270J | B | 61.2/8.8 |
| L713 | 6140004160 | COI LR-453 | | |
| L714 | 6140004180 | COI LR-454 | | |
| L715 | 6140004180 | COI LR-454 | | |
| L716 | 6140004180 | COI LR-454 | | |
| L717 | 6140004160 | COI LR-453 | | |
| L741 | 6200005011 | S.COI NLV25T-100J | B | 44.2/6.2 |
| L742 | 6200005011 | S.COI NLV25T-100J | B | 46.3/3.4 |
| L743 | 6140004190 | COI LR-455 | | |
| L744 | 6140004210 | COI LR-456 | | |
| L745 | 6140004210 | COI LR-456 | | |
| L746 | 6140004210 | COI LR-456 | | |
| L747 | 6140004190 | COI LR-455 | | |
| L771 | 6200009141 | S.COI NLV25T-6R8J | B | 23.4/10.7 |
| L772 | 6200009141 | S.COI NLV25T-6R8J | B | 27.1/9.0 |
| L773 | 6140004220 | COI LR-457 | | |
| L774 | 6140004160 | COI LR-453 | | |
| L775 | 6140004160 | COI LR-453 | | |
| L776 | 6140004160 | COI LR-453 | | |
| L777 | 6140004220 | COI LR-457 | | |
| L801 | 6200003281 | S.COI NLV25T-2R2J | B | 214.4/45.7 |
| L802 | 6200003281 | S.COI NLV25T-2R2J | B | 211.8/42.4 |
| L805 | 6200008090 | S.COI LQW2BHN68NJ03L | T | 214.6/41.4 |
| L806 | 6200003041 | S.COI NLV32T-R68J | T | 211.6/37.0 |
| L807 | 6200008090 | S.COI LQW2BHN68NJ03L | T | 209.7/40.1 |
| L808 | 6200010870 | S.COI C2520C-R33G-A (0.33U) | T | 209.8/43.1 |
| L831 | 6200003281 | S.COI NLV25T-2R2J | B | 211.6/26.7 |
| L832 | 6200003281 | S.COI NLV25T-2R2J | B | 213.2/23.7 |
| L833 | 6200003011 | S.COI NLV32T-R27J | T | 214.2/29.7 |
| L834 | 6200003001 | S.COI NLV32T-R22J | T | 209.7/32.9 |
| L835 | 6200003011 | S.COI NLV32T-R27J | T | 209.4/27.3 |
| L900 | 6200001831 | S.COI NLV32T-100J | B | 213.2/113.1 |
| L901 | 6200003950 | S.COI HF50ACC 322513-T | B | 11.6/20.4 |
| L902 | 6200003950 | S.COI HF50ACC 322513-T | B | 11.7/16.4 |
| L903 | 6200001831 | S.COI NLV32T-100J | T | 7.4/27.5 |
| L904 | 6200001831 | S.COI NLV32T-100J | T | 11.6/27.5 |
| L905 | 6140004380 | COI LR-498 | | |
| L906 | 6200009690 | S.COI LQH43CN101K03L | T | 216.9/114.5 |
| L907 | 6200001831 | S.COI NLV32T-100J | B | 193.1/113.1 |
| L908 | 6140004380 | COI LR-498 | | |
| L909 | 6200009690 | S.COI LQH43CN101K03L | T | 196.0/115.1 |
| L950 | 6200001831 | S.COI NLV32T-100J | B | 211.8/17.0 |
| L951 | 6140004380 | COI LR-498 | | |
| L952 | 6200009690 | S.COI LQH43CN101K03L | T | 213.8/3.4 |
| L953 | 6200001831 | S.COI NLV32T-100J | B | 191.1/17.0 |
| L954 | 6140004380 | COI LR-498 | | |
| L955 | 6200009690 | S.COI LQH43CN101K03L | T | 196.0/3.3 |
| R1 | 7030003640 | S.RES ERJ3GEYJ 473 V (47K) | T | 181.4/92.2 |
| R3 | 7030003860 | S.RES ERJ3GE JPW V | T | 182.1/90.3 |
| R101 | 7030003320 | S.RES ERJ3GEYJ 101 V (100) | T | 7.2/67.9 |
| R102 | 7030003320 | S.RES ERJ3GEYJ 101 V (100) | T | 8.0/71.3 |
| R103 | 7030003320 | S.RES ERJ3GEYJ 101 V (100) | T | 8.8/67.9 |
| R104 | 7030003320 | S.RES ERJ3GEYJ 101 V (100) | T | 9.4/71.0 |
| R105 | 7030003320 | S.RES ERJ3GEYJ 101 V (100) | T | 10.7/71.0 |
| R106 | 7030003320 | S.RES ERJ3GEYJ 101 V (100) | T | 11.3/90.0 |
| R107 | 7030003320 | S.RES ERJ3GEYJ 101 V (100) | T | 11.6/87.9 |
| R108 | 7030003320 | S.RES ERJ3GEYJ 101 V (100) | T | 11.2/83.2 |
| R117 | 7030003320 | S.RES ERJ3GEYJ 101 V (100) | T | 9.9/83.5 |
| R118 | 7030003320 | S.RES ERJ3GEYJ 101 V (100) | T | 8.6/83.5 |
| R119 | 7030003320 | S.RES ERJ3GEYJ 101 V (100) | T | 7.4/87.2 |
| R120 | 7030003320 | S.RES ERJ3GEYJ 101 V (100) | T | 6.7/83.2 |
| R121 | 7030003320 | S.RES ERJ3GEYJ 101 V (100) | T | 6.9/92.2 |
| R122 | 7030003320 | S.RES ERJ3GEYJ 101 V (100) | T | 7.1/94.8 |
| R123 | 7030003320 | S.RES ERJ3GEYJ 101 V (100) | B | 10.0/95.5 |
| R124 | 7030003320 | S.RES ERJ3GEYJ 101 V (100) | T | 11.0/94.3 |
| R133 | 7030003560 | S.RES ERJ3GEYJ 103 V (10K) | T | 191.2/55.8 |
| R134 | 7030003320 | S.RES ERJ3GEYJ 101 V (100) | B | 10.0/98.9 |
| R141 | 7030003360 | S.RES ERJ3GEYJ 221 V (220) | B | 5.6/14.0 |
| R142 | 7030003360 | S.RES ERJ3GEYJ 221 V (220) | B | 5.6/15.7 |
| R143 | 7030003360 | S.RES ERJ3GEYJ 221 V (220) | B | 5.1/19.2 |
| R351 | 7030003340 | S.RES ERJ3GEYJ 151 V (150) | B | 197.7/90.7 |
| R352 | 7030003300 | S.RES ERJ3GEYJ 680 V (68) | B | 193.9/87.6 |
| R354 | 7030003280 | S.RES ERJ3GEYJ 470 V (47) | B | 201.0/84.8 |
| R355 | 7030003320 | S.RES ERJ3GEYJ 101 V (100) | B | 193.9/81.4 |
| R357 | 7030003240 | S.RES ERJ3GEYJ 220 V (22) | B | 197.9/71.6 |
| R358 | 7030003350 | S.RES ERJ3GEYJ 181 V (180) | B | 194.5/70.4 |
| R360 | 7030003320 | S.RES ERJ3GEYJ 101 V (100) | T | 191.8/66.1 |
| R371 | 7030003320 | S.RES ERJ3GEYJ 101 V (100) | T | 217.5/71.3 |
| R372 | 7030003320 | S.RES ERJ3GEYJ 101 V (100) | B | 209.6/62.0 |
| R373 | 7030003320 | S.RES ERJ3GEYJ 101 V (100) | B | 209.6/59.0 |
| R381 | 7030003520 | S.RES ERJ3GEYJ 472 V (4.7K) | T | 231.4/51.9 |
| R382 | 7030003360 | S.RES ERJ3GEYJ 221 V (220) | B | 239.9/112.7 |
| R383 | 7030003680 | S.RES ERJ3GEYJ 104 V (100K) | T | 232.4/49.1 |
| R384 | 7030003420 | S.RES ERJ3GEYJ 681 V (680) | B | 236.1/50.0 |
| R385 | 7030003420 | S.RES ERJ3GEYJ 681 V (680) | B | 231.4/46.7 |
| R386 | 7030003480 | S.RES ERJ3GEYJ 222 V (2.2K) | B | 237.6/62.7 |
| R387 | 7030003560 | S.RES ERJ3GEYJ 103 V (10K) | B | 238.8/55.5 |
| R388 | 7540000130 | ABS 2P-50A-301 | | |
| R389 | 7030003420 | S.RES ERJ3GEYJ 681 V (680) | T | 235.0/65.4 |
| R390 | 7030003560 | S.RES ERJ3GEYJ 103 V (10K) | T | 233.0/51.9 |
| R391 | 7030003680 | S.RES ERJ3GEYJ 104 V (100K) | T | 234.3/51.9 |
| R392 | 7030003420 | S.RES ERJ3GEYJ 681 V (680) | B | 234.8/50.0 |
| R393 | 7030003420 | S.RES ERJ3GEYJ 681 V (680) | B | 231.4/48.0 |
| R394 | 7030003420 | S.RES ERJ3GEYJ 681 V (680) | T | 235.0/64.1 |
| R395 | 7030003420 | S.RES ERJ3GEYJ 681 V (680) | B | 235.3/56.4 |

Eqv.= This component is equivalent to the REF No. component listed above, and may be substituted on parts orders and repairs.

M.=Mounted side (T: Mounted on the Top side, B: Mounted on the Bottom side)
S.=Surface mount

## [BPF UNIT]

| REF NO. | PARTS NO. | DESCRIPTION | M. | H/V LOCATION |
|---|---|---|---|---|
| R396 | 7030003420 | S.RES ERJ3GEYJ 681 V (680) | B | 235.3/55.1 |
| R401 | 7030003360 | S.RES ERJ3GEYJ 221 V (220) | B | 227.7/96.3 |
| R402 | 7030003680 | S.RES ERJ3GEYJ 104 V (100K) | T | 234.6/111.6 |
| R403 | 7030003480 | S.RES ERJ3GEYJ 222 V (2.2K) | T | 232.0/110.3 |
| R404 | 7030003860 | S.RES ERJ3GE JPW V | T | 234.6/110.3 |
| R441 | 7030003360 | S.RES ERJ3GEYJ 221 V (220) | B | 11.0/24.4 |
| R442 | 7030003360 | S.RES ERJ3GEYJ 221 V (220) | B | 8.2/23.4 |
| R451 | 7030003320 | S.RES ERJ3GEYJ 101 V (100) | T | 10.6/32.9 |
| R452 | 7030003320 | S.RES ERJ3GEYJ 101 V (100) | T | 11.9/33.2 |
| R453 | 7030003320 | S.RES ERJ3GEYJ 101 V (100) | T | 13.2/33.2 |
| R454 | 7030003320 | S.RES ERJ3GEYJ 101 V (100) | T | 14.5/33.2 |
| R455 | 7030003320 | S.RES ERJ3GEYJ 101 V (100) | T | 14.5/36.9 |
| R456 | 7030003320 | S.RES ERJ3GEYJ 101 V (100) | T | 11.1/46.9 |
| R457 | 7030003320 | S.RES ERJ3GEYJ 101 V (100) | T | 8.9/46.3 |
| R458 | 7030003320 | S.RES ERJ3GEYJ 101 V (100) | T | 8.9/47.6 |
| R467 | 7030003320 | S.RES ERJ3GEYJ 101 V (100) | T | 10.6/49.6 |
| R468 | 7030003320 | S.RES ERJ3GEYJ 101 V (100) | T | 13.6/50.2 |
| R469 | 7030003320 | S.RES ERJ3GEYJ 101 V (100) | T | 7.6/49.4 |
| R470 | 7030003320 | S.RES ERJ3GEYJ 101 V (100) | T | 6.9/50.7 |
| R471 | 7030003320 | S.RES ERJ3GEYJ 101 V (100) | T | 6.2/52.6 |
| R472 | 7030003320 | S.RES ERJ3GEYJ 101 V (100) | T | 9.2/53.0 |
| R473 | 7030003320 | S.RES ERJ3GEYJ 101 V (100) | T | 10.5/53.7 |
| R474 | 7030003320 | S.RES ERJ3GEYJ 101 V (100) | T | 11.8/54.2 |
| R475 | 7030003320 | S.RES ERJ3GEYJ 101 V (100) | T | 10.7/64.0 |
| R481 | 7030003560 | S.RES ERJ3GEYJ 103 V (10K) | B | 196.9/55.9 |
| R501 | 7030003640 | S.RES ERJ3GEYJ 473 V (47K) | T | 183.0/30.0 |
| R503 | 7030003860 | S.RES ERJ3GE JPW V | T | 182.2/31.9 |
| R851 | 7030003340 | S.RES ERJ3GEYJ 151 V (150) | B | 198.2/32.2 |
| R852 | 7030003300 | S.RES ERJ3GEYJ 680 V (68) | B | 193.5/32.1 |
| R854 | 7030003280 | S.RES ERJ3GEYJ 470 V (47) | B | 200.9/34.7 |
| R855 | 7030003320 | S.RES ERJ3GEYJ 101 V (100) | B | 193.5/38.3 |
| R857 | 7030003240 | S.RES ERJ3GEYJ 220 V (22) | B | 197.9/48.2 |
| R858 | 7030003350 | S.RES ERJ3GEYJ 181 V (180) | B | 193.8/49.7 |
| R860 | 7030003320 | S.RES ERJ3GEYJ 101 V (100) | T | 192.0/51.0 |
| R871 | 7030003360 | S.RES ERJ3GEYJ 221 V (220) | B | 238.0/19.5 |
| R872 | 7030003680 | S.RES ERJ3GEYJ 104 V (100K) | B | 236.5/14.4 |
| R873 | 7030003480 | S.RES ERJ3GEYJ 222 V (2.2K) | B | 239.6/16.0 |
| R874 | 7030003860 | S.RES ERJ3GE JPW V | B | 236.5/16.0 |
| R900 | 7030003280 | S.RES ERJ3GEYJ 470 V (47) | B | 212.8/117.1 |
| R901 | 7030003440 | S.RES ERJ3GEYJ 102 V (1K) | T | 207.2/117.4 |
| R902 | 7030003530 | S.RES ERJ3GEYJ 562 V (5.6K) | T | 210.4/116.7 |
| R903 | 7030003380 | S.RES ERJ3GEYJ 331 V (330) | B | 203.9/113.3 |
| R904 | 7030003220 | S.RES ERJ3GEYJ 150 V (15) | B | 206.3/111.6 |
| R905 | 7030003380 | S.RES ERJ3GEYJ 331 V (330) | B | 203.3/111.8 |
| R906 | 7030003320 | S.RES ERJ3GEYJ 101 V (100) | T | 12.5/92.9 |
| R907 | 7030003320 | S.RES ERJ3GEYJ 101 V (100) | T | 13.8/92.9 |
| R908 | 7030003280 | S.RES ERJ3GEYJ 470 V (47) | B | 194.5/116.4 |
| R909 | 7030003440 | S.RES ERJ3GEYJ 102 V (1K) | T | 185.4/115.9 |
| R910 | 7030003530 | S.RES ERJ3GEYJ 562 V (5.6K) | T | 189.6/116.7 |
| R911 | 7030003320 | S.RES ERJ3GEYJ 101 V (100) | B | 209.4/110.8 |
| R912 | 7030003320 | S.RES ERJ3GEYJ 101 V (100) | B | 187.5/111.2 |
| R913 | 7030004050 | S.RES ERJ3GEYJ 1R0 V (1) | B | 189.8/106.1 |
| R950 | 7030003280 | S.RES ERJ3GEYJ 470 V (47) | B | 210.2/20.0 |
| R951 | 7030003440 | S.RES ERJ3GEYJ 102 V (1K) | T | 207.7/21.4 |
| R952 | 7030003530 | S.RES ERJ3GEYJ 562 V (5.6K) | T | 211.0/20.8 |
| R953 | 7030003380 | S.RES ERJ3GEYJ 331 V (330) | B | 203.4/18.4 |
| R954 | 7030003220 | S.RES ERJ3GEYJ 150 V (15) | B | 205.6/16.7 |
| R955 | 7030003380 | S.RES ERJ3GEYJ 331 V (330) | B | 202.8/16.7 |
| R956 | 7030003320 | S.RES ERJ3GEYJ 101 V (100) | T | 8.3/65.0 |
| R957 | 7030003320 | S.RES ERJ3GEYJ 101 V (100) | B | 11.6/60.5 |
| R958 | 7030003280 | S.RES ERJ3GEYJ 470 V (47) | B | 189.5/19.9 |
| R959 | 7030003440 | S.RES ERJ3GEYJ 102 V (1K) | T | 186.5/21.4 |
| R960 | 7030003530 | S.RES ERJ3GEYJ 562 V (5.6K) | T | 191.5/20.0 |
| R961 | 7030003320 | S.RES ERJ3GEYJ 101 V (100) | B | 208.3/16.4 |
| R962 | 7030003320 | S.RES ERJ3GEYJ 101 V (100) | B | 187.7/16.4 |
| R963 | 7030004050 | S.RES ERJ3GEYJ 1R0 V (1) | B | 181.5/16.6 |
| | | | | |
| C1 | 4030006880 | S.CER C1608 JB 1H 472K-T | B | 183.4/92.3 |
| C2 | 4030006880 | S.CER C1608 JB 1H 472K-T | T | 185.3/91.6 |
| C3 | 4030006880 | S.CER C1608 JB 1H 472K-T | T | 184.1/99.8 |
| C4 | 4030006880 | S.CER C1608 JB 1H 472K-T | B | 183.1/73.9 |
| C5 | 4030006880 | S.CER C1608 JB 1H 472K-T | B | 182.5/66.5 |
| C6 | 4030006880 | S.CER C1608 JB 1H 472K-T | T | 183.9/73.9 |
| C7 | 4030017840 | S.CER C2012 CH 1H 222J-T | T | 182.8/86.5 |
| C8 | 4030017850 | S.CER C2012 CH 1H 272J-T | T | 182.9/84.1 |
| C9 | 4030017820 | S.CER C2012 CH 1H 122J-T | T | 182.9/82.4 |
| C10 | 4030017840 | S.CER C2012 CH 1H 222J-T | T | 182.8/77.6 |
| C21 | 4030006880 | S.CER C1608 JB 1H 472K-T | B | 165.3/112.3 |
| C22 | 4030006880 | S.CER C1608 JB 1H 472K-T | B | 162.3/112.2 |
| C23 | 4030006880 | S.CER C1608 JB 1H 472K-T | B | 166.8/110.5 |
| C24 | 4030006880 | S.CER C1608 JB 1H 472K-T | T | 163.8/81.5 |
| C25 | 4030006880 | S.CER C1608 JB 1H 472K-T | B | 171.5/76.9 |
| C26 | 4030006880 | S.CER C1608 JB 1H 472K-T | B | 168.9/77.7 |
| C27 | 4030017810 | S.CER C1608 CH 1H 102J-T | B | 162.6/104.4 |
| C28 | 4030017810 | S.CER C1608 CH 1H 102J-T | B | 162.6/102.5 |
| C29 | 4030010760 | S.CER C1608 CH 1H 331J-T | B | 168.7/98.0 |
| C30 | 4030007140 | S.CER C1608 CH 1H 121J-T | B | 168.7/96.2 |
| C31 | 4030007160 | S.CER C1608 CH 1H 181J-T | B | 164.2/94.0 |
| C32 | 4030007060 | S.CER C1608 CH 1H 270J-T | B | 166.2/94.0 |
| C33 | 4030010760 | S.CER C1608 CH 1H 331J-T | B | 168.7/93.2 |
| C34 | 4030007090 | S.CER C1608 CH 1H 470J-T | B | 168.8/90.8 |
| C35 | 4030007160 | S.CER C1608 CH 1H 181J-T | B | 164.3/89.4 |
| C36 | 4030007060 | S.CER C1608 CH 1H 270J-T | B | 164.2/91.1 |
| C38 | 4030010760 | S.CER C1608 CH 1H 331J-T | B | 165.7/83.4 |
| C39 | 4030007140 | S.CER C1608 CH 1H 121J-T | B | 165.7/85.5 |
| C40 | 4030017810 | S.CER C1608 CH 1H 102J-T | B | 170.0/74.5 |
| C41 | 4030017810 | S.CER C1608 CH 1H 102J-T | B | 170.0/72.7 |
| C51 | 4030006880 | S.CER C1608 JB 1H 472K-T | T | 153.8/116.1 |
| C52 | 4030006880 | S.CER C1608 JB 1H 472K-T | B | 150.6/112.3 |
| C53 | 4030006880 | S.CER C1608 JB 1H 472K-T | B | 153.8/116.1 |
| C54 | 4030006880 | S.CER C1608 JB 1H 472K-T | B | 160.3/72.0 |
| C55 | 4030006880 | S.CER C1608 JB 1H 472K-T | B | 160.3/65.2 |
| C56 | 4030006880 | S.CER C1608 JB 1H 472K-T | T | 165.1/68.6 |
| C57 | 4030017800 | S.CER C1608 CH 1H 561J-T | B | 143.6/99.4 |

## [BPF UNIT]

| REF NO. | PARTS NO. | DESCRIPTION | M. | H/V LOCATION |
|---|---|---|---|---|
| C58 | 4030010760 | S.CER C1608 CH 1H 331J-T | B | 143.6/97.2 |
| C59 | 4030010760 | S.CER C1608 CH 1H 331J-T | B | 144.2/94.6 |
| C60 | 4030007080 | S.CER C1608 CH 1H 390J-T | B | 144.2/92.3 |
| C61 | 4030007100 | S.CER C1608 CH 1H 560J-T | B | 141.9/90.3 |
| C62 | 4030010760 | S.CER C1608 CH 1H 331J-T | B | 139.5/90.3 |
| C63 | 4030010760 | S.CER C1608 CH 1H 331J-T | B | 143.8/83.0 |
| C64 | 4030007090 | S.CER C1608 CH 1H 470J-T | B | 143.8/85.4 |
| C65 | 4030010760 | S.CER C1608 CH 1H 331J-T | B | 141.2/82.0 |
| C66 | 4030007100 | S.CER C1608 CH 1H 560J-T | B | 138.9/82.0 |
| C67 | 4030010760 | S.CER C1608 CH 1H 331J-T | B | 143.8/78.7 |
| C68 | 4030007080 | S.CER C1608 CH 1H 390J-T | B | 143.8/81.1 |
| C69 | 4030017800 | S.CER C1608 CH 1H 561J-T | B | 144.0/75.2 |
| C70 | 4030010760 | S.CER C1608 CH 1H 331J-T | B | 144.0/77.1 |
| C81 | 4030006880 | S.CER C1608 JB 1H 472K-T | B | 140.0/115.1 |
| C82 | 4030006880 | S.CER C1608 JB 1H 472K-T | B | 138.1/111.8 |
| C83 | 4030006880 | S.CER C1608 JB 1H 472K-T | B | 140.8/117.0 |
| C84 | 4030006880 | S.CER C1608 JB 1H 472K-T | B | 138.5/72.1 |
| C85 | 4030006880 | S.CER C1608 JB 1H 472K-T | B | 145.0/66.6 |
| C86 | 4030006880 | S.CER C1608 JB 1H 472K-T | B | 143.0/68.2 |
| C87 | 4030017800 | S.CER C1608 CH 1H 561J-T | B | 126.8/116.7 |
| C88 | 4030011330 | S.CER C1608 CH 1H 391J-T | B | 126.8/114.8 |
| C89 | 4030007160 | S.CER C1608 CH 1H 181J-T | B | 126.9/104.4 |
| C90 | 4030007070 | S.CER C1608 CH 1H 330J-T | B | 126.9/106.2 |
| C91 | 4030007030 | S.CER C1608 CH 1H 150J-T | B | 130.8/102.2 |
| C92 | 4030007120 | S.CER C1608 CH 1H 820J-T | B | 128.9/102.2 |
| C93 | 4030007140 | S.CER C1608 CH 1H 121J-T | B | 126.7/101.4 |
| C94 | 4030007100 | S.CER C1608 CH 1H 560J-T | B | 126.7/99.6 |
| C95 | 4030007120 | S.CER C1608 CH 1H 820J-T | B | 129.5/92.5 |
| C96 | 4030007030 | S.CER C1608 CH 1H 150J-T | B | 131.4/92.5 |
| C97 | 4030007160 | S.CER C1608 CH 1H 181J-T | B | 126.8/89.7 |
| C98 | 4030007070 | S.CER C1608 CH 1H 330J-T | B | 126.8/88.1 |
| C99 | 4030017800 | S.CER C1608 CH 1H 561J-T | B | 126.8/86.1 |
| C100 | 4030011330 | S.CER C1608 CH 1H 391J-T | B | 126.8/84.3 |
| C111 | 4030006880 | S.CER C1608 JB 1H 472K-T | B | 118.1/115.3 |
| C112 | 4030006880 | S.CER C1608 JB 1H 472K-T | B | 115.3/112.5 |
| C113 | 4030006880 | S.CER C1608 JB 1H 472K-T | B | 118.9/117.7 |
| C114 | 4030006880 | S.CER C1608 JB 1H 472K-T | B | 107.7/69.4 |
| C115 | 4030006880 | S.CER C1608 JB 1H 472K-T | B | 104.3/65.9 |
| C116 | 4030006880 | S.CER C1608 JB 1H 472K-T | T | 108.7/67.5 |
| C117 | 4030010760 | S.CER C1608 CH 1H 331J-T | B | 110.4/109.4 |
| C118 | 4030007150 | S.CER C1608 CH 1H 151J-T | B | 110.4/107.8 |
| C119 | 4030007150 | S.CER C1608 CH 1H 151J-T | B | 110.4/96.7 |
| C120 | 4030007060 | S.CER C1608 CH 1H 270J-T | B | 110.4/98.3 |
| C121 | 4030007060 | S.CER C1608 CH 1H 270J-T | B | 106.9/95.1 |
| C122 | 4030007140 | S.CER C1608 CH 1H 121J-T | B | 105.2/95.1 |
| C123 | 4030007150 | S.CER C1608 CH 1H 151J-T | B | 110.4/94.3 |
| C124 | 4030007010 | S.CER C1608 CH 1H 100D-T | B | 110.4/92.8 |
| C125 | 4030007140 | S.CER C1608 CH 1H 121J-T | B | 109.6/84.5 |
| C126 | 4030007060 | S.CER C1608 CH 1H 270J-T | B | 107.6/84.5 |
| C127 | 4030007150 | S.CER C1608 CH 1H 151J-T | B | 110.4/80.6 |
| C128 | 4030007060 | S.CER C1608 CH 1H 270J-T | B | 110.4/78.7 |
| C129 | 4030010760 | S.CER C1608 CH 1H 331J-T | B | 110.4/73.7 |
| C130 | 4030007150 | S.CER C1608 CH 1H 151J-T | B | 110.4/72.1 |
| C141 | 4030006880 | S.CER C1608 JB 1H 472K-T | B | 105.3/115.3 |
| C142 | 4030006880 | S.CER C1608 JB 1H 472K-T | B | 97.2/108.7 |
| C143 | 4030006880 | S.CER C1608 JB 1H 472K-T | B | 105.6/117.7 |
| C144 | 4030006880 | S.CER C1608 JB 1H 472K-T | B | 91.0/72.9 |
| C145 | 4030006880 | S.CER C1608 JB 1H 472K-T | B | 90.2/65.9 |
| C146 | 4030006880 | S.CER C1608 JB 1H 472K-T | T | 93.4/70.3 |
| C147 | 4030007170 | S.CER C1608 CH 1H 221J-T | B | 92.4/109.9 |
| C148 | 4030007170 | S.CER C1608 CH 1H 221J-T | B | 92.4/108.0 |
| C149 | 4030007130 | S.CER C1608 CH 1H 101J-T | B | 92.5/104.6 |
| C150 | 4030007050 | S.CER C1608 CH 1H 220J-T | B | 92.5/102.6 |
| C151 | 4030007070 | S.CER C1608 CH 1H 330J-T | B | 93.1/100.0 |
| C152 | 4030007080 | S.CER C1608 CH 1H 390J-T | B | 94.8/100.0 |
| C153 | 4030007120 | S.CER C1608 CH 1H 820J-T | B | 92.4/94.8 |
| C154 | 4030007050 | S.CER C1608 CH 1H 220J-T | B | 92.4/93.3 |
| C155 | 4030007080 | S.CER C1608 CH 1H 390J-T | B | 95.5/92.6 |
| C156 | 4030007070 | S.CER C1608 CH 1H 330J-T | B | 97.8/92.6 |
| C157 | 4030007130 | S.CER C1608 CH 1H 101J-T | B | 92.5/90.8 |
| C158 | 4030007050 | S.CER C1608 CH 1H 220J-T | B | 92.5/89.2 |
| C159 | 4030007170 | S.CER C1608 CH 1H 221J-T | B | 92.4/79.9 |
| C160 | 4030007170 | S.CER C1608 CH 1H 221J-T | B | 92.4/77.9 |
| C171 | 4030006880 | S.CER C1608 JB 1H 472K-T | B | 74.0/115.3 |
| C172 | 4030006880 | S.CER C1608 JB 1H 472K-T | B | 71.1/112.5 |
| C173 | 4030006880 | S.CER C1608 JB 1H 472K-T | B | 74.9/117.7 |
| C174 | 4030006880 | S.CER C1608 JB 1H 472K-T | B | 78.9/73.0 |
| C175 | 4030006880 | S.CER C1608 JB 1H 472K-T | B | 78.0/65.8 |
| C176 | 4030006880 | S.CER C1608 JB 1H 472K-T | B | 81.6/75.9 |
| C177 | 4030007170 | S.CER C1608 CH 1H 221J-T | B | 78.3/115.4 |
| C178 | 4030007110 | S.CER C1608 CH 1H 680J-T | B | 78.3/112.9 |
| C179 | 4030007090 | S.CER C1608 CH 1H 470J-T | B | 74.1/104.0 |
| C180 | 4030007090 | S.CER C1608 CH 1H 470J-T | B | 74.1/105.8 |
| C181 | 4030007070 | S.CER C1608 CH 1H 330J-T | B | 73.4/101.5 |
| C182 | 4030007070 | S.CER C1608 CH 1H 330J-T | B | 71.4/101.5 |
| C183 | 4030007120 | S.CER C1608 CH 1H 820J-T | B | 74.1/99.0 |
| C185 | 4030007070 | S.CER C1608 CH 1H 330J-T | B | 73.4/93.6 |
| C186 | 4030007070 | S.CER C1608 CH 1H 330J-T | B | 71.5/93.6 |
| C187 | 4030007090 | S.CER C1608 CH 1H 470J-T | B | 74.1/90.3 |
| C188 | 4030007090 | S.CER C1608 CH 1H 470J-T | B | 74.1/88.2 |
| C189 | 4030007170 | S.CER C1608 CH 1H 221J-T | B | 74.1/86.0 |
| C190 | 4030007110 | S.CER C1608 CH 1H 680J-T | B | 74.1/83.9 |
| C201 | 4030006880 | S.CER C1608 JB 1H 472K-T | B | 61.6/115.2 |
| C202 | 4030006880 | S.CER C1608 JB 1H 472K-T | B | 58.9/112.5 |
| C203 | 4030006880 | S.CER C1608 JB 1H 472K-T | B | 58.2/116.2 |
| C204 | 4030006880 | S.CER C1608 JB 1H 472K-T | B | 66.4/76.7 |
| C205 | 4030006880 | S.CER C1608 JB 1H 472K-T | B | 71.3/80.2 |
| C206 | 4030006880 | S.CER C1608 JB 1H 472K-T | B | 70.2/74.9 |
| C207 | 4030007160 | S.CER C1608 CH 1H 181J-T | B | 57.8/103.7 |
| C208 | 4030007090 | S.CER C1608 CH 1H 470J-T | B | 57.8/102.1 |
| C209 | 4030007090 | S.CER C1608 CH 1H 470J-T | B | 64.8/95.3 |
| C210 | 4030007040 | S.CER C1608 CH 1H 180J-T | B | 63.2/95.3 |
| C211 | 4030007030 | S.CER C1608 CH 1H 150J-T | B | 60.9/94.6 |
| C212 | 4030007050 | S.CER C1608 CH 1H 220J-T | B | 60.9/93.0 |
| C213 | 4030007090 | S.CER C1608 CH 1H 470J-T | B | 57.8/93.0 |

Eqv.= This component is equivalent to the REF No. component listed above, and may be substituted on parts orders and repairs.

M.=Mounted side (T: Mounted on the Top side, B: Mounted on the Bottom side)
S.=Surface mount

## [BPF UNIT]

| REF NO. | PARTS NO. | DESCRIPTION | M. | H/V LOCATION |
|---|---|---|---|---|
| C214 | 4030006990 | S.CER C1608 CH 1H 080D-T | B | 57.8/94.6 |
| C215 | 4030007050 | S.CER C1608 CH 1H 220J-T | B | 60.1/85.1 |
| C216 | 4030007030 | S.CER C1608 CH 1H 150J-T | B | 58.5/85.1 |
| C217 | 4030007090 | S.CER C1608 CH 1H 470J-T | B | 57.8/82.8 |
| C218 | 4030007040 | S.CER C1608 CH 1H 180J-T | B | 57.8/81.2 |
| C219 | 4030007160 | S.CER C1608 CH 1H 181J-T | B | 57.8/79.6 |
| C220 | 4030007090 | S.CER C1608 CH 1H 470J-T | B | 57.8/78.0 |
| C231 | 4030006880 | S.CER C1608 JB 1H 472K-T | B | 39.5/115.3 |
| C232 | 4030006880 | S.CER C1608 JB 1H 472K-T | B | 36.6/112.5 |
| C233 | 4030006880 | S.CER C1608 JB 1H 472K-T | B | 40.4/117.5 |
| C234 | 4030006880 | S.CER C1608 JB 1H 472K-T | B | 46.3/73.5 |
| C235 | 4030006880 | S.CER C1608 JB 1H 472K-T | B | 49.1/69.2 |
| C236 | 4030006880 | S.CER C1608 JB 1H 472K-T | B | 50.5/69.2 |
| C237 | 4030007140 | S.CER C1608 CH 1H 121J-T | B | 41.3/109.9 |
| C238 | 4030007040 | S.CER C1608 CH 1H 180J-T | B | 41.3/108.3 |
| C239 | 4030007070 | S.CER C1608 CH 1H 330J-T | B | 41.3/103.8 |
| C240 | 4030007040 | S.CER C1608 CH 1H 180J-T | B | 41.3/102.2 |
| C241 | 4030007010 | S.CER C1608 CH 1H 100D-T | B | 40.5/99.9 |
| C242 | 4030007070 | S.CER C1608 CH 1H 330J-T | B | 38.9/99.9 |
| C243 | 4030007090 | S.CER C1608 CH 1H 470J-T | B | 41.3/94.8 |
| C245 | 4030007070 | S.CER C1608 CH 1H 330J-T | B | 40.5/91.3 |
| C246 | 4030007010 | S.CER C1608 CH 1H 100D-T | B | 38.9/91.3 |
| C247 | 4030007070 | S.CER C1608 CH 1H 330J-T | B | 41.3/89.0 |
| C248 | 4030007040 | S.CER C1608 CH 1H 180J-T | B | 41.3/87.4 |
| C249 | 4030007140 | S.CER C1608 CH 1H 121J-T | B | 41.3/85.8 |
| C250 | 4030007040 | S.CER C1608 CH 1H 180J-T | B | 41.3/84.2 |
| C261 | 4030006880 | S.CER C1608 JB 1H 472K-T | B | 27.0/115.2 |
| C262 | 4030006880 | S.CER C1608 JB 1H 472K-T | B | 24.4/112.5 |
| C263 | 4030006880 | S.CER C1608 JB 1H 472K-T | B | 29.7/111.6 |
| C264 | 4030006880 | S.CER C1608 JB 1H 472K-T | T | 36.6/70.9 |
| C265 | 4030006880 | S.CER C1608 JB 1H 472K-T | T | 36.7/68.0 |
| C266 | 4030006880 | S.CER C1608 JB 1H 472K-T | B | 36.7/70.1 |
| C267 | 4030007130 | S.CER C1608 CH 1H 101J-T | B | 23.3/103.6 |
| C268 | 4030007030 | S.CER C1608 CH 1H 150J-T | B | 23.3/102.0 |
| C269 | 4030007050 | S.CER C1608 CH 1H 220J-T | B | 30.3/95.3 |
| C270 | 4030007020 | S.CER C1608 CH 1H 120J-T | B | 28.7/95.3 |
| C271 | 4030007050 | S.CER C1608 CH 1H 220J-T | B | 26.4/94.6 |
| C273 | 4030007050 | S.CER C1608 CH 1H 220J-T | B | 23.3/94.6 |
| C274 | 4030006980 | S.CER C1608 CH 1H 070D-T | B | 23.3/93.0 |
| C275 | 4030007050 | S.CER C1608 CH 1H 220J-T | B | 24.0/85.1 |
| C277 | 4030007050 | S.CER C1608 CH 1H 220J-T | B | 23.3/81.2 |
| C278 | 4030007020 | S.CER C1608 CH 1H 120J-T | B | 23.3/82.8 |
| C279 | 4030007130 | S.CER C1608 CH 1H 101J-T | B | 23.3/73.6 |
| C280 | 4030007030 | S.CER C1608 CH 1H 150J-T | B | 23.4/77.9 |
| C291 | 4030006880 | S.CER C1608 JB 1H 472K-T | B | 219.0/73.3 |
| C292 | 4030006880 | S.CER C1608 JB 1H 472K-T | B | 214.4/77.5 |
| C293 | 4030006880 | S.CER C1608 JB 1H 472K-T | B | 222.8/76.7 |
| C294 | 4030006880 | S.CER C1608 JB 1H 472K-T | B | 209.7/73.0 |
| C295 | 4030006880 | S.CER C1608 JB 1H 472K-T | B | 207.6/77.6 |
| C296 | 4030006880 | S.CER C1608 JB 1H 472K-T | B | 204.0/73.6 |
| C297 | 4030007150 | S.CER C1608 CH 1H 151J-T | T | 213.1/80.0 |
| C302 | 4030007030 | S.CER C1608 CH 1H 150J-T | T | 210.2/82.8 |
| C303 | 4030007130 | S.CER C1608 CH 1H 101J-T | T | 211.8/79.9 |
| C304 | 4030007040 | S.CER C1608 CH 1H 180J-T | T | 208.4/79.9 |
| C321 | 4030006880 | S.CER C1608 JB 1H 472K-T | T | 218.8/97.4 |
| C322 | 4030006880 | S.CER C1608 JB 1H 472K-T | T | 218.8/98.7 |
| C323 | 4030006880 | S.CER C1608 JB 1H 472K-T | B | 213.0/91.0 |
| C324 | 4030006880 | S.CER C1608 JB 1H 472K-T | B | 209.3/90.7 |
| C325 | 4030006880 | S.CER C1608 JB 1H 472K-T | T | 206.7/98.8 |
| C326 | 4030006880 | S.CER C1608 JB 1H 472K-T | T | 204.1/98.8 |
| C327 | 4030007100 | S.CER C1608 CH 1H 560J-T | T | 210.8/90.4 |
| C329 | 4030007110 | S.CER C1608 CH 1H 680J-T | T | 208.2/90.4 |
| C331 | 4030007100 | S.CER C1608 CH 1H 560J-T | T | 208.9/96.7 |
| C353 | 4030006880 | S.CER C1608 JB 1H 472K-T | B | 189.1/91.3 |
| C354 | 4030006880 | S.CER C1608 JB 1H 472K-T | B | 189.5/94.6 |
| C355 | 4030006880 | S.CER C1608 JB 1H 472K-T | T | 189.1/92.4 |
| C356 | 4030006880 | S.CER C1608 JB 1H 472K-T | B | 189.6/86.4 |
| C357 | 4030006880 | S.CER C1608 JB 1H 472K-T | T | 189.1/86.2 |
| C358 | 4030006880 | S.CER C1608 JB 1H 472K-T | B | 189.1/89.2 |
| C359 | 4030006880 | S.CER C1608 JB 1H 472K-T | T | 189.1/80.0 |
| C360 | 4030006880 | S.CER C1608 JB 1H 472K-T | B | 189.6/80.2 |
| C361 | 4030006880 | S.CER C1608 JB 1H 472K-T | B | 189.6/83.0 |
| C362 | 4030006880 | S.CER C1608 JB 1H 472K-T | T | 189.1/73.8 |
| C363 | 4030006880 | S.CER C1608 JB 1H 472K-T | B | 189.6/74.0 |
| C364 | 4030006880 | S.CER C1608 JB 1H 472K-T | B | 189.6/76.8 |
| C365 | 4030006880 | S.CER C1608 JB 1H 472K-T | T | 194.0/68.9 |
| C371 | 4030006880 | S.CER C1608 JB 1H 472K-T | T | 216.0/70.0 |
| C388 | 4030006880 | S.CER C1608 JB 1H 472K-T | B | 239.9/114.3 |
| C389 | 4030010210 | S.CER C3216 JB 1C 105M-T | B | 247.3/111.2 |
| C390 | 4030011600 | S.CER C1608 JB 1E 104K-T | T | 226.2/49.9 |
| C391 | 4030011600 | S.CER C1608 JB 1E 104K-T | B | 237.6/53.2 |
| C392 | 4030011600 | S.CER C1608 JB 1E 104K-T | T | 228.9/62.5 |
| C393 | 4030008860 | S.CER C1608 JB 1H 153K-T | B | 233.2/45.5 |
| C394 | 4030010210 | S.CER C3216 JB 1C 105M-T | B | 235.1/59.6 |
| C395 | 4030008860 | S.CER C1608 JB 1H 153K-T | B | 233.2/40.1 |
| C396 | 4030011600 | S.CER C1608 JB 1E 104K-T | B | 235.5/43.8 |
| C397 | 4550007500 | S.TAN F931D106MBABMA | B | 227.0/44.0 |
| Eqv. | 4550006470 | S.TAN TEESVB2 1D 106M8R | | |
| C398 | 4030011600 | S.CER C1608 JB 1E 104K-T | T | 5.4/102.8 |
| C399 | 4030011600 | S.CER C1608 JB 1E 104K-T | T | 5.3/77.8 |
| C401 | 4030006880 | S.CER C1608 JB 1H 472K-T | B | 223.9/95.5 |
| C402 | 4030010210 | S.CER C3216 JB 1C 105M-T | B | 234.1/107.2 |
| C403 | 4030009520 | S.CER C1608 CH 1H 020B-T | B | 234.0/109.3 |
| C404 | 4030007050 | S.CER C1608 CH 1H 220J-T | B | 234.0/110.9 |
| C405 | 4030010760 | S.CER C1608 CH 1H 331J-T | B | 236.2/113.4 |
| C498 | 4030011600 | S.CER C1608 JB 1E 104K-T | T | 5.3/60.4 |
| C499 | 4030011600 | S.CER C1608 JB 1E 104K-T | T | 6.2/39.7 |
| C501 | 4030006880 | S.CER C1608 JB 1H 472K-T | B | 184.9/22.0 |
| C502 | 4030006880 | S.CER C1608 JB 1H 472K-T | B | 181.6/22.0 |
| C503 | 4030006880 | S.CER C1608 JB 1H 472K-T | B | 183.9/31.7 |
| C504 | 4030006880 | S.CER C1608 JB 1H 472K-T | B | 183.7/54.7 |
| C505 | 4030006880 | S.CER C1608 JB 1H 472K-T | T | 185.3/47.1 |
| C506 | 4030006880 | S.CER C1608 JB 1H 472K-T | B | 184.1/47.2 |
| C507 | 4030017840 | S.CER C2012 CH 1H 222J-T | T | 183.0/35.4 |
| C508 | 4030017850 | S.CER C2012 CH 1H 272J-T | T | 182.9/37.7 |

## [BPF UNIT]

| REF NO. | PARTS NO. | DESCRIPTION | M. | H/V LOCATION |
|---|---|---|---|---|
| C509 | 4030017820 | S.CER C2012 CH 1H 122J-T | T | 182.9/39.5 |
| C510 | 4030017840 | S.CER C2012 CH 1H 222J-T | T | 182.9/44.3 |
| C531 | 4030006880 | S.CER C1608 JB 1H 472K-T | B | 165.7/5.6 |
| C532 | 4030006880 | S.CER C1608 JB 1H 472K-T | B | 165.2/2.3 |
| C533 | 4030006880 | S.CER C1608 JB 1H 472K-T | B | 164.5/9.0 |
| C534 | 4030006880 | S.CER C1608 JB 1H 472K-T | B | 164.0/54.7 |
| C535 | 4030006880 | S.CER C1608 JB 1H 472K-T | B | 167.7/49.6 |
| C536 | 4030006880 | S.CER C1608 JB 1H 472K-T | B | 169.4/53.7 |
| C537 | 4030017810 | S.CER C1608 CH 1H 102J-T | B | 168.7/20.1 |
| C538 | 4030017810 | S.CER C1608 CH 1H 102J-T | B | 168.7/22.0 |
| C539 | 4030010760 | S.CER C1608 CH 1H 331J-T | B | 168.4/24.5 |
| C540 | 4030007140 | S.CER C1608 CH 1H 121J-T | B | 168.4/26.7 |
| C541 | 4030007160 | S.CER C1608 CH 1H 181J-T | B | 165.4/27.7 |
| C542 | 4030007060 | S.CER C1608 CH 1H 270J-T | B | 162.6/27.7 |
| C543 | 4030010760 | S.CER C1608 CH 1H 331J-T | B | 168.4/28.8 |
| C544 | 4030007090 | S.CER C1608 CH 1H 470J-T | B | 168.4/30.7 |
| C545 | 4030007160 | S.CER C1608 CH 1H 181J-T | B | 162.9/34.2 |
| C546 | 4030007060 | S.CER C1608 CH 1H 270J-T | B | 164.9/34.1 |
| C547 | 4030010760 | S.CER C1608 CH 1H 331J-T | B | 168.1/35.1 |
| C548 | 4030007140 | S.CER C1608 CH 1H 121J-T | B | 168.1/36.7 |
| C549 | 4030017810 | S.CER C1608 CH 1H 102J-T | B | 170.4/43.4 |
| C550 | 4030017810 | S.CER C1608 CH 1H 102J-T | B | 170.4/45.9 |
| C561 | 4030006880 | S.CER C1608 JB 1H 472K-T | B | 153.0/8.0 |
| C562 | 4030006880 | S.CER C1608 JB 1H 472K-T | B | 153.0/11.9 |
| C563 | 4030006880 | S.CER C1608 JB 1H 472K-T | B | 152.0/10.0 |
| C564 | 4030006880 | S.CER C1608 JB 1H 472K-T | T | 161.4/46.4 |
| C565 | 4030006880 | S.CER C1608 JB 1H 472K-T | B | 162.2/38.9 |
| C566 | 4030006880 | S.CER C1608 JB 1H 472K-T | T | 165.5/42.4 |
| C567 | 4030017800 | S.CER C1608 CH 1H 561J-T | B | 148.0/17.4 |
| C568 | 4030010760 | S.CER C1608 CH 1H 331J-T | B | 148.6/15.2 |
| C569 | 4030010760 | S.CER C1608 CH 1H 331J-T | B | 144.7/25.8 |
| C570 | 4030007080 | S.CER C1608 CH 1H 390J-T | B | 144.7/27.4 |
| C571 | 4030007100 | S.CER C1608 CH 1H 560J-T | B | 141.7/28.2 |
| C572 | 4030010760 | S.CER C1608 CH 1H 331J-T | B | 139.8/28.2 |
| C573 | 4030010760 | S.CER C1608 CH 1H 331J-T | B | 144.3/34.2 |
| C574 | 4030007090 | S.CER C1608 CH 1H 470J-T | B | 144.3/35.8 |
| C575 | 4030010760 | S.CER C1608 CH 1H 331J-T | B | 141.5/38.7 |
| C576 | 4030007100 | S.CER C1608 CH 1H 560J-T | B | 139.8/38.7 |
| C577 | 4030010760 | S.CER C1608 CH 1H 331J-T | B | 144.4/43.3 |
| C578 | 4030007080 | S.CER C1608 CH 1H 390J-T | B | 144.4/40.9 |
| C579 | 4030017800 | S.CER C1608 CH 1H 561J-T | B | 149.7/45.2 |
| C580 | 4030010760 | S.CER C1608 CH 1H 331J-T | B | 147.9/45.2 |
| C591 | 4030006880 | S.CER C1608 JB 1H 472K-T | B | 140.3/5.1 |
| C592 | 4030006880 | S.CER C1608 JB 1H 472K-T | B | 142.2/5.1 |
| C593 | 4030006880 | S.CER C1608 JB 1H 472K-T | B | 133.1/8.6 |
| C594 | 4030006880 | S.CER C1608 JB 1H 472K-T | B | 140.4/54.3 |
| C595 | 4030006880 | S.CER C1608 JB 1H 472K-T | B | 148.6/52.7 |
| C596 | 4030006880 | S.CER C1608 JB 1H 472K-T | B | 146.0/53.4 |
| C597 | 4030017800 | S.CER C1608 CH 1H 561J-T | B | 126.8/3.2 |
| C598 | 4030011330 | S.CER C1608 CH 1H 391J-T | B | 126.8/5.5 |
| C599 | 4030007160 | S.CER C1608 CH 1H 181J-T | B | 126.8/15.1 |
| C600 | 4030007070 | S.CER C1608 CH 1H 330J-T | B | 126.8/17.3 |
| C601 | 4030007030 | S.CER C1608 CH 1H 150J-T | B | 129.7/18.2 |
| C602 | 4030007120 | S.CER C1608 CH 1H 820J-T | B | 131.7/18.2 |
| C603 | 4030007140 | S.CER C1608 CH 1H 121J-T | B | 126.8/20.6 |
| C604 | 4030007100 | S.CER C1608 CH 1H 560J-T | B | 126.8/18.9 |
| C605 | 4030007120 | S.CER C1608 CH 1H 820J-T | B | 131.5/26.9 |
| C606 | 4030007030 | S.CER C1608 CH 1H 150J-T | B | 129.7/26.9 |
| C607 | 4030007160 | S.CER C1608 CH 1H 181J-T | B | 127.4/29.1 |
| C608 | 4030007070 | S.CER C1608 CH 1H 330J-T | B | 127.4/31.4 |
| C609 | 4030017800 | S.CER C1608 CH 1H 561J-T | B | 127.4/33.3 |
| C610 | 4030011330 | S.CER C1608 CH 1H 391J-T | B | 127.4/35.6 |
| C621 | 4030006880 | S.CER C1608 JB 1H 472K-T | B | 118.5/4.8 |
| C622 | 4030006880 | S.CER C1608 JB 1H 472K-T | B | 121.3/4.1 |
| C623 | 4030006880 | S.CER C1608 JB 1H 472K-T | B | 113.9/8.3 |
| C624 | 4030006880 | S.CER C1608 JB 1H 472K-T | T | 110.3/54.1 |
| C625 | 4030006880 | S.CER C1608 JB 1H 472K-T | B | 107.5/51.5 |
| C626 | 4030006880 | S.CER C1608 JB 1H 472K-T | T | 109.0/52.6 |
| C627 | 4030010760 | S.CER C1608 CH 1H 331J-T | B | 109.3/17.9 |
| C628 | 4030007150 | S.CER C1608 CH 1H 151J-T | B | 109.3/19.8 |
| C629 | 4030007150 | S.CER C1608 CH 1H 151J-T | B | 109.3/21.7 |
| C630 | 4030007060 | S.CER C1608 CH 1H 270J-T | B | 109.3/23.7 |
| C631 | 4030007060 | S.CER C1608 CH 1H 270J-T | B | 105.3/25.9 |
| C632 | 4030007140 | S.CER C1608 CH 1H 121J-T | B | 107.0/25.9 |
| C633 | 4030007150 | S.CER C1608 CH 1H 151J-T | B | 109.3/34.0 |
| C634 | 4030007010 | S.CER C1608 CH 1H 100D-T | B | 109.3/31.8 |
| C635 | 4030007140 | S.CER C1608 CH 1H 121J-T | B | 108.6/37.9 |
| C636 | 4030007060 | S.CER C1608 CH 1H 270J-T | B | 106.0/37.9 |
| C637 | 4030007150 | S.CER C1608 CH 1H 151J-T | B | 109.3/40.4 |
| C638 | 4030007060 | S.CER C1608 CH 1H 270J-T | B | 109.3/42.3 |
| C639 | 4030010760 | S.CER C1608 CH 1H 331J-T | B | 110.3/46.5 |
| C640 | 4030007150 | S.CER C1608 CH 1H 151J-T | B | 110.3/48.5 |
| C651 | 4030006880 | S.CER C1608 JB 1H 472K-T | B | 105.2/7.9 |
| C652 | 4030006880 | S.CER C1608 JB 1H 472K-T | B | 105.2/4.1 |
| C653 | 4030006880 | S.CER C1608 JB 1H 472K-T | B | 103.1/10.2 |
| C654 | 4030006880 | S.CER C1608 JB 1H 472K-T | T | 90.5/54.2 |
| C655 | 4030006880 | S.CER C1608 JB 1H 472K-T | B | 92.2/46.9 |
| C656 | 4030006880 | S.CER C1608 JB 1H 472K-T | T | 93.5/49.6 |
| C657 | 4030007170 | S.CER C1608 CH 1H 221J-T | B | 92.3/6.1 |
| C658 | 4030007170 | S.CER C1608 CH 1H 221J-T | B | 92.3/4.5 |
| C659 | 4030007130 | S.CER C1608 CH 1H 101J-T | B | 92.5/14.9 |
| C660 | 4030007050 | S.CER C1608 CH 1H 220J-T | B | 92.5/17.0 |
| C661 | 4030007070 | S.CER C1608 CH 1H 330J-T | B | 95.3/19.6 |
| C662 | 4030007080 | S.CER C1608 CH 1H 390J-T | B | 93.3/19.6 |
| C663 | 4030007120 | S.CER C1608 CH 1H 820J-T | B | 92.6/27.6 |
| C664 | 4030007050 | S.CER C1608 CH 1H 220J-T | B | 92.6/25.4 |
| C665 | 4030007080 | S.CER C1608 CH 1H 390J-T | B | 95.8/28.4 |
| C666 | 4030007070 | S.CER C1608 CH 1H 330J-T | B | 97.6/28.4 |
| C667 | 4030007130 | S.CER C1608 CH 1H 101J-T | B | 92.3/30.0 |
| C668 | 4030007050 | S.CER C1608 CH 1H 220J-T | B | 92.3/31.8 |
| C669 | 4030007170 | S.CER C1608 CH 1H 221J-T | B | 92.3/33.6 |
| C670 | 4030007170 | S.CER C1608 CH 1H 221J-T | B | 92.3/35.7 |
| C681 | 4030006880 | S.CER C1608 JB 1H 472K-T | B | 74.4/5.2 |
| C682 | 4030006880 | S.CER C1608 JB 1H 472K-T | B | 77.1/3.2 |
| C683 | 4030006880 | S.CER C1608 JB 1H 472K-T | B | 71.6/8.1 |

Eqv.= This component is equivalent to the REF No. component listed above, and may be substituted on parts orders and repairs.

M.=Mounted side (T: Mounted on the Top side, B: Mounted on the Bottom side)
S.=Surface mount

## [BPF UNIT]

| REF NO. | PARTS NO. | DESCRIPTION | M. | H/V LOCATION |
|---|---|---|---|---|
| C684 | 4030006880 | S.CER C1608 JB 1H 472K-T | T | 79.0/54.2 |
| C685 | 4030006880 | S.CER C1608 JB 1H 472K-T | B | 79.1/46.9 |
| C686 | 4030006880 | S.CER C1608 JB 1H 472K-T | B | 81.6/44.1 |
| C687 | 4030007170 | S.CER C1608 CH 1H 221J-T | B | 75.6/11.0 |
| C688 | 4030007110 | S.CER C1608 CH 1H 680J-T | B | 75.6/13.4 |
| C689 | 4030007090 | S.CER C1608 CH 1H 470J-T | B | 70.9/15.3 |
| C690 | 4030007090 | S.CER C1608 CH 1H 470J-T | B | 73.0/15.3 |
| C691 | 4030007070 | S.CER C1608 CH 1H 330J-T | B | 71.0/18.8 |
| C692 | 4030007070 | S.CER C1608 CH 1H 330J-T | B | 73.1/18.8 |
| C693 | 4030007120 | S.CER C1608 CH 1H 820J-T | B | 75.8/21.2 |
| C695 | 4030007070 | S.CER C1608 CH 1H 330J-T | B | 72.7/27.1 |
| C696 | 4030007070 | S.CER C1608 CH 1H 330J-T | B | 71.0/27.1 |
| C697 | 4030007090 | S.CER C1608 CH 1H 470J-T | B | 75.6/29.6 |
| C698 | 4030007090 | S.CER C1608 CH 1H 470J-T | B | 75.6/31.7 |
| C699 | 4030007170 | S.CER C1608 CH 1H 221J-T | B | 75.7/35.9 |
| C700 | 4030007110 | S.CER C1608 CH 1H 680J-T | B | 75.6/34.0 |
| C711 | 4030006880 | S.CER C1608 JB 1H 472K-T | B | 62.0/5.3 |
| C712 | 4030006880 | S.CER C1608 JB 1H 472K-T | B | 63.1/7.9 |
| C713 | 4030006880 | S.CER C1608 JB 1H 472K-T | B | 58.7/8.4 |
| C714 | 4030006880 | S.CER C1608 JB 1H 472K-T | T | 68.2/54.2 |
| C715 | 4030006880 | S.CER C1608 JB 1H 472K-T | B | 68.5/42.8 |
| C716 | 4030006880 | S.CER C1608 JB 1H 472K-T | B | 70.1/46.3 |
| C717 | 4030007160 | S.CER C1608 CH 1H 181J-T | B | 57.7/20.2 |
| C718 | 4030007090 | S.CER C1608 CH 1H 470J-T | B | 57.7/17.6 |
| C719 | 4030007090 | S.CER C1608 CH 1H 470J-T | B | 57.5/23.2 |
| C720 | 4030007040 | S.CER C1608 CH 1H 180J-T | B | 57.5/25.3 |
| C721 | 4030007030 | S.CER C1608 CH 1H 150J-T | B | 61.1/27.1 |
| C722 | 4030007050 | S.CER C1608 CH 1H 220J-T | B | 63.2/27.1 |
| C723 | 4030007090 | S.CER C1608 CH 1H 470J-T | B | 57.7/33.8 |
| C724 | 4030006990 | S.CER C1608 CH 1H 080D-T | B | 57.7/31.6 |
| C725 | 4030007050 | S.CER C1608 CH 1H 220J-T | B | 63.3/37.6 |
| C726 | 4030007030 | S.CER C1608 CH 1H 150J-T | B | 61.3/37.6 |
| C727 | 4030007090 | S.CER C1608 CH 1H 470J-T | B | 57.8/38.4 |
| C728 | 4030007040 | S.CER C1608 CH 1H 180J-T | B | 57.8/40.6 |
| C729 | 4030007160 | S.CER C1608 CH 1H 181J-T | B | 57.8/46.3 |
| C730 | 4030007090 | S.CER C1608 CH 1H 470J-T | B | 57.8/48.7 |
| C741 | 4030006880 | S.CER C1608 JB 1H 472K-T | B | 40.8/5.5 |
| C742 | 4030006880 | S.CER C1608 JB 1H 472K-T | B | 42.8/3.5 |
| C743 | 4030006880 | S.CER C1608 JB 1H 472K-T | B | 37.0/8.1 |
| C744 | 4030006880 | S.CER C1608 JB 1H 472K-T | T | 46.3/54.2 |
| C745 | 4030006880 | S.CER C1608 JB 1H 472K-T | T | 46.3/46.6 |
| C746 | 4030006880 | S.CER C1608 JB 1H 472K-T | B | 49.5/50.5 |
| C747 | 4030007140 | S.CER C1608 CH 1H 121J-T | B | 41.3/13.3 |
| C748 | 4030007040 | S.CER C1608 CH 1H 180J-T | B | 41.3/10.8 |
| C749 | 4030007070 | S.CER C1608 CH 1H 330J-T | B | 41.0/18.4 |
| C750 | 4030007040 | S.CER C1608 CH 1H 180J-T | B | 41.1/16.5 |
| C751 | 4030007010 | S.CER C1608 CH 1H 100D-T | B | 35.3/17.1 |
| C752 | 4030007070 | S.CER C1608 CH 1H 330J-T | B | 37.5/17.1 |
| C753 | 4030007090 | S.CER C1608 CH 1H 470J-T | B | 41.1/20.4 |
| C755 | 4030007070 | S.CER C1608 CH 1H 330J-T | B | 35.5/25.6 |
| C756 | 4030007010 | S.CER C1608 CH 1H 100D-T | B | 37.5/25.6 |
| C757 | 4030007070 | S.CER C1608 CH 1H 330J-T | B | 41.1/27.6 |
| C758 | 4030007040 | S.CER C1608 CH 1H 180J-T | B | 41.1/29.5 |
| C759 | 4030007140 | S.CER C1608 CH 1H 121J-T | B | 41.3/32.6 |
| C760 | 4030007040 | S.CER C1608 CH 1H 180J-T | B | 41.3/35.0 |
| C771 | 4030006880 | S.CER C1608 JB 1H 472K-T | B | 27.6/5.6 |
| C772 | 4030006880 | S.CER C1608 JB 1H 472K-T | B | 29.2/8.6 |
| C773 | 4030006880 | S.CER C1608 JB 1H 472K-T | B | 23.6/8.3 |
| C774 | 4030006880 | S.CER C1608 JB 1H 472K-T | T | 35.9/54.4 |
| C775 | 4030006880 | S.CER C1608 JB 1H 472K-T | B | 34.2/44.6 |
| C776 | 4030006880 | S.CER C1608 JB 1H 472K-T | B | 36.4/46.1 |
| C777 | 4030007130 | S.CER C1608 CH 1H 101J-T | B | 24.2/20.0 |
| C778 | 4030007030 | S.CER C1608 CH 1H 150J-T | B | 24.2/17.9 |
| C779 | 4030007050 | S.CER C1608 CH 1H 220J-T | B | 24.0/23.7 |
| C780 | 4030007020 | S.CER C1608 CH 1H 120J-T | B | 24.0/25.6 |
| C781 | 4030007050 | S.CER C1608 CH 1H 220J-T | B | 27.6/26.5 |
| C783 | 4030007050 | S.CER C1608 CH 1H 220J-T | B | 24.2/32.4 |
| C784 | 4030006980 | S.CER C1608 CH 1H 070D-T | B | 24.2/34.4 |
| C785 | 4030007050 | S.CER C1608 CH 1H 220J-T | B | 27.8/37.7 |
| C787 | 4030007050 | S.CER C1608 CH 1H 220J-T | B | 24.5/38.5 |
| C788 | 4030007020 | S.CER C1608 CH 1H 120J-T | B | 24.5/40.8 |
| C789 | 4030007130 | S.CER C1608 CH 1H 101J-T | B | 24.1/46.8 |
| C790 | 4030007030 | S.CER C1608 CH 1H 150J-T | B | 24.1/49.1 |
| C801 | 4030006880 | S.CER C1608 JB 1H 472K-T | B | 218.8/46.3 |
| C802 | 4030006880 | S.CER C1608 JB 1H 472K-T | B | 223.0/44.4 |
| C803 | 4030006880 | S.CER C1608 JB 1H 472K-T | B | 211.6/44.7 |
| C804 | 4030006880 | S.CER C1608 JB 1H 472K-T | B | 208.8/27.5 |
| C805 | 4030006880 | S.CER C1608 JB 1H 472K-T | B | 208.3/43.7 |
| C806 | 4030006880 | S.CER C1608 JB 1H 472K-T | B | 203.8/46.1 |
| C813 | 4030007150 | S.CER C1608 CH 1H 151J-T | T | 212.7/41.2 |
| C816 | 4030007030 | S.CER C1608 CH 1H 150J-T | T | 213.8/39.1 |
| C820 | 4030007130 | S.CER C1608 CH 1H 101J-T | T | 211.4/39.8 |
| C821 | 4030007040 | S.CER C1608 CH 1H 180J-T | T | 208.1/39.8 |
| C831 | 4030006880 | S.CER C1608 JB 1H 472K-T | T | 218.9/22.1 |
| C832 | 4030006880 | S.CER C1608 JB 1H 472K-T | T | 218.9/20.8 |
| C833 | 4030006880 | S.CER C1608 JB 1H 472K-T | B | 214.5/27.5 |
| C834 | 4030006880 | S.CER C1608 JB 1H 472K-T | B | 209.8/46.9 |
| C835 | 4030006880 | S.CER C1608 JB 1H 472K-T | T | 201.0/20.7 |
| C836 | 4030006880 | S.CER C1608 JB 1H 472K-T | T | 203.7/20.7 |
| C837 | 4030007100 | S.CER C1608 CH 1H 560J-T | T | 212.0/30.0 |
| C839 | 4030007110 | S.CER C1608 CH 1H 680J-T | T | 207.9/30.0 |
| C841 | 4030007100 | S.CER C1608 CH 1H 560J-T | T | 208.7/25.1 |
| C853 | 4030006880 | S.CER C1608 JB 1H 472K-T | B | 188.8/25.1 |
| C854 | 4030006880 | S.CER C1608 JB 1H 472K-T | B | 189.6/27.6 |
| C855 | 4030006880 | S.CER C1608 JB 1H 472K-T | T | 189.1/25.3 |
| C856 | 4030006880 | S.CER C1608 JB 1H 472K-T | B | 189.6/30.5 |
| C857 | 4030006880 | S.CER C1608 JB 1H 472K-T | T | 189.1/30.5 |
| C858 | 4030006880 | S.CER C1608 JB 1H 472K-T | B | 189.6/33.8 |
| C859 | 4030006880 | S.CER C1608 JB 1H 472K-T | T | 189.1/36.7 |
| C860 | 4030006880 | S.CER C1608 JB 1H 472K-T | B | 189.6/37.2 |
| C861 | 4030006880 | S.CER C1608 JB 1H 472K-T | B | 189.6/40.0 |
| C862 | 4030006880 | S.CER C1608 JB 1H 472K-T | T | 189.1/42.9 |
| C863 | 4030006880 | S.CER C1608 JB 1H 472K-T | B | 189.6/42.9 |
| C864 | 4030006880 | S.CER C1608 JB 1H 472K-T | B | 189.6/45.8 |
| C865 | 4030006880 | S.CER C1608 JB 1H 472K-T | T | 194.0/50.2 |

## [BPF UNIT]

| REF NO. | PARTS NO. | DESCRIPTION | M. | H/V LOCATION |
|---|---|---|---|---|
| C876 | 4030006880 | S.CER C1608 JB 1H 472K-T | B | 241.3/19.5 |
| C878 | 4030010760 | S.CER C1608 CH 1H 331J-T | B | 245.1/17.9 |
| C879 | 4030007050 | S.CER C1608 CH 1H 220J-T | B | 245.1/19.5 |
| C880 | 4030009520 | S.CER C1608 CH 1H 020B-T | B | 247.9/19.5 |
| C881 | 4030010210 | S.CER C3216 JB 1C 105M-T | B | 244.0/34.0 |
| C900 | 4030006880 | S.CER C1608 JB 1H 472K-T | B | 215.6/99.6 |
| C901 | 4030005110 | S.CER C2012 JB 1E 473K-T | T | 15.1/26.8 |
| C902 | 4510008520 | S.ELE EEE1CA470SP | T | 12.3/21.7 |
| C903 | 4030005110 | S.CER C2012 JB 1E 473K-T | B | 12.3/12.9 |
| C904 | 4510009150 | S.ELE EEE1EA470WP | T | 12.3/13.4 |
| C905 | 4030006880 | S.CER C1608 JB 1H 472K-T | B | 244.8/94.1 |
| C906 | 4030006880 | S.CER C1608 JB 1H 472K-T | B | 244.8/91.3 |
| C907 | 4030006900 | S.CER C1608 JB 1H 103K-T | B | 213.9/106.3 |
| C908 | 4030011600 | S.CER C1608 JB 1E 104K-T | B | 212.8/115.6 |
| C909 | 4030006880 | S.CER C1608 JB 1H 472K-T | B | 218.8/113.6 |
| C910 | 4030006900 | S.CER C1608 JB 1H 103K-T | B | 215.5/117.9 |
| C911 | 4030006900 | S.CER C1608 JB 1H 103K-T | B | 210.7/106.3 |
| C912 | 4030006880 | S.CER C1608 JB 1H 472K-T | B | 201.9/99.6 |
| C914 | 4030006880 | S.CER C1608 JB 1H 472K-T | B | 194.7/99.4 |
| C915 | 4030006900 | S.CER C1608 JB 1H 103K-T | B | 192.6/110.6 |
| C916 | 4030006880 | S.CER C1608 JB 1H 472K-T | T | 200.3/118.3 |
| C917 | 4030006900 | S.CER C1608 JB 1H 103K-T | T | 197.8/117.6 |
| C918 | 4030006900 | S.CER C1608 JB 1H 103K-T | B | 187.3/106.3 |
| C919 | 4030006880 | S.CER C1608 JB 1H 472K-T | B | 180.0/100.0 |
| C921 | 4030006880 | S.CER C1608 JB 1H 472K-T | T | 201.6/118.3 |
| C922 | 4030011600 | S.CER C1608 JB 1E 104K-T | T | 208.5/117.4 |
| C923 | 4030011600 | S.CER C1608 JB 1E 104K-T | T | 212.3/117.4 |
| C924 | 4030011600 | S.CER C1608 JB 1E 104K-T | B | 192.9/116.4 |
| C925 | 4030011600 | S.CER C1608 JB 1E 104K-T | T | 187.7/117.4 |
| C926 | 4030011600 | S.CER C1608 JB 1E 104K-T | T | 191.6/117.5 |
| C927 | 4030006960 | S.CER C1608 CH 1H 050C-T | B | 209.4/113.7 |
| C928 | 4030006960 | S.CER C1608 CH 1H 050C-T | B | 187.5/114.2 |
| C950 | 4030006880 | S.CER C1608 JB 1H 472K-T | B | 206.3/4.6 |
| C951 | 4030006900 | S.CER C1608 JB 1H 103K-T | B | 215.7/17.8 |
| C952 | 4030011600 | S.CER C1608 JB 1E 104K-T | B | 211.9/20.0 |
| C953 | 4030006880 | S.CER C1608 JB 1H 472K-T | B | 205.3/2.8 |
| C954 | 4030006900 | S.CER C1608 JB 1H 103K-T | B | 218.6/2.5 |
| C955 | 4030006900 | S.CER C1608 JB 1H 103K-T | B | 208.6/11.4 |
| C956 | 4030006880 | S.CER C1608 JB 1H 472K-T | T | 203.5/2.3 |
| C958 | 4030006880 | S.CER C1608 JB 1H 472K-T | B | 190.0/4.9 |
| C959 | 4030006900 | S.CER C1608 JB 1H 103K-T | B | 195.2/16.5 |
| C960 | 4030006880 | S.CER C1608 JB 1H 472K-T | B | 196.3/2.3 |
| C961 | 4030006900 | S.CER C1608 JB 1H 103K-T | B | 202.2/4.0 |
| C962 | 4030006900 | S.CER C1608 JB 1H 103K-T | B | 184.1/16.6 |
| C963 | 4030006880 | S.CER C1608 JB 1H 472K-T | B | 181.0/3.9 |
| C965 | 4030006880 | S.CER C1608 JB 1H 472K-T | T | 208.4/3.9 |
| C967 | 4030011600 | S.CER C1608 JB 1E 104K-T | T | 209.0/21.4 |
| C968 | 4030011600 | S.CER C1608 JB 1E 104K-T | T | 213.0/21.4 |
| C969 | 4030011600 | S.CER C1608 JB 1E 104K-T | B | 191.6/19.9 |
| C970 | 4030011600 | S.CER C1608 JB 1E 104K-T | T | 187.9/21.4 |
| C971 | 4030011600 | S.CER C1608 JB 1E 104K-T | T | 193.0/19.8 |
| C972 | 4030006960 | S.CER C1608 CH 1H 050C-T | B | 208.3/19.3 |
| C973 | 4030006960 | S.CER C1608 CH 1H 050C-T | B | 187.7/19.3 |
| C974 | 4030006880 | S.CER C1608 JB 1H 472K-T | B | 235.8/11.5 |
| | | | | |
| RL1 | 6330001750 | REL FTR-B4CA012Z | | |
| RL2 | 6330001750 | REL FTR-B4CA012Z | | |
| RL21 | 6330001750 | REL FTR-B4CA012Z | | |
| RL22 | 6330001750 | REL FTR-B4CA012Z | | |
| RL51 | 6330001750 | REL FTR-B4CA012Z | | |
| RL52 | 6330001750 | REL FTR-B4CA012Z | | |
| RL81 | 6330001750 | REL FTR-B4CA012Z | | |
| RL82 | 6330001750 | REL FTR-B4CA012Z | | |
| RL111 | 6330001750 | REL FTR-B4CA012Z | | |
| RL112 | 6330001750 | REL FTR-B4CA012Z | | |
| RL141 | 6330001750 | REL FTR-B4CA012Z | | |
| RL142 | 6330001750 | REL FTR-B4CA012Z | | |
| RL171 | 6330001750 | REL FTR-B4CA012Z | | |
| RL172 | 6330001750 | REL FTR-B4CA012Z | | |
| RL201 | 6330001750 | REL FTR-B4CA012Z | | |
| RL202 | 6330001750 | REL FTR-B4CA012Z | | |
| RL231 | 6330001750 | REL FTR-B4CA012Z | | |
| RL232 | 6330001750 | REL FTR-B4CA012Z | | |
| RL261 | 6330001750 | REL FTR-B4CA012Z | | |
| RL262 | 6330001750 | REL FTR-B4CA012Z | | |
| RL291 | 6330001750 | REL FTR-B4CA012Z | | |
| RL292 | 6330001750 | REL FTR-B4CA012Z | | |
| RL321 | 6330001750 | REL FTR-B4CA012Z | | |
| RL322 | 6330001750 | REL FTR-B4CA012Z | | |
| RL351 | 6330001750 | REL FTR-B4CA012Z | | |
| RL352 | 6330001750 | REL FTR-B4CA012Z | | |
| RL353 | 6330001750 | REL FTR-B4CA012Z | | |
| RL354 | 6330001750 | REL FTR-B4CA012Z | | |
| RL355 | 6330001750 | REL FTR-B4CA012Z | | |
| RL371 | 6330001750 | REL FTR-B4CA012Z | | |
| RL381 | 6330001770 | REL SIP-1A-12Y | | |
| RL401 | 6330001770 | REL SIP-1A-12Y | | |
| RL402 | 6330001750 | REL FTR-B4CA012Z | | |
| RL501 | 6330001750 | REL FTR-B4CA012Z | | |
| RL502 | 6330001750 | REL FTR-B4CA012Z | | |
| RL531 | 6330001750 | REL FTR-B4CA012Z | | |
| RL532 | 6330001750 | REL FTR-B4CA012Z | | |
| RL561 | 6330001750 | REL FTR-B4CA012Z | | |
| RL562 | 6330001750 | REL FTR-B4CA012Z | | |
| RL591 | 6330001750 | REL FTR-B4CA012Z | | |
| RL592 | 6330001750 | REL FTR-B4CA012Z | | |
| RL621 | 6330001750 | REL FTR-B4CA012Z | | |
| RL622 | 6330001750 | REL FTR-B4CA012Z | | |
| RL651 | 6330001750 | REL FTR-B4CA012Z | | |
| RL652 | 6330001750 | REL FTR-B4CA012Z | | |
| RL681 | 6330001750 | REL FTR-B4CA012Z | | |
| RL682 | 6330001750 | REL FTR-B4CA012Z | | |
| RL711 | 6330001750 | REL FTR-B4CA012Z | | |
| RL712 | 6330001750 | REL FTR-B4CA012Z | | |

Eqv.= This component is equivalent to the REF No. component listed above, and may be substituted on parts orders and repairs.

M.=Mounted side (T: Mounted on the Top side, B: Mounted on the Bottom side)
S.=Surface mount

## [BPF UNIT]

| REF NO. | PARTS NO. | DESCRIPTION | | | M. | H/V LOCATION |
|---|---|---|---|---|---|---|
| RL741 | 6330001750 | REL | FTR-B4CA012Z | | | |
| RL742 | 6330001750 | REL | FTR-B4CA012Z | | | |
| RL771 | 6330001750 | REL | FTR-B4CA012Z | | | |
| RL772 | 6330001750 | REL | FTR-B4CA012Z | | | |
| RL801 | 6330001750 | REL | FTR-B4CA012Z | | | |
| RL802 | 6330001750 | REL | FTR-B4CA012Z | | | |
| RL831 | 6330001750 | REL | FTR-B4CA012Z | | | |
| RL832 | 6330001750 | REL | FTR-B4CA012Z | | | |
| RL851 | 6330001750 | REL | FTR-B4CA012Z | | | |
| RL852 | 6330001750 | REL | FTR-B4CA012Z | | | |
| RL853 | 6330001750 | REL | FTR-B4CA012Z | | | |
| RL854 | 6330001750 | REL | FTR-B4CA012Z | | | |
| RL855 | 6330001750 | REL | FTR-B4CA012Z | | | |
| RL871 | 6330001770 | REL | SIP-1A-12Y | | | |
| RL900 | 6330001750 | REL | FTR-B4CA012Z | | | |
| RL901 | 6330001750 | REL | FTR-B4CA012Z | | | |
| RL902 | 6330001750 | REL | FTR-B4CA012Z | | | |
| RL903 | 6330001750 | REL | FTR-B4CA012Z | | | |
| RL950 | 6330001750 | REL | FTR-B4CA012Z | | | |
| RL951 | 6330001750 | REL | FTR-B4CA012Z | | | |
| RL952 | 6330001750 | REL | FTR-B4CA012Z | | | |
| RL953 | 6330001750 | REL | FTR-B4CA012Z | | | |
| RL954 | 6330001750 | REL | FTR-B4CA012Z | | | |
| J1 | 6510020520 | S.CON | 52808-1291 | [USA] | T | 6.0/17.0 |
| | 6510020521 | S.CON | 52808-1271(1290) | [EUR] | | |
| | 6510020521 | S.CON | 52808-1271(1290) | [UK] | | |
| J101 | 6510028210 | CON | SJ050010 (TMP-J01X-V6) | | | |
| J102 | 6510028210 | CON | SJ050010 (TMP-J01X-V6) | | | |
| J103 | 6510023751 | CON | 01K1971-20 | | | |
| J104 | 6510023751 | CON | 01K1971-20 | | | |
| J105 | 6510023751 | CON | 01K1971-20 | | | |
| J106 | 6510028210 | CON | SJ050010 (TMP-J01X-V6) | | | |
| J107 | 6510028210 | CON | SJ050010 (TMP-J01X-V6) | | | |
| J108 | 6510028210 | CON | SJ050010 (TMP-J01X-V6) | | | |
| J504 | 6510023751 | CON | 01K1971-20 | | | |
| J505 | 6510023751 | CON | 01K1971-20 | | | |
| J506 | 6510028210 | CON | SJ050010 (TMP-J01X-V6) | | | |
| J601 | 6510028210 | CON | SJ050010 (TMP-J01X-V6) | | | |
| J602 | 6510028210 | CON | SJ050010 (TMP-J01X-V6) | | | |
| EP900 | 6910012350 | S.BEA | MMZ1608Y 102BT | | B | 218.9/98.9 |
| EP901 | 6910012350 | S.BEA | MMZ1608Y 102BT | | B | 204.2/100.4 |
| EP902 | 6910012350 | S.BEA | MMZ1608Y 102BT | | B | 197.2/98.7 |
| EP903 | 6910012350 | S.BEA | MMZ1608Y 102BT | | B | 189.7/100.1 |
| EP950 | 6910012350 | S.BEA | MMZ1608Y 102BT | | B | 208.8/3.5 |
| EP951 | 6910012350 | S.BEA | MMZ1608Y 102BT | | T | 205.4/3.2 |
| EP952 | 6910012350 | S.BEA | MMZ1608Y 102BT | | B | 193.3/3.0 |
| EP953 | 6910012350 | S.BEA | MMZ1608Y 102BT | | B | 184.6/3.8 |

## [MAIN UNIT]

| REF NO. | PARTS NO. | DESCRIPTION | | M. | H/V LOCATION |
|---|---|---|---|---|---|
| IC1 | 1110003870 | S.IC | NJM2058M-TE1-#ZZZB | T | 226.0/83.5 |
| IC2 | 1110001901 | S.IC | UPC4570G2-E1-A | T | 187.0/68.8 |
| IC3 | 1130005641 | S.IC | TC4W53F(TE12LF) | T | 191.1/75.2 |
| IC4 | 1110006300 | S.IC | NJM2172V-TE1-#ZZZB | T | 186.6/85.7 |
| IC5 | 1130005641 | S.IC | TC4W53F(TE12LF) | T | 184.3/75.2 |
| IC50 | 1190001930 | S.IC | PS7122AL-1A-E3 | B | 114.4/109.1 |
| IC60 | 1110003870 | S.IC | NJM2058M-TE1-#ZZZB | B | 116.1/87.4 |
| IC61 | 1110003870 | S.IC | NJM2058M-TE1-#ZZZB | B | 129.6/94.8 |
| IC100 | 1130005641 | S.IC | TC4W53F(TE12LF) | T | 211.8/91.0 |
| IC101 | 1130005641 | S.IC | TC4W53F(TE12LF) | T | 205.0/91.0 |
| IC102 | 1110001901 | S.IC | UPC4570G2-E1-A | T | 209.7/68.5 |
| IC104 | 1110001901 | S.IC | UPC4570G2-E1-A | T | 209.8/43.4 |
| IC105 | 1110006300 | S.IC | NJM2172V-TE1-#ZZZB | T | 220.4/58.4 |
| IC140 | 1110006141 | IC | LA4485-E | | |
| IC180 | 1110006300 | S.IC | NJM2172V-TE1-#ZZZB | T | 187.0/57.6 |
| IC181 | 1130005641 | S.IC | TC4W53F(TE12LF) | T | 186.9/40.3 |
| IC182 | 1110006160 | S.IC | TPA6111A2DGN | T | 186.8/35.8 |
| IC191 | 1130005641 | S.IC | TC4W53F(TE12LF) | T | 193.3/30.0 |
| IC192 | 1130005641 | S.IC | TC4W53F(TE12LF) | T | 180.7/30.2 |
| IC201 | 1130005641 | S.IC | TC4W53F(TE12LF) | T | 147.7/71.6 |
| IC210 | 1110006300 | S.IC | NJM2172V-TE1-#ZZZB | T | 160.5/90.1 |
| IC230 | 1110001901 | S.IC | UPC4570G2-E1-A | T | 68.3/22.2 |
| IC250 | 1130011530 | S.IC | CD74HC4094M96 | T | 137.4/32.2 |
| IC251 | 1160000132 | S.IC | TD62783AFG(OSEL) | T | 125.7/34.0 |
| IC260 | 1130011530 | S.IC | CD74HC4094M96 | T | 137.4/46.6 |
| IC261 | 1160000132 | S.IC | TD62783AFG(OSEL) | T | 125.7/48.4 |
| IC290 | 1130011530 | S.IC | CD74HC4094M96 | T | 149.4/35.7 |
| IC291 | 1160000132 | S.IC | TD62783AFG(OSEL) | T | 161.1/34.0 |
| IC310 | 1130011530 | S.IC | CD74HC4094M96 | T | 149.4/50.1 |
| IC311 | 1160000132 | S.IC | TD62783AFG(OSEL) | T | 161.1/48.4 |
| IC330 | 1130012000 | S.IC | M62352AGP C60Q | T | 150.4/61.0 |
| IC331 | 1130012000 | S.IC | M62352AGP C60Q | T | 161.1/61.1 |
| IC450 | 1180002650 | S.REG | SI-3012KS-TL | B | 212.6/31.3 |
| IC451 | 1180002650 | S.REG | SI-3012KS-TL | B | 160.0/15.2 |
| IC452 | 1180002650 | S.REG | SI-3012KS-TL | B | 93.6/51.5 |
| IC460 | 1130005641 | S.IC | TC4W53F(TE12LF) | T | 147.7/80.1 |
| IC490 | 1130005641 | S.IC | TC4W53F(TE12LF) | B | 163.4/61.6 |
| IC491 | 1110003870 | S.IC | NJM2058M-TE1-#ZZZB | B | 236.2/21.9 |
| IC495 | 1130011990 | S.IC | SN74LVC1G08DCKR | T | 14.6/122.5 |
| IC501 | 1110006100 | S.IC | NJM5534MD-TE1-#ZZZB | T | 22.6/66.4 |
| IC502 | 1110006100 | S.IC | NJM5534MD-TE1-#ZZZB | T | 22.6/78.5 |
| IC503 | 1110005461 | S.IC | TA4107F(TE12LF) | T | 23.2/91.9 |
| IC550 | 1180001771 | S.IC | TA79L05F(TE12LF) | T | 125.5/103.1 |
| IC820 | 1110006131 | S.IC | UPC4094G2-E1-A | T | 83.5/59.3 |
| IC821 | 1110006300 | S.IC | NJM2172V-TE1-#ZZZB | T | 160.5/74.8 |
| Q1 | 1590001050 | S.TRA | DTC114TUA T106 | B | 217.0/105.3 |
| Q2 | 1590001050 | S.TRA | DTC114TUA T106 | B | 174.9/102.8 |
| Q3 | 1530002060 | S.TRA | 2SC4081 T106 R | B | 161.8/96.7 |
| Q4 | 1530002060 | S.TRA | 2SC4081 T106 R | B | 172.7/98.0 |
| Q5 | 1590001330 | S.TRA | DTA114EUA T106 | B | 167.1/92.0 |
| Q6 | 1530004210 | S.TRA | DSC7004S0L | B | 166.4/102.1 |
| Q7 | 1530002060 | S.TRA | 2SC4081 T106 R | B | 147.8/110.4 |
| Q8 | 1530002060 | S.TRA | 2SC4081 T106 R | T | 222.2/99.7 |
| Q9 | 1530002060 | S.TRA | 2SC4081 T106 R | T | 179.3/101.0 |
| Q50 | 1590001050 | S.TRA | DTC114TUA T106 | B | 119.0/96.6 |
| Q51 | 1590001050 | S.TRA | DTC114TUA T106 | B | 118.6/100.4 |
| Q52 | 1530002060 | S.TRA | 2SC4081 T106 R | T | 83.5/107.6 |
| Q60 | 1590002710 | S.TRA | UMH11NTN | T | 118.7/87.6 |
| Q61 | 1590002150 | S.TRA | DTC144TE TL | T | 117.8/80.2 |
| Q62 | 1510000510 | S.TRA | 2SA1576A T106R | T | 123.1/93.8 |
| Q63 | 1590001050 | S.TRA | DTC114TUA T106 | T | 120.3/80.0 |
| Q64 | 1590004050 | S.TRA | LDTA144EET1G <SLVJ> | T | 120.3/82.3 |
| Q100 | 1590004920 | S.FET | 2SJ145 D | T | 214.2/79.1 |
| Q101 | 1590004920 | S.FET | 2SJ145 D | T | 204.6/79.1 |
| Q131 | 1560001790 | S.FET | LN2306LT1G <SLVJ> | T | 228.6/70.9 |
| Q132 | 1560001790 | S.FET | LN2306LT1G <SLVJ> | T | 233.4/47.7 |
| Q140 | 1540000471 | S.TRA | 2SD1801S-TL-E | T | 241.8/37.3 |
| Q141 | 1590000680 | S.TRA | DTC114EUA T106 | B | 247.8/92.4 |
| Q142 | 1590000680 | S.TRA | DTC114EUA T106 | B | 239.9/92.4 |
| Q143 | 1590001050 | S.TRA | DTC114TUA T106 | T | 255.3/55.4 |
| Q351 | 1560001260 | S.FET | 2SK3018 T106 | T | 129.9/85.1 |
| Q352 | 1530002060 | S.TRA | 2SC4081 T106 R | T | 132.7/85.1 |
| Q474 | 1510000510 | S.TRA | 2SA1576A T106R | T | 132.4/77.2 |
| Q476 | 1590001050 | S.TRA | DTC114TUA T106 | T | 129.4/77.1 |
| Q490 | 1590000680 | S.TRA | DTC114EUA T106 | B | 232.2/4.5 |
| Q491 | 1520000460 | S.TRA | 2SB1132 T100 R | B | 224.3/4.3 |
| Q501 | 1580000751 | S.FET | 3SK294(TE85LF) | B | 26.9/91.8 |
| Q502 | 1590000680 | S.TRA | DTC114EUA T106 | T | 47.1/79.4 |
| Q503 | 1590002710 | S.TRA | UMH11NTN | T | 47.3/75.9 |
| Q504 | 1560000561 | S.FET | 2SK882-GR(TE85LF) | B | 49.3/91.2 |
| Q506 | 1560000561 | S.FET | 2SK882-GR(TE85LF) | B | 102.7/82.6 |
| Q507 | 1530003151 | S.TRA | 2SC4673D-TD-E | T | 103.9/65.5 |
| Q508 | 1530003842 | S.TRA | 2SC5501A-4-TR-E | T | 58.8/68.9 |
| Q801 | 1530003852 | S.TRA | 2SC5551A-F-TD-E | T | 43.1/18.2 |
| Q802 | 1520000860 | S.TRA | 2SB1302S-TD-E | B | 89.9/83.7 |
| Q803 | 1590000680 | S.TRA | DTC114EUA T106 | B | 83.7/84.8 |
| Q804 | 1590002710 | S.TRA | UMH11NTN | T | 33.9/20.3 |
| Q805 | 1590000680 | S.TRA | DTC114EUA T106 | T | 30.9/21.6 |
| Q806 | 1530002060 | S.TRA | 2SC4081 T106 R | T | 35.5/73.8 |
| Q808 | 1590001330 | S.TRA | DTA114EUA T106 | T | 45.6/70.2 |
| Q809 | 1590000680 | S.TRA | DTC114EUA T106 | T | 48.7/70.2 |
| Q810 | 1530002060 | S.TRA | 2SC4081 T106 R | T | 231.4/34.2 |
| D1 | 1750000550 | S.DIO | 1SS355 TE-17 | B | 162.9/104.2 |
| D2 | 1750000550 | S.DIO | 1SS355 TE-17 | B | 170.6/104.2 |
| D3 | 1790001750 | S.DIO | DSM3MA4 | B | 65.5/122.7 |
| D4 | 1790001750 | S.DIO | DSM3MA4 | B | 65.5/113.6 |
| D50 | 1750000550 | S.DIO | 1SS355 TE-17 | B | 114.5/100.6 |
| D51 | 1790001670 | S.DIO | RB706F-40T106 | T | 90.8/112.8 |
| D52 | 1750000550 | S.DIO | 1SS355 TE-17 | T | 88.4/112.8 |
| D60 | 1750000550 | S.DIO | 1SS355 TE-17 | B | 126.8/86.8 |
| D61 | 1750000550 | S.DIO | 1SS355 TE-17 | B | 126.6/83.4 |

Eqv.= This component is equivalent to the REF No. component listed above, and may be substituted on parts orders and repairs.

M.=Mounted side (T: Mounted on the Top side, B: Mounted on the Bottom side)
S.=Surface mount

## [MAIN UNIT]

| REF NO. | PARTS NO. | DESCRIPTION | M. | H/V LOCATION |
|---|---|---|---|---|
| D62 | 1750000550 | S.DIO 1SS355 TE-17 | B | 120.6/77.6 |
| D63 | 1750000550 | S.DIO 1SS355 TE-17 | B | 116.5/93.6 |
| D64 | 1790001241 | S.DIO MA2S7280GL | B | 108.1/78.3 |
| D65 | 1750000550 | S.DIO 1SS355 TE-17 | B | 123.1/100.1 |
| D66 | 1750000550 | S.DIO 1SS355 TE-17 | B | 134.3/89.4 |
| D67 | 1730002341 | S.ZEN MAZ8047GML | B | 122.8/95.8 |
| D140 | 1750000550 | S.DIO 1SS355 TE-17 | B | 247.8/95.1 |
| D141 | 1750000550 | S.DIO 1SS355 TE-17 | B | 239.9/95.1 |
| D241 | 1730002281 | S.ZEN MAZ8091GML | T | 231.2/32.0 |
| D351 | 1790001251 | S.DIO MA2S1110GL | T | 129.8/83.2 |
| D450 | 1710000840 | S.DIO 1SR154-400 TE25 | B | 218.9/28.0 |
| D451 | 1710000840 | S.DIO 1SR154-400 TE25 | B | 153.4/16.0 |
| D452 | 1710000840 | S.DIO 1SR154-400 TE25 | B | 93.6/58.0 |
| D490 | 1790000620 | S.DIO MA77(TX) | B | 237.5/5.4 |
| D501 | 1790000620 | S.DIO MA77(TX) | B | 34.3/94.1 |
| D502 | 1790000620 | S.DIO MA77(TX) | B | 34.3/91.8 |
| D503 | 1790000620 | S.DIO MA77(TX) | B | 46.6/91.4 |
| D504 | 1790000620 | S.DIO MA77(TX) | B | 46.7/85.3 |
| D505 | 1750000431 | S.DIO HSB88WSTR-E | T | 70.2/90.8 |
| D506 | 1750000431 | S.DIO HSB88WSTR-E | T | 84.3/69.4 |
| D601 | 1790000620 | S.DIO MA77(TX) | B | 34.7/54.0 |
| D602 | 1790000620 | S.DIO MA77(TX) | B | 34.7/33.0 |
| D603 | 1790000620 | S.DIO MA77(TX) | B | 45.5/54.0 |
| D604 | 1790000620 | S.DIO MA77(TX) | B | 45.5/33.0 |
| D605 | 1790000620 | S.DIO MA77(TX) | B | 56.3/54.0 |
| D606 | 1790000620 | S.DIO MA77(TX) | B | 56.3/33.0 |
| D607 | 1790000620 | S.DIO MA77(TX) | B | 67.1/54.0 |
| D608 | 1790000620 | S.DIO MA77(TX) | B | 67.1/33.0 |
| D609 | 1790000620 | S.DIO MA77(TX) | B | 78.0/54.0 |
| D610 | 1790000620 | S.DIO MA77(TX) | B | 78.0/33.0 |
| D611 | 1790000620 | S.DIO MA77(TX) | T | 40.8/54.0 |
| D612 | 1790000620 | S.DIO MA77(TX) | T | 40.8/33.0 |
| D613 | 1790000620 | S.DIO MA77(TX) | T | 48.8/54.0 |
| D614 | 1790000620 | S.DIO MA77(TX) | T | 49.8/33.0 |
| D615 | 1790000620 | S.DIO MA77(TX) | T | 58.9/54.0 |
| D616 | 1790000620 | S.DIO MA77(TX) | T | 58.8/33.0 |
| D617 | 1790000620 | S.DIO MA77(TX) | T | 67.8/54.0 |
| D618 | 1790000620 | S.DIO MA77(TX) | T | 67.8/33.0 |
| D619 | 1790000620 | S.DIO MA77(TX) | T | 76.8/54.0 |
| D620 | 1790000620 | S.DIO MA77(TX) | T | 76.8/33.0 |
| D801 | 1790000620 | S.DIO MA77(TX) | T | 36.5/29.9 |
| D802 | 1750000581 | S.DIO 1SV307(TPH3F) | T | 34.7/29.9 |
| D806 | 1790000620 | S.DIO MA77(TX) | B | 84.2/76.6 |
| D820 | 1750000581 | S.DIO 1SV307(TPH3F) | T | 86.0/33.0 |
| | | | | |
| FI501 | 2020001070 | CER CFWLA455KDFA-B0 (CFWS455D) | | |
| FI502 | 2020001510 | CER CFWLA455KJFA-B0 (CFWS455IT) | | |
| FI503 | 2010002580 | S.FIL DSF753SB 64.455 MHz (FL-348) | T | 93.4/90.8 |
| | | | | |
| L1 | 6200003261 | S.COI NLV32T-101J | T | 186.7/100.6 |
| L2 | 6200003261 | S.COI NLV32T-101J | B | 183.8/77.2 |
| L3 | 6200003950 | S.COI HF50ACC 322513-T | T | 179.2/88.5 |
| L4 | 6200003261 | S.COI NLV32T-101J | T | 179.2/80.3 |
| L5 | 6200003261 | S.COI NLV32T-101J | T | 178.2/84.3 |
| L6 | 6200003261 | S.COI NLV32T-101J | T | 178.1/76.3 |
| L7 | 6200003950 | S.COI HF50ACC 322513-T | T | 208.2/109.6 |
| L8 | 6200003261 | S.COI NLV32T-101J | B | 200.4/110.3 |
| L9 | 6200003950 | S.COI HF50ACC 322513-T | B | 193.4/110.0 |
| L10 | 6200003261 | S.COI NLV32T-101J | B | 196.9/110.3 |
| L11 | 6200003261 | S.COI NLV32T-101J | B | 169.7/110.3 |
| L12 | 6200003261 | S.COI NLV32T-101J | B | 180.2/110.3 |
| L13 | 6200003950 | S.COI HF50ACC 322513-T | B | 162.7/110.3 |
| L14 | 6200003261 | S.COI NLV32T-101J | T | 176.7/109.7 |
| L15 | 6200003261 | S.COI NLV32T-101J | B | 183.7/110.3 |
| L16 | 6200003261 | S.COI NLV32T-101J | B | 173.2/110.3 |
| L17 | 6200003950 | S.COI HF50ACC 322513-T | T | 166.2/109.2 |
| L18 | 6200003261 | S.COI NLV32T-101J | B | 158.4/110.3 |
| L19 | 6200003950 | S.COI HF50ACC 322513-T | B | 151.4/110.0 |
| L20 | 6200003261 | S.COI NLV32T-101J | B | 154.9/110.3 |
| L21 | 6200003950 | S.COI HF50ACC 322513-T | B | 166.0/107.5 |
| L22 | 6200003950 | S.COI HF50ACC 322513-T | B | 163.0/107.5 |
| L50 | 6200003261 | S.COI NLV32T-101J | B | 139.6/122.6 |
| L51 | 6200003590 | S.COI EXCCL3225U1 | B | 154.3/111.3 |
| L52 | 6200003261 | S.COI NLV32T-101J | B | 151.3/107.3 |
| L54 | 6200003261 | S.COI NLV32T-101J | T | 50.8/64.3 |
| L55 | 6200003261 | S.COI NLV32T-101J | B | 119.3/33.6 |
| L56 | 6200003590 | S.COI EXCCL3225U1 | T | 116.2/44.6 |
| L140 | 6200003261 | S.COI NLV32T-101J | T | 219.7/48.1 |
| L141 | 2040000490 | COI EXC-ELDR25C | | |
| L142 | 2040000490 | COI EXC-ELDR25C | | |
| L143 | 2040000490 | COI EXC-ELDR25C | | |
| L180 | 6200003261 | S.COI NLV32T-101J | T | 186.9/44.6 |
| L181 | 6200003261 | S.COI NLV32T-101J | T | 181.2/40.1 |
| L201 | 6200003261 | S.COI NLV32T-101J | B | 61.9/112.1 |
| L210 | 6200003261 | S.COI NLV32T-101J | T | 156.1/85.2 |
| L250 | 6200003590 | S.COI EXCCL3225U1 | T | 134.6/55.7 |
| L290 | 6200003590 | S.COI EXCCL3225U1 | T | 152.0/28.2 |
| L330 | 6200001831 | S.COI NLV32T-100J | B | 161.4/68.9 |
| L331 | 6200001831 | S.COI NLV32T-100J | B | 164.8/68.9 |
| L340 | 6200003950 | S.COI HF50ACC 322513-T | B | 201.7/96.1 |
| L341 | 6200003950 | S.COI HF50ACC 322513-T | B | 195.5/96.1 |
| L360 | 6200003950 | S.COI HF50ACC 322513-T | B | 149.7/96.1 |
| L361 | 6200003950 | S.COI HF50ACC 322513-T | B | 143.5/96.1 |
| L380 | 6200003950 | S.COI HF50ACC 322513-T | B | 28.5/41.9 |
| L381 | 6200003950 | S.COI HF50ACC 322513-T | B | 28.5/48.1 |
| L400 | 6200003950 | S.COI HF50ACC 322513-T | T | 238.3/10.9 |
| L401 | 6200003950 | S.COI HF50ACC 322513-T | B | 234.1/11.3 |
| L402 | 6200003950 | S.COI HF50ACC 322513-T | B | 237.3/11.3 |
| L405 | 6200003950 | S.COI HF50ACC 322513-T | T | 40.3/11.3 |
| L406 | 6200003950 | S.COI HF50ACC 322513-T | T | 34.3/11.3 |
| L407 | 6200003950 | S.COI HF50ACC 322513-T | T | 37.3/11.3 |
| L410 | 6200003590 | S.COI EXCCL3225U1 | T | 11.0/41.0 |
| L411 | 6200003950 | S.COI HF50ACC 322513-T | B | 11.0/39.6 |

## [MAIN UNIT]

| REF NO. | PARTS NO. | DESCRIPTION | M. | H/V LOCATION |
|---|---|---|---|---|
| L412 | 6200003590 | S.COI EXCCL3225U1 | T | 11.0/38.0 |
| L413 | 6200003950 | S.COI HF50ACC 322513-T | B | 11.0/36.4 |
| L418 | 6200003950 | S.COI HF50ACC 322513-T | B | 11.1/97.2 |
| L435 | 6200003950 | S.COI HF50ACC 322513-T | B | 6.7/76.7 |
| L440 | 6200003950 | S.COI HF50ACC 322513-T | T | 164.1/12.7 |
| L441 | 6200003950 | S.COI HF50ACC 322513-T | T | 161.1/12.7 |
| L450 | 6200003590 | S.COI EXCCL3225U1 | B | 251.2/16.8 |
| L451 | 6170000150 | COI LW-16 | | |
| L452 | 6200003590 | S.COI EXCCL3225U1 | T | 250.2/25.4 |
| L453 | 6200003590 | S.COI EXCCL3225U1 | T | 250.2/28.4 |
| L454 | 6200009790 | S.COI BLM31PG121SN1 | B | 250.6/30.2 |
| L455 | 6200009790 | S.COI BLM31PG121SN1 | B | 250.6/32.5 |
| L456 | 6200003590 | S.COI EXCCL3225U1 | T | 250.4/39.6 |
| L480 | 6200003950 | S.COI HF50ACC 322513-T | B | 220.6/24.0 |
| L481 | 6200003950 | S.COI HF50ACC 322513-T | B | 149.8/17.1 |
| L482 | 6200003950 | S.COI HF50ACC 322513-T | B | 94.1/61.2 |
| L495 | 6200003191 | S.COI NLV32T-470J | B | 24.2/118.0 |
| L496 | 6200003191 | S.COI NLV32T-470J | B | 9.2/117.4 |
| L501 | 6200003261 | S.COI NLV32T-101J | T | 24.4/101.3 |
| L502 | 6200003261 | S.COI NLV32T-101J | T | 21.4/97.1 |
| L503 | 6200003261 | S.COI NLV32T-101J | T | 24.4/97.1 |
| L504 | 6200003520 | S.COI ELJFB 102K-F | T | 30.6/92.2 |
| L505 | 6150004090 | COI LS-469 (C-13969) | | |
| L507 | 6140003530 | COI LR-395 | | |
| L508 | 6140003210 | S.COI LR-358 | T | 75.9/90.8 |
| L509 | 6140003770 | S.COI LR-414 4KBL (STP-01435) | T | 85.2/90.8 |
| L510 | 6140003770 | S.COI LR-414 4KBL (STP-01435) | T | 101.6/90.8 |
| L511 | 6200003031 | S.COI NLV32T-R47J | B | 101.9/85.8 |
| L512 | 6150004280 | COI LS-484B (C-14927) | | |
| L513 | 6140002551 | S.COI #617DB-1919=P3 | T | 90.6/69.4 |
| L514 | 6140002551 | S.COI #617DB-1919=P3 | T | 78.0/69.4 |
| L515 | 6200003001 | S.COI NLV32T-R22J | T | 111.3/65.7 |
| L516 | 6200003021 | S.COI NLV32T-R33J | T | 102.8/71.4 |
| L517 | 6200001831 | S.COI NLV32T-100J | T | 99.4/73.5 |
| L518 | 6200010720 | S.COI C2520C-56NG-A | T | 71.2/69.1 |
| L519 | 6200010860 | S.COI C2520C-R10G-A (0.1U) | T | 67.6/70.3 |
| L521 | 6140003900 | COI LR-489 | | |
| L522 | 6140003890 | COI LR-488 | | |
| L523 | 6200010381 | S.COI ELJRE R15JFA | B | 90.6/76.8 |
| L524 | 6180002971 | S.COI NLV32T-068J | B | 102.6/63.5 |
| L525 | 6180002971 | S.COI NLV32T-068J | B | 100.7/67.3 |
| L526 | 6180002971 | S.COI NLV32T-068J | B | 97.0/67.2 |
| L527 | 6200010660 | S.COI C2520C-R15G-A (0.15U) | T | 64.0/71.7 |
| L528 | 6200003261 | S.COI NLV32T-101J | T | 33.6/96.3 |
| L529 | 6200010381 | S.COI ELJRE R15JFA | B | 93.2/78.1 |
| L601 | 6200003101 | S.COI NLV32T-3R9J | B | 38.2/53.1 |
| L602 | 6200003131 | S.COI NLV32T-120J | B | 34.7/49.6 |
| L603 | 6200003131 | S.COI NLV32T-120J | B | 38.9/43.2 |
| L604 | 6200003131 | S.COI NLV32T-120J | B | 34.7/37.4 |
| L605 | 6200003101 | S.COI NLV32T-3R9J | B | 38.2/33.8 |
| L606 | 6200002961 | S.COI NLV32T-4R7J | B | 49.0/53.1 |
| L607 | 6200001851 | S.COI NLV32T-5R6J | B | 45.5/49.6 |
| L608 | 6200001851 | S.COI NLV32T-5R6J | B | 49.7/43.5 |
| L609 | 6200001851 | S.COI NLV32T-5R6J | B | 45.5/37.4 |
| L610 | 6200002961 | S.COI NLV32T-4R7J | B | 49.0/33.8 |
| L611 | 6200002991 | S.COI NLV32T-2R2J | B | 59.8/53.1 |
| L612 | 6200003111 | S.COI NLV32T-6R8J | B | 56.3/49.6 |
| L613 | 6200003111 | S.COI NLV32T-6R8J | B | 60.5/43.5 |
| L614 | 6200003111 | S.COI NLV32T-6R8J | B | 56.3/37.4 |
| L615 | 6200002991 | S.COI NLV32T-2R2J | B | 59.8/33.8 |
| L616 | 6200002991 | S.COI NLV32T-2R2J | B | 70.7/53.1 |
| L617 | 6200003321 | S.COI NLV32T-3R3J | B | 67.1/49.6 |
| L618 | 6200003321 | S.COI NLV32T-3R3J | B | 71.3/43.5 |
| L619 | 6200003321 | S.COI NLV32T-3R3J | B | 67.1/37.4 |
| L620 | 6200002991 | S.COI NLV32T-2R2J | B | 70.6/33.8 |
| L621 | 6200003061 | S.COI NLV32T-1R2J | B | 81.5/53.1 |
| L622 | 6200003091 | S.COI NLV32T-2R7J | B | 78.0/49.6 |
| L623 | 6200003091 | S.COI NLV32T-2R7J | B | 82.2/43.5 |
| L624 | 6200003091 | S.COI NLV32T-2R7J | B | 78.0/37.4 |
| L625 | 6200003061 | S.COI NLV32T-1R2J | B | 81.5/33.8 |
| L626 | 6200003331 | S.COI NLV32T-1R0J | T | 37.8/50.0 |
| L627 | 6200003081 | S.COI NLV32T-1R8J | T | 40.8/50.0 |
| L628 | 6200003081 | S.COI NLV32T-1R8J | T | 40.2/43.5 |
| L629 | 6200003081 | S.COI NLV32T-1R8J | T | 40.8/36.9 |
| L630 | 6200003331 | S.COI NLV32T-1R0J | T | 37.8/36.9 |
| L631 | 6200003041 | S.COI NLV32T-R68J | T | 46.8/50.0 |
| L632 | 6200003071 | S.COI NLV32T-1R5J | T | 49.8/50.0 |
| L633 | 6200003071 | S.COI NLV32T-1R5J | T | 49.2/43.5 |
| L634 | 6200003071 | S.COI NLV32T-1R5J | T | 49.8/36.9 |
| L635 | 6200003041 | S.COI NLV32T-R68J | T | 46.8/36.9 |
| L636 | 6200002981 | S.COI NLV32T-R56J | T | 55.8/50.0 |
| L637 | 6200003051 | S.COI NLV32T-R82J | T | 58.9/50.0 |
| L638 | 6200003051 | S.COI NLV32T-R82J | T | 58.2/43.5 |
| L639 | 6200003051 | S.COI NLV32T-R82J | T | 58.8/36.9 |
| L640 | 6200002981 | S.COI NLV32T-R56J | T | 55.8/36.9 |
| L641 | 6200003021 | S.COI NLV32T-R33J | T | 64.8/50.0 |
| L642 | 6200003041 | S.COI NLV32T-R68J | T | 67.8/50.0 |
| L643 | 6200003041 | S.COI NLV32T-R68J | T | 67.2/43.5 |
| L644 | 6200003041 | S.COI NLV32T-R68J | T | 67.8/36.9 |
| L645 | 6200003021 | S.COI NLV32T-R33J | T | 64.8/36.9 |
| L646 | 6200005491 | S.COI NLV32T-331J | T | 79.8/50.0 |
| L647 | 6200007810 | S.COI LQH31HN95NK03L | T | 73.2/51.3 |
| L648 | 6200009810 | S.COI LQH31HNR61J03L | T | 76.8/50.0 |
| L649 | 6200009810 | S.COI LQH31HNR61J03L | T | 75.5/43.7 |
| L650 | 6200009810 | S.COI LQH31HNR61J03L | T | 76.8/36.9 |
| L651 | 6200007810 | S.COI LQH31HN95NK03L | B | 105.5/13.0 |
| L801 | 6200005491 | S.COI NLV32T-331J | B | 67.0/123.5 |
| L803 | 6140003970 | COI LR-494 | | |
| L804 | 6200003241 | S.COI NLV32T-221J | B | 49.2/26.0 |
| L820 | 6200003161 | S.COI NLV32T-270J | T | 86.6/48.4 |
| L821 | 6200003191 | S.COI NLV32T-470J | T | 85.8/44.9 |
| L822 | 6200003201 | S.COI NLV32T-560J | T | 86.6/39.8 |
| | | | | |
| R1 | 7030003550 | S.RES ERJ3GEYJ 822 V (8.2K) | B | 214.8/107.3 |

Eqv.= This component is equivalent to the REF No. component listed above, and may be substituted on parts orders and repairs.

M.=Mounted side (T: Mounted on the Top side, B: Mounted on the Bottom side)
S.=Surface mount

## [MAIN UNIT]

| REF NO. | PARTS NO. | DESCRIPTION | M. | H/V LOCATION |
|---|---|---|---|---|
| R2 | 7030003550 | S.RES ERJ3GEYJ 822 V (8.2K) | B | 174.1/104.9 |
| R3 | 7030003520 | S.RES ERJ3GEYJ 472 V (4.7K) | B | 161.1/103.9 |
| R4 | 7030003620 | S.RES ERJ3GEYJ 333 V (33K) | B | 161.1/101.1 |
| R5 | 7030003580 | S.RES ERJ3GEYJ 153 V (15K) | B | 161.9/99.1 |
| R6 | 7030003520 | S.RES ERJ3GEYJ 472 V (4.7K) | B | 161.8/93.8 |
| R7 | 7030003520 | S.RES ERJ3GEYJ 472 V (4.7K) | B | 172.2/104.2 |
| R8 | 7030003620 | S.RES ERJ3GEYJ 333 V (33K) | B | 170.6/101.2 |
| R9 | 7030003580 | S.RES ERJ3GEYJ 153 V (15K) | B | 172.8/100.4 |
| R10 | 7030003520 | S.RES ERJ3GEYJ 472 V (4.7K) | B | 172.7/95.1 |
| R11 | 7030009891 | S.RES ERA3YED 151V (150) | B | 167.1/94.5 |
| R12 | 7030003560 | S.RES ERJ3GEYJ 103 V (10K) | B | 167.1/96.3 |
| R13 | 7030003480 | S.RES ERJ3GEYJ 222 V (2.2K) | B | 148.7/106.9 |
| R14 | 7030003560 | S.RES ERJ3GEYJ 103 V (10K) | B | 146.9/106.9 |
| R15 | 7030003640 | S.RES ERJ3GEYJ 473 V (47K) | B | 145.1/110.4 |
| R16 | 7030003680 | S.RES ERJ3GEYJ 104 V (100K) | T | 224.8/77.8 |
| R17 | 7030003680 | S.RES ERJ3GEYJ 104 V (100K) | T | 223.4/77.8 |
| R18 | 7030003400 | S.RES ERJ3GEYJ 471 V (470) | T | 222.1/77.8 |
| R19 | 7030003680 | S.RES ERJ3GEYJ 104 V (100K) | T | 227.2/77.8 |
| R20 | 7030003680 | S.RES ERJ3GEYJ 104 V (100K) | T | 228.6/77.8 |
| R21 | 7030003400 | S.RES ERJ3GEYJ 471 V (470) | T | 230.0/77.8 |
| R22 | 7030003560 | S.RES ERJ3GEYJ 103 V (10K) | T | 180.8/69.7 |
| R23 | 7030003560 | S.RES ERJ3GEYJ 103 V (10K) | T | 181.6/67.8 |
| R24 | 7030003560 | S.RES ERJ3GEYJ 103 V (10K) | T | 182.3/69.7 |
| R25 | 7030003440 | S.RES ERJ3GEYJ 102 V (1K) | T | 181.6/71.6 |
| R26 | 7030003560 | S.RES ERJ3GEYJ 103 V (10K) | T | 193.3/69.7 |
| R27 | 7030003560 | S.RES ERJ3GEYJ 103 V (10K) | T | 192.5/67.8 |
| R28 | 7030003560 | S.RES ERJ3GEYJ 103 V (10K) | T | 191.8/69.7 |
| R29 | 7030003440 | S.RES ERJ3GEYJ 102 V (1K) | T | 192.5/71.6 |
| R30 | 7030003320 | S.RES ERJ3GEYJ 101 V (100) | T | 192.5/66.5 |
| R31 | 7030003560 | S.RES ERJ3GEYJ 103 V (10K) | T | 193.8/88.0 |
| R32 | 7030003560 | S.RES ERJ3GEYJ 103 V (10K) | T | 193.8/86.7 |
| R33 | 7030003560 | S.RES ERJ3GEYJ 103 V (10K) | B | 188.8/83.7 |
| R34 | 7030003440 | S.RES ERJ3GEYJ 102 V (1K) | T | 222.3/96.5 |
| R35 | 7030003580 | S.RES ERJ3GEYJ 153 V (15K) | T | 222.3/97.8 |
| R36 | 7030003580 | S.RES ERJ3GEYJ 153 V (15K) | T | 225.1/99.0 |
| R37 | 7030003320 | S.RES ERJ3GEYJ 101 V (100) | T | 219.7/97.8 |
| R38 | 7030003390 | S.RES ERJ3GEYJ 391 V (390) | T | 225.1/100.3 |
| R39 | 7030003440 | S.RES ERJ3GEYJ 102 V (1K) | T | 179.3/97.8 |
| R40 | 7030003580 | S.RES ERJ3GEYJ 153 V (15K) | T | 179.3/99.1 |
| R41 | 7030003580 | S.RES ERJ3GEYJ 153 V (15K) | T | 182.3/100.3 |
| R42 | 7030003320 | S.RES ERJ3GEYJ 101 V (100) | T | 176.5/99.1 |
| R43 | 7030003390 | S.RES ERJ3GEYJ 391 V (390) | T | 182.3/101.6 |
| R44 | 7030003320 | S.RES ERJ3GEYJ 101 V (100) | T | 181.6/66.5 |
| R47 | 7030003560 | S.RES ERJ3GEYJ 103 V (10K) | B | 185.5/83.7 |
| R49 | 7540000270 | S.ABS ERZVF2M201 | B | 110.1/123.5 |
| R50 | 7310003820 | TRI EVN-D2AA03 B14 | | |
| R51 | 7030003560 | S.RES ERJ3GEYJ 103 V (10K) | B | 152.0/123.2 |
| R52 | 7030003200 | S.RES ERJ3GEYJ 100 V (10) | B | 109.6/98.6 |
| R53 | 7030003390 | S.RES ERJ3GEYJ 391 V (390) | B | 118.6/102.4 |
| R54 | 7030003480 | S.RES ERJ3GEYJ 222 V (2.2K) | T | 89.9/109.6 |
| R55 | 7030003480 | S.RES ERJ3GEYJ 222 V (2.2K) | T | 91.3/109.6 |
| R56 | 7030003520 | S.RES ERJ3GEYJ 472 V (4.7K) | T | 88.4/109.6 |
| R57 | 7030003620 | S.RES ERJ3GEYJ 333 V (33K) | T | 86.1/109.9 |
| R58 | 7030003580 | S.RES ERJ3GEYJ 153 V (15K) | T | 83.5/109.9 |
| R59 | 7030003520 | S.RES ERJ3GEYJ 472 V (4.7K) | T | 85.4/107.6 |
| R60 | 7510001511 | S.THE NTCG16 4LH 223JT | B | 125.0/86.8 |
| R61 | 7030003660 | S.RES ERJ3GEYJ 683 V (68K) | B | 123.2/86.8 |
| R62 | 7030003480 | S.RES ERJ3GEYJ 222 V (2.2K) | B | 121.4/86.8 |
| R63 | 7030003680 | S.RES ERJ3GEYJ 104 V (100K) | B | 124.0/82.5 |
| R64 | 7030003560 | S.RES ERJ3GEYJ 103 V (10K) | B | 124.0/84.3 |
| R65 | 7030003720 | S.RES ERJ3GEYJ 224 V (220K) | B | 121.4/83.5 |
| R66 | 7030003320 | S.RES ERJ3GEYJ 101 V (100) | B | 121.4/80.2 |
| R67 | 7030005681 | S.RES ERA3YKD 473V (47K) | B | 105.3/90.5 |
| R68 | 7030008121 | S.RES ERA3YED 682V (6.8K) | B | 110.0/87.9 |
| R69 | 7310005370 | S.TRI EVM3VBQ2 470 | T | 108.9/90.0 |
| R70 | 7030008121 | S.RES ERA3YED 682V (6.8K) | B | 108.9/90.5 |
| R71 | 7030005681 | S.RES ERA3YKD 473V (47K) | B | 107.1/90.5 |
| R72 | 7030003740 | S.RES ERJ3GEYJ 334 V (330K) | B | 110.7/90.5 |
| R73 | 7030003520 | S.RES ERJ3GEYJ 472 V (4.7K) | T | 109.0/78.0 |
| R74 | 7030003720 | S.RES ERJ3GEYJ 224 V (220K) | B | 121.4/92.0 |
| R75 | 7030003600 | S.RES ERJ3GEYJ 223 V (22K) | T | 108.0/86.3 |
| R76 | 7030003620 | S.RES ERJ3GEYJ 333 V (33K) | T | 110.6/86.3 |
| R77 | 7030003720 | S.RES ERJ3GEYJ 224 V (220K) | B | 110.7/85.6 |
| R78 | 7030003680 | S.RES ERJ3GEYJ 104 V (100K) | T | 118.1/90.5 |
| R79 | 7310005430 | S.TRI EVM3VBE5 220K (220K) | T | 114.5/90.0 |
| R80 | 7030003680 | S.RES ERJ3GEYJ 104 V (100K) | T | 118.7/84.6 |
| R81 | 7310005430 | S.TRI EVM3VBE5 220K (220K) | T | 114.5/85.1 |
| R82 | 7310005420 | S.TRI EVM3VB15 100K (100K) | T | 114.5/80.2 |
| R83 | 7030003680 | S.RES ERJ3GEYJ 104 V (100K) | B | 116.6/79.2 |
| R84 | 7030003720 | S.RES ERJ3GEYJ 224 V (220K) | B | 116.6/81.0 |
| R85 | 7030009920 | S.RES ERJ3GEYJ 335 V (3.3M) | B | 113.3/81.0 |
| R86 | 7030003380 | S.RES ERJ3GEYJ 331 V (330) | B | 110.7/80.2 |
| R87 | 7030003320 | S.RES ERJ3GEYJ 101 V (100) | T | 116.1/77.8 |
| R88 | 7030003440 | S.RES ERJ3GEYJ 102 V (1K) | T | 123.0/95.8 |
| R89 | 7030003440 | S.RES ERJ3GEYJ 102 V (1K) | T | 125.6/93.2 |
| R90 | 7030003800 | S.RES ERJ3GEYJ 105 V (1M) | B | 129.6/85.8 |
| R91 | 7030003660 | S.RES ERJ3GEYJ 683 V (68K) | B | 129.6/88.6 |
| R92 | 7030003380 | S.RES ERJ3GEYJ 331 V (330) | B | 119.5/93.4 |
| R93 | 7310005390 | S.TRI EVM3VBQ3 4.7K (4.7K) | T | 108.9/80.4 |
| R94 | 7030003320 | S.RES ERJ3GEYJ 101 V (100) | B | 136.8/95.0 |
| R95 | 7030003840 | S.RES ERJ3GEYJ 225 V (2.2M) | B | 129.7/100.1 |
| R96 | 7030009920 | S.RES ERJ3GEYJ 335 V (3.3M) | B | 126.4/103.7 |
| R97 | 7030011040 | S.RES ERJ3GEYJ 685 V (6.8M) | B | 126.4/100.1 |
| R98 | 7030003320 | S.RES ERJ3GEYJ 101 V (100) | T | 122.8/90.9 |
| R99 | 7030000380 | S.RES MCR10EZHJ 1 K (102) | B | 126.2/89.4 |
| R100 | 7030003440 | S.RES ERJ3GEYJ 102 V (1K) | T | 216.4/79.1 |
| R101 | 7030003520 | S.RES ERJ3GEYJ 472 V (4.7K) | T | 210.7/79.1 |
| R102 | 7030003680 | S.RES ERJ3GEYJ 104 V (100K) | T | 212.0/79.1 |
| R103 | 7030003560 | S.RES ERJ3GEYJ 103 V (10K) | T | 215.7/77.0 |
| R104 | 7030003560 | S.RES ERJ3GEYJ 103 V (10K) | T | 214.3/70.0 |
| R105 | 7030003440 | S.RES ERJ3GEYJ 102 V (1K) | T | 206.8/79.1 |
| R106 | 7030003520 | S.RES ERJ3GEYJ 472 V (4.7K) | T | 201.1/79.1 |
| R107 | 7030003680 | S.RES ERJ3GEYJ 104 V (100K) | T | 202.4/79.1 |
| R108 | 7030003560 | S.RES ERJ3GEYJ 103 V (10K) | T | 206.1/77.0 |
| R109 | 7030003560 | S.RES ERJ3GEYJ 103 V (10K) | T | 205.1/70.0 |

## [MAIN UNIT]

| REF NO. | PARTS NO. | DESCRIPTION | M. | H/V LOCATION |
|---|---|---|---|---|
| R110 | 7030003560 | S.RES ERJ3GEYJ 103 V (10K) | T | 216.5/91.0 |
| R111 | 7030003560 | S.RES ERJ3GEYJ 103 V (10K) | T | 215.2/91.0 |
| R113 | 7030003440 | S.RES ERJ3GEYJ 102 V (1K) | T | 215.6/70.0 |
| R114 | 7030003560 | S.RES ERJ3GEYJ 103 V (10K) | T | 214.3/67.3 |
| R115 | 7030003440 | S.RES ERJ3GEYJ 102 V (1K) | T | 203.8/70.0 |
| R116 | 7030003560 | S.RES ERJ3GEYJ 103 V (10K) | T | 205.1/67.3 |
| R117 | 7030003620 | S.RES ERJ3GEYJ 333 V (33K) | T | 124.7/75.0 |
| R118 | 7030003680 | S.RES ERJ3GEYJ 104 V (100K) | T | 126.0/75.0 |
| R119 | 7030003560 | S.RES ERJ3GEYJ 103 V (10K) | B | 217.0/60.1 |
| R120 | 7030003560 | S.RES ERJ3GEYJ 103 V (10K) | B | 217.0/56.7 |
| R121 | 7030003610 | S.RES ERJ3GEYJ 273 V (27K) | T | 191.0/90.9 |
| R122 | 7030003610 | S.RES ERJ3GEYJ 273 V (27K) | T | 191.4/87.0 |
| R123 | 7030003520 | S.RES ERJ3GEYJ 472 V (4.7K) | T | 214.6/46.3 |
| R124 | 7030003520 | S.RES ERJ3GEYJ 472 V (4.7K) | T | 205.3/47.2 |
| R125 | 7030003320 | S.RES ERJ3GEYJ 101 V (100) | T | 213.6/48.8 |
| R126 | 7030003470 | S.RES ERJ3GEYJ 182 V (1.8K) | T | 167.3/61.4 |
| R127 | 7030003470 | S.RES ERJ3GEYJ 182 V (1.8K) | T | 167.3/62.8 |
| R128 | 7030003470 | S.RES ERJ3GEYJ 182 V (1.8K) | T | 167.3/64.1 |
| R129 | 7030003470 | S.RES ERJ3GEYJ 182 V (1.8K) | T | 167.3/65.4 |
| R130 | 7030003480 | S.RES ERJ3GEYJ 222 V (2.2K) | B | 219.8/57.7 |
| R131 | 7030003480 | S.RES ERJ3GEYJ 222 V (2.2K) | B | 219.6/59.3 |
| R132 | 7030000380 | S.RES MCR10EZHJ 1 K (102) | B | 123.5/92.6 |
| R133 | 7030003520 | S.RES ERJ3GEYJ 472 V (4.7K) | T | 230.6/61.6 |
| R134 | 7030003440 | S.RES ERJ3GEYJ 102 V (1K) | T | 232.2/65.3 |
| R135 | 7030003520 | S.RES ERJ3GEYJ 472 V (4.7K) | T | 232.0/53.0 |
| R136 | 7030003440 | S.RES ERJ3GEYJ 102 V (1K) | T | 232.0/51.7 |
| R137 | 7030003480 | S.RES ERJ3GEYJ 222 V (2.2K) | T | 232.2/64.0 |
| R138 | 7030003320 | S.RES ERJ3GEYJ 101 V (100) | B | 204.5/64.9 |
| R139 | 7030003640 | S.RES ERJ3GEYJ 473 V (47K) | T | 226.2/71.0 |
| R140 | 7030003640 | S.RES ERJ3GEYJ 473 V (47K) | T | 230.4/46.7 |
| R141 | 7030003560 | S.RES ERJ3GEYJ 103 V (10K) | B | 256.3/59.4 |
| R142 | 7030003640 | S.RES ERJ3GEYJ 473 V (47K) | B | 254.5/59.4 |
| R143 | 7030004040 | S.RES ERJ3GEYJ 4R7 V (4.7) | B | 252.5/98.6 |
| R144 | 7030004040 | S.RES ERJ3GEYJ 4R7 V (4.7) | B | 244.1/109.8 |
| R145 | 7030003440 | S.RES ERJ3GEYJ 102 V (1K) | T | 234.8/76.9 |
| R146 | 7510001511 | S.THE NTCG16 4LH 223JT | T | 232.2/76.9 |
| R147 | 7030003750 | S.RES ERJ3GEYJ 394 V (390K) | T | 233.7/75.6 |
| R149 | 7030003360 | S.RES ERJ3GEYJ 221 V (220) | B | 252.2/92.4 |
| R150 | 7030003360 | S.RES ERJ3GEYJ 221 V (220) | B | 243.8/92.4 |
| R151 | 7030003290 | S.RES ERJ3GEYJ 560 V (56) | T | 243.8/33.1 |
| R152 | 7030003320 | S.RES ERJ3GEYJ 101 V (100) | B | 215.1/71.9 |
| R154 | 7030003320 | S.RES ERJ3GEYJ 101 V (100) | T | 206.3/37.3 |
| R155 | 7030003640 | S.RES ERJ3GEYJ 473 V (47K) | T | 215.3/42.8 |
| R156 | 7030003640 | S.RES ERJ3GEYJ 473 V (47K) | T | 204.6/39.9 |
| R157 | 7030003480 | S.RES ERJ3GEYJ 222 V (2.2K) | T | 214.9/82.1 |
| R158 | 7030003480 | S.RES ERJ3GEYJ 222 V (2.2K) | T | 206.0/82.6 |
| R159 | 7030003440 | S.RES ERJ3GEYJ 102 V (1K) | T | 214.3/64.6 |
| R160 | 7030003440 | S.RES ERJ3GEYJ 102 V (1K) | T | 226.7/92.1 |
| R161 | 7030003480 | S.RES ERJ3GEYJ 222 V (2.2K) | T | 228.0/92.1 |
| R162 | 7030003680 | S.RES ERJ3GEYJ 104 V (100K) | T | 226.7/89.3 |
| R163 | 7030003570 | S.RES ERJ3GEYJ 123 V (12K) | T | 228.0/89.3 |
| R164 | 7030003680 | S.RES ERJ3GEYJ 104 V (100K) | T | 229.3/89.3 |
| R165 | 7030003680 | S.RES ERJ3GEYJ 104 V (100K) | T | 230.6/89.3 |
| R166 | 7030003400 | S.RES ERJ3GEYJ 471 V (470) | T | 231.9/89.3 |
| R167 | 7030003440 | S.RES ERJ3GEYJ 102 V (1K) | T | 225.4/92.1 |
| R168 | 7030003480 | S.RES ERJ3GEYJ 222 V (2.2K) | T | 224.1/92.1 |
| R169 | 7030003680 | S.RES ERJ3GEYJ 104 V (100K) | T | 225.4/89.3 |
| R170 | 7030003570 | S.RES ERJ3GEYJ 123 V (12K) | T | 224.1/89.3 |
| R171 | 7030003680 | S.RES ERJ3GEYJ 104 V (100K) | T | 222.8/89.3 |
| R172 | 7030003680 | S.RES ERJ3GEYJ 104 V (100K) | T | 221.5/89.3 |
| R173 | 7030003400 | S.RES ERJ3GEYJ 471 V (470) | T | 220.2/89.3 |
| R174 | 7030003440 | S.RES ERJ3GEYJ 102 V (1K) | T | 205.1/64.5 |
| R175 | 7030003860 | S.RES ERJ3GE JPW V | B | 192.6/39.5 |
| R176 | 7030003450 | S.RES ERJ3GEYJ 122 V (1.2K) | T | 107.9/82.8 |
| R180 | 7030003560 | S.RES ERJ3GEYJ 103 V (10K) | B | 190.2/57.0 |
| R181 | 7030003560 | S.RES ERJ3GEYJ 103 V (10K) | B | 191.8/57.0 |
| R183 | 7030003470 | S.RES ERJ3GEYJ 182 V (1.8K) | T | 167.3/60.1 |
| R184 | 7030003470 | S.RES ERJ3GEYJ 182 V (1.8K) | T | 167.3/58.8 |
| R185 | 7030003470 | S.RES ERJ3GEYJ 182 V (1.8K) | T | 167.3/57.5 |
| R186 | 7030003470 | S.RES ERJ3GEYJ 182 V (1.8K) | T | 167.3/56.2 |
| R187 | 7030003480 | S.RES ERJ3GEYJ 222 V (2.2K) | T | 180.9/57.9 |
| R188 | 7030003480 | S.RES ERJ3GEYJ 222 V (2.2K) | T | 180.9/56.6 |
| R189 | 7030003560 | S.RES ERJ3GEYJ 103 V (10K) | B | 188.9/43.4 |
| R190 | 7030003560 | S.RES ERJ3GEYJ 103 V (10K) | B | 188.9/40.6 |
| R191 | 7030003440 | S.RES ERJ3GEYJ 102 V (1K) | T | 194.1/35.7 |
| R192 | 7030003610 | S.RES ERJ3GEYJ 273 V (27K) | T | 192.0/34.9 |
| R193 | 7030003440 | S.RES ERJ3GEYJ 102 V (1K) | T | 178.4/41.4 |
| R194 | 7030003610 | S.RES ERJ3GEYJ 273 V (27K) | T | 181.7/35.5 |
| R195 | 7030003440 | S.RES ERJ3GEYJ 102 V (1K) | T | 191.3/44.9 |
| R196 | 7030003440 | S.RES ERJ3GEYJ 102 V (1K) | T | 183.4/48.1 |
| R197 | 7030003320 | S.RES ERJ3GEYJ 101 V (100) | T | 125.6/94.5 |
| R198 | 7030003640 | S.RES ERJ3GEYJ 473 V (47K) | T | 120.2/90.9 |
| R199 | 7030003520 | S.RES ERJ3GEYJ 472 V (4.7K) | T | 121.7/89.0 |
| R200 | 7030003560 | S.RES ERJ3GEYJ 103 V (10K) | B | 166.9/76.5 |
| R201 | 7030003560 | S.RES ERJ3GEYJ 103 V (10K) | T | 161.2/71.4 |
| R202 | 7030003520 | S.RES ERJ3GEYJ 472 V (4.7K) | T | 167.5/72.8 |
| R203 | 7030003720 | S.RES ERJ3GEYJ 224 V (220K) | T | 166.2/73.5 |
| R204 | 7030003320 | S.RES ERJ3GEYJ 101 V (100) | T | 142.2/67.8 |
| R205 | 7030003320 | S.RES ERJ3GEYJ 101 V (100) | B | 148.3/70.0 |
| R208 | 7030003440 | S.RES ERJ3GEYJ 102 V (1K) | T | 147.2/75.9 |
| R211 | 7030003560 | S.RES ERJ3GEYJ 103 V (10K) | T | 162.7/93.7 |
| R212 | 7030003520 | S.RES ERJ3GEYJ 472 V (4.7K) | T | 165.1/91.5 |
| R213 | 7030003440 | S.RES ERJ3GEYJ 102 V (1K) | T | 165.1/94.1 |
| R214 | 7030003600 | S.RES ERJ3GEYJ 223 V (22K) | B | 152.9/84.5 |
| R216 | 7030003620 | S.RES ERJ3GEYJ 333 V (33K) | B | 152.9/82.7 |
| R218 | 7030003580 | S.RES ERJ3GEYJ 153 V (15K) | T | 138.3/85.3 |
| R221 | 7030003560 | S.RES ERJ3GEYJ 103 V (10K) | T | 158.5/93.7 |
| R222 | 7030003520 | S.RES ERJ3GEYJ 472 V (4.7K) | T | 155.9/91.5 |
| R223 | 7030003440 | S.RES ERJ3GEYJ 102 V (1K) | T | 155.9/94.1 |
| R224 | 7030003600 | S.RES ERJ3GEYJ 223 V (22K) | B | 152.9/89.3 |
| R226 | 7030003620 | S.RES ERJ3GEYJ 333 V (33K) | B | 152.9/87.5 |
| R228 | 7030003580 | S.RES ERJ3GEYJ 153 V (15K) | T | 138.3/90.2 |
| R230 | 7030003320 | S.RES ERJ3GEYJ 101 V (100) | T | 66.5/5.7 |
| R231 | 7030003320 | S.RES ERJ3GEYJ 101 V (100) | T | 74.0/23.9 |
| R232 | 7030003680 | S.RES ERJ3GEYJ 104 V (100K) | T | 74.3/20.4 |

Eqv.= This component is equivalent to the REF No. component listed above, and may be substituted on parts orders and repairs.

M.=Mounted side (T: Mounted on the Top side, B: Mounted on the Bottom side)
S.=Surface mount

## [MAIN UNIT]

| REF NO. | PARTS NO. | DESCRIPTION | M. | H/V LOCATION |
|---|---|---|---|---|
| R233 | 7030003560 | S.RES ERJ3GEYJ 103 V (10K) | T | 76.5/22.0 |
| R234 | 7030003320 | S.RES ERJ3GEYJ 101 V (100) | T | 73.3/17.2 |
| R235 | 7030003860 | S.RES ERJ3GE JPW V | T | 155.9/58.5 |
| R240 | 7030003420 | S.RES ERJ3GEYJ 681 V (680) | T | 177.1/58.1 |
| R241 | 7030003360 | S.RES ERJ3GEYJ 221 V (220) | T | 233.5/35.3 |
| R242 | 7030003440 | S.RES ERJ3GEYJ 102 V (1K) | T | 233.4/32.7 |
| R243 | 7030003440 | S.RES ERJ3GEYJ 102 V (1K) | T | 213.8/40.2 |
| R244 | 7030003440 | S.RES ERJ3GEYJ 102 V (1K) | T | 217.2/43.6 |
| R245 | 7030003540 | S.RES ERJ3GEYJ 682 V (6.8K) | T | 215.3/44.3 |
| R246 | 7030003440 | S.RES ERJ3GEYJ 102 V (1K) | T | 205.3/41.8 |
| R247 | 7030003440 | S.RES ERJ3GEYJ 102 V (1K) | T | 204.0/44.6 |
| R248 | 7030003540 | S.RES ERJ3GEYJ 682 V (6.8K) | T | 205.3/44.6 |
| R249 | 7030003560 | S.RES ERJ3GEYJ 103 V (10K) | T | 163.3/70.9 |
| R250 | 7030003200 | S.RES ERJ3GEYJ 100 V (10) | B | 117.1/28.7 |
| R251 | 7030003200 | S.RES ERJ3GEYJ 100 V (10) | B | 117.8/30.1 |
| R252 | 7030003200 | S.RES ERJ3GEYJ 100 V (10) | B | 117.1/31.5 |
| R253 | 7030003200 | S.RES ERJ3GEYJ 100 V (10) | B | 117.8/32.9 |
| R254 | 7030003200 | S.RES ERJ3GEYJ 100 V (10) | B | 117.1/34.3 |
| R255 | 7030003200 | S.RES ERJ3GEYJ 100 V (10) | B | 117.8/35.7 |
| R256 | 7030003200 | S.RES ERJ3GEYJ 100 V (10) | B | 117.1/37.1 |
| R257 | 7030003200 | S.RES ERJ3GEYJ 100 V (10) | B | 117.8/38.5 |
| R258 | 7030003560 | S.RES ERJ3GEYJ 103 V (10K) | B | 120.4/28.7 |
| R259 | 7030003560 | S.RES ERJ3GEYJ 103 V (10K) | B | 121.2/30.1 |
| R260 | 7030003560 | S.RES ERJ3GEYJ 103 V (10K) | B | 120.4/31.5 |
| R261 | 7030003560 | S.RES ERJ3GEYJ 103 V (10K) | B | 121.2/32.9 |
| R262 | 7030003560 | S.RES ERJ3GEYJ 103 V (10K) | B | 120.4/34.3 |
| R263 | 7030003560 | S.RES ERJ3GEYJ 103 V (10K) | B | 121.2/35.7 |
| R264 | 7030003560 | S.RES ERJ3GEYJ 103 V (10K) | B | 120.4/37.1 |
| R265 | 7030003560 | S.RES ERJ3GEYJ 103 V (10K) | B | 121.2/38.5 |
| R270 | 7030003200 | S.RES ERJ3GEYJ 100 V (10) | B | 120.6/42.8 |
| R271 | 7030003200 | S.RES ERJ3GEYJ 100 V (10) | B | 121.3/44.2 |
| R272 | 7030003200 | S.RES ERJ3GEYJ 100 V (10) | B | 120.6/45.6 |
| R273 | 7030003200 | S.RES ERJ3GEYJ 100 V (10) | B | 121.3/47.0 |
| R274 | 7030003200 | S.RES ERJ3GEYJ 100 V (10) | B | 120.6/48.4 |
| R275 | 7030003200 | S.RES ERJ3GEYJ 100 V (10) | B | 121.3/49.8 |
| R276 | 7030003200 | S.RES ERJ3GEYJ 100 V (10) | B | 120.6/51.2 |
| R277 | 7030003200 | S.RES ERJ3GEYJ 100 V (10) | B | 124.2/54.7 |
| R278 | 7030003560 | S.RES ERJ3GEYJ 103 V (10K) | B | 124.3/42.8 |
| R279 | 7030003560 | S.RES ERJ3GEYJ 103 V (10K) | B | 125.0/44.2 |
| R280 | 7030003560 | S.RES ERJ3GEYJ 103 V (10K) | B | 124.3/45.6 |
| R281 | 7030003560 | S.RES ERJ3GEYJ 103 V (10K) | B | 125.0/47.0 |
| R282 | 7030003560 | S.RES ERJ3GEYJ 103 V (10K) | B | 124.3/48.4 |
| R283 | 7030003560 | S.RES ERJ3GEYJ 103 V (10K) | B | 125.0/49.8 |
| R284 | 7030003560 | S.RES ERJ3GEYJ 103 V (10K) | B | 124.3/51.2 |
| R285 | 7030003560 | S.RES ERJ3GEYJ 103 V (10K) | B | 125.0/52.6 |
| R290 | 7030003200 | S.RES ERJ3GEYJ 100 V (10) | B | 164.1/41.5 |
| R291 | 7030003200 | S.RES ERJ3GEYJ 100 V (10) | B | 164.1/39.7 |
| R292 | 7030003200 | S.RES ERJ3GEYJ 100 V (10) | B | 164.1/37.9 |
| R293 | 7030003200 | S.RES ERJ3GEYJ 100 V (10) | B | 164.1/36.1 |
| R294 | 7030003200 | S.RES ERJ3GEYJ 100 V (10) | B | 164.1/34.3 |
| R295 | 7030003200 | S.RES ERJ3GEYJ 100 V (10) | B | 164.1/32.5 |
| R296 | 7030003200 | S.RES ERJ3GEYJ 100 V (10) | B | 164.1/30.7 |
| R298 | 7030003560 | S.RES ERJ3GEYJ 103 V (10K) | B | 160.8/41.5 |
| R299 | 7030003560 | S.RES ERJ3GEYJ 103 V (10K) | B | 160.8/39.7 |
| R300 | 7030003560 | S.RES ERJ3GEYJ 103 V (10K) | B | 160.8/37.9 |
| R301 | 7030003560 | S.RES ERJ3GEYJ 103 V (10K) | B | 160.8/36.1 |
| R302 | 7030003560 | S.RES ERJ3GEYJ 103 V (10K) | B | 160.8/34.3 |
| R303 | 7030003560 | S.RES ERJ3GEYJ 103 V (10K) | B | 160.8/32.5 |
| R304 | 7030003560 | S.RES ERJ3GEYJ 103 V (10K) | B | 160.8/30.7 |
| R310 | 7030003200 | S.RES ERJ3GEYJ 100 V (10) | B | 166.1/55.9 |
| R311 | 7030003200 | S.RES ERJ3GEYJ 100 V (10) | B | 163.6/54.1 |
| R312 | 7030003200 | S.RES ERJ3GEYJ 100 V (10) | B | 164.1/52.3 |
| R313 | 7030003200 | S.RES ERJ3GEYJ 100 V (10) | B | 164.1/50.5 |
| R314 | 7030003200 | S.RES ERJ3GEYJ 100 V (10) | B | 164.1/48.7 |
| R315 | 7030003200 | S.RES ERJ3GEYJ 100 V (10) | B | 164.1/46.9 |
| R316 | 7030003200 | S.RES ERJ3GEYJ 100 V (10) | B | 164.1/45.1 |
| R317 | 7030003200 | S.RES ERJ3GEYJ 100 V (10) | B | 164.1/43.3 |
| R318 | 7030003560 | S.RES ERJ3GEYJ 103 V (10K) | B | 162.1/55.9 |
| R319 | 7030003560 | S.RES ERJ3GEYJ 103 V (10K) | B | 160.3/54.1 |
| R320 | 7030003560 | S.RES ERJ3GEYJ 103 V (10K) | B | 160.8/52.3 |
| R321 | 7030003560 | S.RES ERJ3GEYJ 103 V (10K) | B | 160.8/50.5 |
| R322 | 7030003560 | S.RES ERJ3GEYJ 103 V (10K) | B | 160.8/48.7 |
| R323 | 7030003560 | S.RES ERJ3GEYJ 103 V (10K) | B | 160.8/46.9 |
| R324 | 7030003560 | S.RES ERJ3GEYJ 103 V (10K) | B | 160.8/45.1 |
| R325 | 7030003560 | S.RES ERJ3GEYJ 103 V (10K) | B | 160.8/43.3 |
| R330 | 7030009891 | S.RES ERA3YED 151V (150) | T | 155.0/65.5 |
| R331 | 7030009851 | S.RES ERA3YED 271V (270) | T | 152.4/65.5 |
| R341 | 7030003520 | S.RES ERJ3GEYJ 472 V (4.7K) | B | 199.9/27.5 |
| R342 | 7030004050 | S.RES ERJ3GEYJ 1R0 V (1) | T | 214.6/28.5 |
| R351 | 7030003680 | S.RES ERJ3GEYJ 104 V (100K) | T | 129.6/81.7 |
| R352 | 7030003640 | S.RES ERJ3GEYJ 473 V (47K) | T | 132.5/83.2 |
| R353 | 7030003560 | S.RES ERJ3GEYJ 103 V (10K) | T | 134.8/83.7 |
| R361 | 7030003520 | S.RES ERJ3GEYJ 472 V (4.7K) | B | 144.8/26.2 |
| R362 | 7030004050 | S.RES ERJ3GEYJ 1R0 V (1) | T | 157.8/16.6 |
| R381 | 7030004050 | S.RES ERJ3GEYJ 1R0 V (1) | T | 93.7/50.7 |
| R397 | 7030003410 | S.RES ERJ3GEYJ 561 V (560) | B | 108.3/36.7 |
| R398 | 7030007860 | S.RES ERJ3GEYJ 8R2V (8.2) | B | 110.2/38.7 |
| R399 | 7030003410 | S.RES ERJ3GEYJ 561 V (560) | B | 108.3/39.6 |
| R400 | 7030003360 | S.RES ERJ3GEYJ 221 V (220) | T | 228.3/9.9 |
| R401 | 7030003360 | S.RES ERJ3GEYJ 221 V (220) | B | 227.3/9.9 |
| R402 | 7030003360 | S.RES ERJ3GEYJ 221 V (220) | T | 226.3/9.9 |
| R403 | 7030003360 | S.RES ERJ3GEYJ 221 V (220) | T | 28.3/9.9 |
| R404 | 7030003360 | S.RES ERJ3GEYJ 221 V (220) | T | 27.0/9.9 |
| R405 | 7030003360 | S.RES ERJ3GEYJ 221 V (220) | T | 25.7/9.9 |
| R410 | 7030003320 | S.RES ERJ3GEYJ 101 V (100) | T | 9.9/56.0 |
| R413 | 7030003320 | S.RES ERJ3GEYJ 101 V (100) | B | 9.9/53.0 |
| R414 | 7030003320 | S.RES ERJ3GEYJ 101 V (100) | T | 9.9/52.0 |
| R415 | 7030003320 | S.RES ERJ3GEYJ 101 V (100) | B | 9.9/51.0 |
| R416 | 7030003320 | S.RES ERJ3GEYJ 101 V (100) | T | 9.9/50.0 |
| R417 | 7030003320 | S.RES ERJ3GEYJ 101 V (100) | B | 9.9/47.0 |
| R418 | 7030003320 | S.RES ERJ3GEYJ 101 V (100) | T | 9.9/46.0 |
| R419 | 7030003320 | S.RES ERJ3GEYJ 101 V (100) | B | 9.9/45.0 |
| R420 | 7030003320 | S.RES ERJ3GEYJ 101 V (100) | T | 9.9/44.0 |
| R421 | 7030003320 | S.RES ERJ3GEYJ 101 V (100) | B | 9.9/43.0 |
| R422 | 7030003320 | S.RES ERJ3GEYJ 101 V (100) | T | 9.9/32.0 |

## [MAIN UNIT]

| REF NO. | PARTS NO. | DESCRIPTION | M. | H/V LOCATION |
|---|---|---|---|---|
| R423 | 7030003320 | S.RES ERJ3GEYJ 101 V (100) | T | 9.9/30.0 |
| R424 | 7030003320 | S.RES ERJ3GEYJ 101 V (100) | B | 9.9/29.0 |
| R450 | 7030003600 | S.RES ERJ3GEYJ 223 V (22K) | B | 205.8/28.0 |
| R451 | 7030003600 | S.RES ERJ3GEYJ 223 V (22K) | B | 166.9/18.4 |
| R452 | 7030003600 | S.RES ERJ3GEYJ 223 V (22K) | B | 94.3/43.7 |
| R460 | 7030003560 | S.RES ERJ3GEYJ 103 V (10K) | B | 144.4/79.4 |
| R461 | 7030003560 | S.RES ERJ3GEYJ 103 V (10K) | B | 144.2/73.6 |
| R462 | 7030003580 | S.RES ERJ3GEYJ 153 V (15K) | T | 79.1/23.3 |
| R463 | 7030003560 | S.RES ERJ3GEYJ 103 V (10K) | T | 158.6/71.4 |
| R466 | 7030003440 | S.RES ERJ3GEYJ 102 V (1K) | T | 73.7/22.2 |
| R467 | 7030003320 | S.RES ERJ3GEYJ 101 V (100) | B | 148.3/73.6 |
| R468 | 7030003620 | S.RES ERJ3GEYJ 333 V (33K) | T | 142.2/77.4 |
| R469 | 7030003520 | S.RES ERJ3GEYJ 472 V (4.7K) | T | 143.0/75.7 |
| R470 | 7030003620 | S.RES ERJ3GEYJ 333 V (33K) | T | 165.9/78.4 |
| R471 | 7030003440 | S.RES ERJ3GEYJ 102 V (1K) | T | 152.2/67.8 |
| R472 | 7030003640 | S.RES ERJ3GEYJ 473 V (47K) | T | 165.9/77.1 |
| R474 | 7030003600 | S.RES ERJ3GEYJ 223 V (22K) | T | 132.5/75.3 |
| R476 | 7030003760 | S.RES ERJ3GEYJ 474 V (470K) | T | 126.5/77.5 |
| R479 | 7030003550 | S.RES ERJ3GEYJ 822 V (8.2K) | B | 170.5/73.6 |
| R481 | 7030003860 | S.RES ERJ3GE JPW V | B | 170.5/70.8 |
| R482 | 7030000010 | S.RES MCR10EZHJ JPW (000) | B | 108.8/46.0 |
| R483 | 7030000010 | S.RES MCR10EZHJ JPW (000) | B | 206.6/18.3 |
| R484 | 7030000010 | S.RES MCR10EZHJ JPW (000) | B | 151.6/27.6 |
| R485 | 7030003860 | S.RES ERJ3GE JPW V | T | 9.9/48.0 |
| R486 | 7030003860 | S.RES ERJ3GE JPW V | B | 9.9/49.0 |
| R487 | 7030000010 | S.RES MCR10EZHJ JPW (000) | T | 9.9/58.1 |
| R488 | 7030003860 | S.RES ERJ3GE JPW V | B | 111.4/76.2 |
| R489 | 7030003500 | S.RES ERJ3GEYJ 332 V (3.3K) | B | 229.0/6.0 |
| R490 | 7030003440 | S.RES ERJ3GEYJ 102 V (1K) | B | 159.4/63.3 |
| R491 | 7030003560 | S.RES ERJ3GEYJ 103 V (10K) | B | 157.7/59.6 |
| R492 | 7030003560 | S.RES ERJ3GEYJ 103 V (10K) | B | 159.5/59.6 |
| R493 | 7030003410 | S.RES ERJ3GEYJ 561 V (560) | T | 130.7/103.0 |
| R494 | 7030005331 | S.RES ERA3YED 562V (5.6K) | T | 218.5/78.6 |
| R495 | 7030010480 | S.RES ERJ1TYJ 181U (180) | T | 212.4/2.4 |
| R496 | 7030005331 | S.RES ERA3YED 562V (5.6K) | T | 218.5/77.3 |
| R497 | 7030007911 | S.RES ERA3YKD 563V (56K) | B | 228.6/16.1 |
| R498 | 7030005631 | S.RES ERA3YKD 154V (150K) | B | 228.6/20.3 |
| R499 | 7030005631 | S.RES ERA3YKD 154V (150K) | B | 230.4/20.3 |
| R501 | 7030003440 | S.RES ERJ3GEYJ 102 V (1K) | T | 20.7/58.3 |
| R502 | 7030003560 | S.RES ERJ3GEYJ 103 V (10K) | T | 19.2/60.9 |
| R503 | 7030003440 | S.RES ERJ3GEYJ 102 V (1K) | T | 22.2/58.3 |
| R504 | 7030003440 | S.RES ERJ3GEYJ 102 V (1K) | T | 23.7/60.9 |
| R505 | 7030003320 | S.RES ERJ3GEYJ 101 V (100) | T | 26.0/61.7 |
| R506 | 7030003320 | S.RES ERJ3GEYJ 101 V (100) | T | 16.1/70.6 |
| R507 | 7030003440 | S.RES ERJ3GEYJ 102 V (1K) | T | 22.2/72.4 |
| R508 | 7030003440 | S.RES ERJ3GEYJ 102 V (1K) | T | 23.7/72.4 |
| R509 | 7030003320 | S.RES ERJ3GEYJ 101 V (100) | T | 26.7/72.4 |
| R510 | 7030003320 | S.RES ERJ3GEYJ 101 V (100) | T | 19.2/81.2 |
| R511 | 7030003320 | S.RES ERJ3GEYJ 101 V (100) | T | 21.4/87.5 |
| R512 | 7030003650 | S.RES ERJ3GEYJ 563 V (56K) | B | 228.2/3.1 |
| R513 | 7030003860 | S.RES ERJ3GE JPW V | T | 103.9/68.7 |
| R514 | 7030003440 | S.RES ERJ3GEYJ 102 V (1K) | T | 19.2/96.4 |
| R515 | 7030003410 | S.RES ERJ3GEYJ 561 V (560) | T | 26.6/96.4 |
| R516 | 7030003440 | S.RES ERJ3GEYJ 102 V (1K) | T | 25.3/84.6 |
| R517 | 7030003520 | S.RES ERJ3GEYJ 472 V (4.7K) | T | 23.2/84.6 |
| R518 | 7030003400 | S.RES ERJ3GEYJ 471 V (470) | B | 20.1/91.9 |
| R519 | 7030003560 | S.RES ERJ3GEYJ 103 V (10K) | B | 20.1/89.0 |
| R520 | 7030003630 | S.RES ERJ3GEYJ 393 V (39K) | B | 24.3/91.9 |
| R521 | 7030003600 | S.RES ERJ3GEYJ 223 V (22K) | B | 24.3/87.7 |
| R522 | 7030003200 | S.RES ERJ3GEYJ 100 V (10) | B | 230.4/24.8 |
| R523 | 7030003360 | S.RES ERJ3GEYJ 221 V (220) | B | 27.9/87.7 |
| R524 | 7030003560 | S.RES ERJ3GEYJ 103 V (10K) | B | 27.1/93.9 |
| R525 | 7030003480 | S.RES ERJ3GEYJ 222 V (2.2K) | B | 31.3/91.9 |
| R526 | 7030003440 | S.RES ERJ3GEYJ 102 V (1K) | B | 31.3/98.2 |
| R527 | 7030003560 | S.RES ERJ3GEYJ 103 V (10K) | B | 31.3/94.9 |
| R528 | 7030003560 | S.RES ERJ3GEYJ 103 V (10K) | B | 34.3/96.2 |
| R529 | 7030003560 | S.RES ERJ3GEYJ 103 V (10K) | B | 34.3/89.7 |
| R530 | 7030003560 | S.RES ERJ3GEYJ 103 V (10K) | B | 48.1/95.1 |
| R531 | 7030003560 | S.RES ERJ3GEYJ 103 V (10K) | B | 48.1/82.0 |
| R532 | 7030003440 | S.RES ERJ3GEYJ 102 V (1K) | B | 40.9/91.4 |
| R533 | 7030003560 | S.RES ERJ3GEYJ 103 V (10K) | B | 44.5/91.4 |
| R534 | 7030003560 | S.RES ERJ3GEYJ 103 V (10K) | T | 49.1/79.5 |
| R535 | 7030003440 | S.RES ERJ3GEYJ 102 V (1K) | B | 49.9/82.0 |
| R536 | 7030003490 | S.RES ERJ3GEYJ 272 V (2.7K) | B | 48.7/85.7 |
| R537 | 7030003320 | S.RES ERJ3GEYJ 101 V (100) | T | 53.5/84.4 |
| R538 | 7310005400 | S.TRI EVM3VBE4 22K (22K) | T | 49.4/90.7 |
| R539 | 7030003400 | S.RES ERJ3GEYJ 471 V (470) | B | 51.7/95.1 |
| R540 | 7030003220 | S.RES ERJ3GEYJ 150 V (15) | B | 66.4/96.1 |
| R541 | 7030003380 | S.RES ERJ3GEYJ 331 V (330) | B | 64.3/96.9 |
| R543 | 7030003380 | S.RES ERJ3GEYJ 331 V (330) | B | 64.3/95.3 |
| R544 | 7030005671 | S.RES ERA3YKD 393V (39K) | B | 229.4/17.7 |
| R545 | 7030004030 | S.RES ERJ3GEYJ 5R6 V (5.6) | B | 59.9/93.8 |
| R546 | 7030003430 | S.RES ERJ3GEYJ 821 V (820) | B | 58.7/90.7 |
| R547 | 7030003430 | S.RES ERJ3GEYJ 821 V (820) | B | 61.1/90.7 |
| R548 | 7030004030 | S.RES ERJ3GEYJ 5R6 V (5.6) | B | 80.6/93.8 |
| R549 | 7030003560 | S.RES ERJ3GEYJ 103 V (10K) | T | 129.5/104.6 |
| R550 | 7030003560 | S.RES ERJ3GEYJ 103 V (10K) | T | 132.8/106.5 |
| R551 | 7030003680 | S.RES ERJ3GEYJ 104 V (100K) | T | 188.5/106.1 |
| R552 | 7030004040 | S.RES ERJ3GEYJ 4R7 V (4.7) | B | 101.6/88.7 |
| R553 | 7030009891 | S.RES ERA3YED 151V (150) | B | 108.3/85.2 |
| R554 | 7030003440 | S.RES ERJ3GEYJ 102 V (1K) | B | 105.6/85.2 |
| R555 | 7510001491 | S.THE NTCG16 3NH 681JT | B | 103.8/78.0 |
| R556 | 7030003480 | S.RES ERJ3GEYJ 222 V (2.2K) | B | 103.8/80.6 |
| R557 | 7030005331 | S.RES ERA3YED 562V (5.6K) | B | 229.5/23.0 |
| R558 | 7030003320 | S.RES ERJ3GEYJ 101 V (100) | B | 102.9/74.8 |
| R559 | 7030003680 | S.RES ERJ3GEYJ 104 V (100K) | T | 132.8/105.2 |
| R560 | 7030003680 | S.RES ERJ3GEYJ 104 V (100K) | T | 188.5/103.4 |
| R561 | 7030003680 | S.RES ERJ3GEYJ 104 V (100K) | T | 133.6/102.4 |
| R562 | 7030003320 | S.RES ERJ3GEYJ 101 V (100) | B | 77.5/69.5 |
| R563 | 7030003300 | S.RES ERJ3GEYJ 680 V (68) | T | 110.0/62.7 |
| R564 | 7030003620 | S.RES ERJ3GEYJ 333 V (33K) | T | 107.1/64.2 |
| R565 | 7030003640 | S.RES ERJ3GEYJ 473 V (47K) | B | 234.6/4.6 |
| R566 | 7030003330 | S.RES ERJ3GEYJ 121 V (120) | T | 102.8/74.1 |
| R567 | 7030003230 | S.RES ERJ3GEYJ 180 V (18) | B | 91.4/67.6 |
| R568 | 7030009851 | S.RES ERA3YED 271V (270) | B | 93.4/66.8 |

Eqv.= This component is equivalent to the REF No. component listed above, and may be substituted on parts orders and repairs.

M.=Mounted side (T: Mounted on the Top side, B: Mounted on the Bottom side)
S.=Surface mount

## [MAIN UNIT]

| REF NO. | PARTS NO. | DESCRIPTION | M. | H/V LOCATION |
|---|---|---|---|---|
| R569 | 7030009851 | S.RES ERA3YED 271V (270) | B | 89.3/66.8 |
| R570 | 7030003520 | S.RES ERJ3GEYJ 472 V (4.7K) | T | 59.9/60.7 |
| R571 | 7030003560 | S.RES ERJ3GEYJ 103 V (10K) | B | 64.5/59.2 |
| R572 | 7030004040 | S.RES ERJ3GEYJ 4R7 V (4.7) | T | 61.5/68.2 |
| R573 | 7030003400 | S.RES ERJ3GEYJ 471 V (470) | B | 68.2/59.2 |
| R574 | 7030003280 | S.RES ERJ3GEYJ 470 V (47) | T | 69.8/63.8 |
| R575 | 7030009851 | S.RES ERA3YED 271V (270) | B | 56.7/59.3 |
| R576 | 7030003230 | S.RES ERJ3GEYJ 180 V (18) | B | 54.6/58.5 |
| R577 | 7030009851 | S.RES ERA3YED 271V (270) | B | 56.7/57.7 |
| R578 | 7030003230 | S.RES ERJ3GEYJ 180 V (18) | B | 61.6/72.0 |
| R579 | 7030009851 | S.RES ERA3YED 271V (270) | B | 58.0/72.9 |
| R580 | 7030009851 | S.RES ERA3YED 271V (270) | B | 58.0/71.1 |
| R581 | 7030003430 | S.RES ERJ3GEYJ 821 V (820) | B | 92.6/73.0 |
| R582 | 7030004030 | S.RES ERJ3GEYJ 5R6 V (5.6) | B | 91.8/70.9 |
| R583 | 7030003430 | S.RES ERJ3GEYJ 821 V (820) | B | 94.2/70.8 |
| R584 | 7510001671 | S.THR NTCG16 4BH 103JT | T | 218.5/79.9 |
| R585 | 7030003600 | S.RES ERJ3GEYJ 223 V (22K) | B | 25.0/89.8 |
| R587 | 7030003200 | S.RES ERJ3GEYJ 100 V (10) | B | 61.5/68.1 |
| R589 | 7030003400 | S.RES ERJ3GEYJ 471 V (470) | B | 64.6/63.8 |
| R590 | 7030003430 | S.RES ERJ3GEYJ 821 V (820) | B | 79.8/91.7 |
| R591 | 7030003430 | S.RES ERJ3GEYJ 821 V (820) | B | 81.5/91.7 |
| R592 | 7030000300 | S.RES MCR10EZHJ 220 (221) | B | 59.4/61.9 |
| R601 | 7030000260 | S.RES MCR10EZHJ 100 (101) | B | 42.7/43.5 |
| R602 | 7030000260 | S.RES MCR10EZHJ 100 (101) | B | 53.5/43.5 |
| R603 | 7030000260 | S.RES MCR10EZHJ 100 (101) | B | 64.3/43.5 |
| R604 | 7030000260 | S.RES MCR10EZHJ 100 (101) | B | 75.2/43.5 |
| R605 | 7030000260 | S.RES MCR10EZHJ 100 (101) | B | 86.0/43.5 |
| R606 | 7030000260 | S.RES MCR10EZHJ 100 (101) | T | 34.3/43.5 |
| R607 | 7030000260 | S.RES MCR10EZHJ 100 (101) | T | 43.3/43.5 |
| R608 | 7030000260 | S.RES MCR10EZHJ 100 (101) | T | 52.3/43.5 |
| R609 | 7030000260 | S.RES MCR10EZHJ 100 (101) | T | 61.3/43.5 |
| R610 | 7030003400 | S.RES ERJ3GEYJ 471 V (470) | T | 79.8/54.0 |
| R611 | 7030000260 | S.RES MCR10EZHJ 100 (101) | T | 70.3/43.5 |
| R612 | 7030009851 | S.RES ERA3YED 271V (270) | T | 44.1/54.1 |
| R613 | 7030003230 | S.RES ERJ3GEYJ 180 V (18) | T | 46.2/53.4 |
| R614 | 7030009851 | S.RES ERA3YED 271V (270) | T | 44.1/52.8 |
| R801 | 7030003380 | S.RES ERJ3GEYJ 331 V (330) | T | 37.2/26.2 |
| R802 | 7030009891 | S.RES ERA3YED 151V (150) | B | 37.2/18.7 |
| R803 | 7030003440 | S.RES ERJ3GEYJ 102 V (1K) | B | 49.7/21.0 |
| R804 | 7030003490 | S.RES ERJ3GEYJ 272 V (2.7K) | B | 47.8/21.7 |
| R805 | 7030003300 | S.RES ERJ3GEYJ 680 V (68) | T | 57.6/18.7 |
| R806 | 7030003320 | S.RES ERJ3GEYJ 101 V (100) | T | 56.2/18.7 |
| R807 | 7030003320 | S.RES ERJ3GEYJ 101 V (100) | T | 56.9/16.5 |
| R808 | 7030003640 | S.RES ERJ3GEYJ 473 V (47K) | B | 89.9/87.6 |
| R809 | 7030003460 | S.RES ERJ3GEYJ 152 V (1.5K) | B | 84.7/87.6 |
| R810 | 7030003680 | S.RES ERJ3GEYJ 104 V (100K) | T | 34.0/22.3 |
| R811 | 7030003560 | S.RES ERJ3GEYJ 103 V (10K) | T | 30.9/19.6 |
| R812 | 7030009851 | S.RES ERA3YED 271V (270) | T | 34.0/27.5 |
| R813 | 7030003230 | S.RES ERJ3GEYJ 180 V (18) | T | 34.0/26.2 |
| R814 | 7030009851 | S.RES ERA3YED 271V (270) | T | 34.0/24.9 |
| R815 | 7030003320 | S.RES ERJ3GEYJ 101 V (100) | T | 31.9/25.5 |
| R816 | 7030003680 | S.RES ERJ3GEYJ 104 V (100K) | T | 31.2/23.6 |
| R817 | 7030003860 | S.RES ERJ3GE JPW V | T | 52.7/23.9 |
| R818 | 7030003320 | S.RES ERJ3GEYJ 101 V (100) | B | 41.7/21.0 |
| R820 | 7030003440 | S.RES ERJ3GEYJ 102 V (1K) | T | 77.7/62.8 |
| R821 | 7030003320 | S.RES ERJ3GEYJ 101 V (100) | T | 88.2/61.0 |
| R822 | 7030003620 | S.RES ERJ3GEYJ 333 V (33K) | T | 88.2/58.0 |
| R823 | 7030003280 | S.RES ERJ3GEYJ 470 V (47) | T | 83.3/51.5 |
| R824 | 7030003320 | S.RES ERJ3GEYJ 101 V (100) | T | 77.1/58.7 |
| R825 | 7030003320 | S.RES ERJ3GEYJ 101 V (100) | T | 82.3/33.8 |
| R826 | 7030003230 | S.RES ERJ3GEYJ 180 V (18) | T | 87.2/36.2 |
| R827 | 7030009851 | S.RES ERA3YED 271V (270) | T | 85.2/37.0 |
| R828 | 7030009851 | S.RES ERA3YED 271V (270) | T | 85.2/35.5 |
| R829 | 7030003400 | S.RES ERJ3GEYJ 471 V (470) | T | 86.6/55.1 |
| R830 | 7030003330 | S.RES ERJ3GEYJ 121 V (120) | T | 86.0/53.3 |
| R831 | 7030003600 | S.RES ERJ3GEYJ 223 V (22K) | T | 83.3/54.6 |
| R832 | 7030003290 | S.RES ERJ3GEYJ 560 V (56) | B | 87.3/71.1 |
| R833 | 7030003480 | S.RES ERJ3GEYJ 222 V (2.2K) | B | 89.4/71.8 |
| R834 | 7030003440 | S.RES ERJ3GEYJ 102 V (1K) | B | 85.3/79.2 |
| R835 | 7030003440 | S.RES ERJ3GEYJ 102 V (1K) | B | 83.1/74.2 |
| R836 | 7030003500 | S.RES ERJ3GEYJ 332 V (3.3K) | B | 83.2/79.1 |
| R837 | 7030003480 | S.RES ERJ3GEYJ 222 V (2.2K) | T | 29.8/81.6 |
| R838 | 7030003510 | S.RES ERJ3GEYJ 392 V (3.9K) | T | 33.6/73.8 |
| R839 | 7030003480 | S.RES ERJ3GEYJ 222 V (2.2K) | T | 38.1/73.4 |
| R840 | 7030003400 | S.RES ERJ3GEYJ 471 V (470) | T | 38.1/72.1 |
| R841 | 7030003300 | S.RES ERJ3GEYJ 680 V (68) | T | 35.3/71.6 |
| R851 | 7030009861 | S.RES ERA3YED 471V (470) | T | 110.0/87.6 |
| R852 | 7030003560 | S.RES ERJ3GEYJ 103 V (10K) | T | 37.9/69.8 |
| R900 | 7030003320 | S.RES ERJ3GEYJ 101 V (100) | T | 126.3/5.8 |
| R901 | 7030003320 | S.RES ERJ3GEYJ 101 V (100) | B | 125.3/5.8 |
| R902 | 7030003320 | S.RES ERJ3GEYJ 101 V (100) | T | 124.3/5.8 |
| R903 | 7030003320 | S.RES ERJ3GEYJ 101 V (100) | B | 123.3/5.8 |
| R904 | 7030003320 | S.RES ERJ3GEYJ 101 V (100) | T | 122.3/5.8 |
| R906 | 7030003320 | S.RES ERJ3GEYJ 101 V (100) | T | 120.3/5.8 |
| R908 | 7030003320 | S.RES ERJ3GEYJ 101 V (100) | T | 118.3/5.8 |
| R909 | 7030003320 | S.RES ERJ3GEYJ 101 V (100) | B | 117.3/5.8 |
| R910 | 7030003320 | S.RES ERJ3GEYJ 101 V (100) | T | 116.3/5.8 |
| R911 | 7030003320 | S.RES ERJ3GEYJ 101 V (100) | B | 115.3/5.8 |
| R912 | 7030003320 | S.RES ERJ3GEYJ 101 V (100) | T | 114.3/5.8 |
| R913 | 7030003320 | S.RES ERJ3GEYJ 101 V (100) | B | 113.3/5.8 |
| R914 | 7030003320 | S.RES ERJ3GEYJ 101 V (100) | T | 112.3/5.8 |
| R915 | 7030003320 | S.RES ERJ3GEYJ 101 V (100) | B | 111.3/5.8 |
| R916 | 7030003320 | S.RES ERJ3GEYJ 101 V (100) | T | 110.3/5.8 |
| R917 | 7030003320 | S.RES ERJ3GEYJ 101 V (100) | B | 109.3/5.8 |
| R918 | 7030003320 | S.RES ERJ3GEYJ 101 V (100) | T | 13.8/119.5 |
| R920 | 7030003320 | S.RES ERJ3GEYJ 101 V (100) | T | 125.8/15.4 |
| R921 | 7030003320 | S.RES ERJ3GEYJ 101 V (100) | B | 124.8/15.5 |
| R922 | 7030003320 | S.RES ERJ3GEYJ 101 V (100) | T | 123.8/15.4 |
| R923 | 7030003320 | S.RES ERJ3GEYJ 101 V (100) | B | 122.8/15.5 |
| R924 | 7030003320 | S.RES ERJ3GEYJ 101 V (100) | T | 121.8/15.4 |
| R925 | 7030003320 | S.RES ERJ3GEYJ 101 V (100) | B | 120.8/15.5 |
| R926 | 7030003320 | S.RES ERJ3GEYJ 101 V (100) | T | 119.8/15.4 |
| R927 | 7030003320 | S.RES ERJ3GEYJ 101 V (100) | B | 118.8/15.5 |
| R928 | 7030003320 | S.RES ERJ3GEYJ 101 V (100) | T | 117.8/15.4 |
| R929 | 7030003320 | S.RES ERJ3GEYJ 101 V (100) | B | 116.8/15.5 |

## [MAIN UNIT]

| REF NO. | PARTS NO. | DESCRIPTION | M. | H/V LOCATION |
|---|---|---|---|---|
| R930 | 7030003320 | S.RES ERJ3GEYJ 101 V (100) | T | 115.8/15.4 |
| R932 | 7030003320 | S.RES ERJ3GEYJ 101 V (100) | T | 113.8/15.4 |
| R933 | 7030003320 | S.RES ERJ3GEYJ 101 V (100) | B | 112.8/15.4 |
| R934 | 7030003320 | S.RES ERJ3GEYJ 101 V (100) | T | 111.8/15.4 |
| R936 | 7030003320 | S.RES ERJ3GEYJ 101 V (100) | T | 109.8/15.4 |
| R937 | 7030003320 | S.RES ERJ3GEYJ 101 V (100) | B | 108.8/15.4 |
| R938 | 7030003320 | S.RES ERJ3GEYJ 101 V (100) | T | 12.5/119.5 |
| R940 | 7030003320 | S.RES ERJ3GEYJ 101 V (100) | T | 94.4/5.8 |
| R941 | 7030003320 | S.RES ERJ3GEYJ 101 V (100) | B | 93.4/5.8 |
| R942 | 7030003320 | S.RES ERJ3GEYJ 101 V (100) | T | 92.4/5.8 |
| R943 | 7030003320 | S.RES ERJ3GEYJ 101 V (100) | B | 91.4/5.8 |
| R944 | 7030003320 | S.RES ERJ3GEYJ 101 V (100) | T | 90.4/5.8 |
| R945 | 7030003320 | S.RES ERJ3GEYJ 101 V (100) | B | 89.4/5.8 |
| R946 | 7030003320 | S.RES ERJ3GEYJ 101 V (100) | T | 88.4/5.8 |
| R947 | 7030003320 | S.RES ERJ3GEYJ 101 V (100) | B | 87.4/5.8 |
| R948 | 7030003320 | S.RES ERJ3GEYJ 101 V (100) | T | 86.4/5.8 |
| R949 | 7030003320 | S.RES ERJ3GEYJ 101 V (100) | B | 85.4/5.8 |
| R950 | 7030003320 | S.RES ERJ3GEYJ 101 V (100) | T | 84.4/5.8 |
| R951 | 7030003320 | S.RES ERJ3GEYJ 101 V (100) | B | 83.4/5.8 |
| R952 | 7030003320 | S.RES ERJ3GEYJ 101 V (100) | T | 82.4/5.8 |
| R953 | 7030003320 | S.RES ERJ3GEYJ 101 V (100) | B | 81.4/5.8 |
| R954 | 7030003320 | S.RES ERJ3GEYJ 101 V (100) | T | 80.4/5.8 |
| R955 | 7030003320 | S.RES ERJ3GEYJ 101 V (100) | B | 79.4/5.8 |
| R957 | 7030003320 | S.RES ERJ3GEYJ 101 V (100) | B | 77.4/5.8 |
| R958 | 7030003320 | S.RES ERJ3GEYJ 101 V (100) | T | 76.4/5.8 |
| R960 | 7030003320 | S.RES ERJ3GEYJ 101 V (100) | T | 93.9/15.4 |
| R961 | 7030003320 | S.RES ERJ3GEYJ 101 V (100) | B | 92.9/15.4 |
| R962 | 7030003320 | S.RES ERJ3GEYJ 101 V (100) | T | 91.9/15.4 |
| R963 | 7030003320 | S.RES ERJ3GEYJ 101 V (100) | B | 90.9/15.4 |
| R964 | 7030003320 | S.RES ERJ3GEYJ 101 V (100) | T | 89.9/15.4 |
| R966 | 7030003320 | S.RES ERJ3GEYJ 101 V (100) | T | 87.9/15.4 |
| R967 | 7030003320 | S.RES ERJ3GEYJ 101 V (100) | B | 86.9/15.4 |
| R968 | 7030003320 | S.RES ERJ3GEYJ 101 V (100) | T | 85.9/15.4 |
| R969 | 7030003320 | S.RES ERJ3GEYJ 101 V (100) | B | 84.9/15.4 |
| R970 | 7030003320 | S.RES ERJ3GEYJ 101 V (100) | T | 83.9/15.4 |
| R971 | 7030003320 | S.RES ERJ3GEYJ 101 V (100) | B | 82.9/15.4 |
| R972 | 7030003320 | S.RES ERJ3GEYJ 101 V (100) | T | 81.9/15.4 |
| R973 | 7030003320 | S.RES ERJ3GEYJ 101 V (100) | B | 80.9/15.4 |
| R974 | 7030003320 | S.RES ERJ3GEYJ 101 V (100) | T | 79.9/15.4 |
| R975 | 7030003320 | S.RES ERJ3GEYJ 101 V (100) | B | 78.9/15.4 |
| R976 | 7030003320 | S.RES ERJ3GEYJ 101 V (100) | T | 77.9/15.4 |
| R977 | 7030003320 | S.RES ERJ3GEYJ 101 V (100) | B | 76.9/15.4 |
| R978 | 7030003320 | S.RES ERJ3GEYJ 101 V (100) | T | 75.9/15.4 |
| R979 | 7030003320 | S.RES ERJ3GEYJ 101 V (100) | B | 74.9/15.4 |
| C1 | 4030006880 | S.CER C1608 JB 1H 472K-T | B | 207.5/109.2 |
| C2 | 4030006880 | S.CER C1608 JB 1H 472K-T | T | 225.7/110.3 |
| C3 | 4030006880 | S.CER C1608 JB 1H 472K-T | B | 220.4/106.6 |
| C4 | 4030006880 | S.CER C1608 JB 1H 472K-T | T | 204.7/110.3 |
| C5 | 4030006880 | S.CER C1608 JB 1H 472K-T | T | 222.2/110.3 |
| C6 | 4030006880 | S.CER C1608 JB 1H 472K-T | T | 211.7/110.3 |
| C7 | 4030006880 | S.CER C1608 JB 1H 472K-T | T | 215.2/110.3 |
| C8 | 4030006880 | S.CER C1608 JB 1H 472K-T | T | 200.4/110.3 |
| C9 | 4030006880 | S.CER C1608 JB 1H 472K-T | T | 193.4/110.3 |
| C10 | 4030006880 | S.CER C1608 JB 1H 472K-T | T | 196.9/110.3 |
| C11 | 4030006880 | S.CER C1608 JB 1H 472K-T | B | 168.0/106.8 |
| C12 | 4030006880 | S.CER C1608 JB 1H 472K-T | T | 183.7/110.3 |
| C13 | 4030006880 | S.CER C1608 JB 1H 472K-T | B | 178.4/106.6 |
| C14 | 4030006880 | S.CER C1608 JB 1H 472K-T | T | 162.7/110.3 |
| C15 | 4030006880 | S.CER C1608 JB 1H 472K-T | T | 180.2/110.3 |
| C16 | 4030006880 | S.CER C1608 JB 1H 472K-T | T | 169.7/110.3 |
| C17 | 4030006880 | S.CER C1608 JB 1H 472K-T | T | 173.2/110.3 |
| C18 | 4030006880 | S.CER C1608 JB 1H 472K-T | T | 158.4/110.3 |
| C19 | 4030006880 | S.CER C1608 JB 1H 472K-T | T | 151.4/110.3 |
| C20 | 4030006880 | S.CER C1608 JB 1H 472K-T | T | 154.9/110.3 |
| C21 | 4030006880 | S.CER C1608 JB 1H 472K-T | B | 163.9/96.8 |
| C22 | 4030006880 | S.CER C1608 JB 1H 472K-T | B | 174.7/98.0 |
| C23 | 4030006880 | S.CER C1608 JB 1H 472K-T | B | 167.1/98.1 |
| C24 | 4030006880 | S.CER C1608 JB 1H 472K-T | B | 145.1/106.9 |
| C25 | 4510008540 | S.ELE EEE1CA100SR | T | 218.3/83.6 |
| C26 | 4510008540 | S.ELE EEE1CA100SR | T | 233.7/83.5 |
| C28 | 4510008540 | S.ELE EEE1CA100SR | T | 191.1/80.5 |
| C29 | 4510008540 | S.ELE EEE1CA100SR | T | 184.9/80.5 |
| C30 | 4510008540 | S.ELE EEE1CA100SR | T | 184.2/92.3 |
| C31 | 4030011600 | S.CER C1608 JB 1E 104K-T | T | 187.7/74.5 |
| C32 | 4510008540 | S.ELE EEE1CA100SR | T | 179.0/82.1 |
| C33 | 4510008540 | S.ELE EEE1CA100SR | T | 178.9/87.0 |
| C34 | 4030012600 | S.CER C2012 JB 1A 105M-T | T | 189.0/92.3 |
| C35 | 4030012600 | S.CER C2012 JB 1A 105M-T | T | 179.4/92.4 |
| C36 | 4510008500 | S.ELE EEE1CA101WP | T | 222.1/104.5 |
| C37 | 4510008540 | S.ELE EEE1CA100SR | T | 229.5/107.3 |
| C38 | 4510008500 | S.ELE EEE1CA101WP | T | 174.3/104.1 |
| C39 | 4510008540 | S.ELE EEE1CA100SR | T | 181.9/104.7 |
| C40 | 4510008540 | S.ELE EEE1CA100SR | T | 190.0/63.4 |
| C41 | 4510008540 | S.ELE EEE1CA100SR | T | 184.0/63.4 |
| C42 | 4030011600 | S.CER C1608 JB 1E 104K-T | T | 187.7/77.1 |
| C43 | 4030011600 | S.CER C1608 JB 1E 104K-T | T | 194.5/74.5 |
| C44 | 4030011600 | S.CER C1608 JB 1E 104K-T | T | 180.9/77.1 |
| C45 | 4030012600 | S.CER C2012 JB 1A 105M-T | T | 194.2/83.8 |
| C46 | 4030012600 | S.CER C2012 JB 1A 105M-T | T | 193.5/90.9 |
| C50 | 4030006880 | S.CER C1608 JB 1H 472K-T | B | 139.6/118.5 |
| C51 | 4010005380 | CER HM13SJ YB 472K 500V | | |
| C52 | 4030006880 | S.CER C1608 JB 1H 472K-T | B | 114.5/98.6 |
| C53 | 4030006880 | S.CER C1608 JB 1H 472K-T | B | 116.2/96.3 |
| C54 | 4030006880 | S.CER C1608 JB 1H 472K-T | B | 79.9/123.6 |
| C55 | 4030006880 | S.CER C1608 JB 1H 472K-T | B | 79.9/118.7 |
| C56 | 4030006880 | S.CER C1608 JB 1H 472K-T | B | 92.8/106.5 |
| C57 | 4030018620 | S.CER C1608 CH 1H 222J-T | T | 179.5/70.9 |
| C58 | 4030018620 | S.CER C1608 CH 1H 222J-T | T | 194.6/70.7 |
| C61 | 4030012600 | S.CER C2012 JB 1A 105M-T | T | 119.1/77.8 |
| C62 | 4030012600 | S.CER C2012 JB 1A 105M-T | T | 119.1/76.1 |
| C65 | 4030012600 | S.CER C2012 JB 1A 105M-T | B | 108.1/76.2 |
| C68 | 4030006860 | S.CER C1608 JB 1H 102K-T | B | 126.4/101.9 |
| C69 | 4030011600 | S.CER C1608 JB 1E 104K-T | T | 121.5/90.9 |

Eqv.= This component is equivalent to the REF No. component listed above, and may be substituted on parts orders and repairs.

M.=Mounted side (T: Mounted on the Top side, B: Mounted on the Bottom side)
S.=Surface mount

## [MAIN UNIT]

| REF NO. | PARTS NO. | DESCRIPTION | M. | H/V LOCATION |
|---|---|---|---|---|
| C70 | 4030011600 | S.CER C1608 JB 1E 104K-T | B | 122.1/89.4 |
| C71 | 4030011600 | S.CER C1608 JB 1E 104K-T | B | 136.8/96.8 |
| C80 | 4030007130 | S.CER C1608 CH 1H 101J-T | B | 59.2/122.3 |
| C100 | 4030011600 | S.CER C1608 JB 1E 104K-T | B | 208.4/91.0 |
| C101 | 4030011600 | S.CER C1608 JB 1E 104K-T | T | 213.4/87.4 |
| C103 | 4510008550 | S.ELE EEE1HA010SR | T | 210.7/83.6 |
| C105 | 4030011600 | S.CER C1608 JB 1E 104K-T | B | 201.6/91.0 |
| C106 | 4030011600 | S.CER C1608 JB 1E 104K-T | T | 206.6/87.4 |
| C108 | 4510008550 | S.ELE EEE1HA010SR | T | 202.9/83.6 |
| C110 | 4510008540 | S.ELE EEE1CA100SR | T | 209.8/63.3 |
| C113 | 4510008540 | S.ELE EEE1CA100SR | T | 209.8/73.8 |
| C115 | 4510008540 | S.ELE EEE1CA100SR | T | 209.8/48.7 |
| C116 | 4510008540 | S.ELE EEE1CA100SR | T | 209.8/38.1 |
| C117 | 4510009120 | S.ELE EEE1VA2R2NR | T | 215.7/73.8 |
| C118 | 4510009120 | S.ELE EEE1VA2R2NR | T | 203.9/73.8 |
| C120 | 4510008540 | S.ELE EEE1CA100SR | T | 223.6/50.7 |
| C121 | 4510008540 | S.ELE EEE1CA100SR | T | 214.3/58.0 |
| C122 | 4510008540 | S.ELE EEE1CA100SR | T | 204.7/58.0 |
| C123 | 4510008550 | S.ELE EEE1HA010SR | T | 227.0/56.1 |
| C124 | 4510008550 | S.ELE EEE1HA010SR | T | 227.1/60.9 |
| C125 | 4510008540 | S.ELE EEE1CA100SR | T | 218.8/67.0 |
| C126 | 4510008540 | S.ELE EEE1CA100SR | T | 223.6/67.0 |
| C127 | 4510008550 | S.ELE EEE1HA010SR | T | 234.1/60.9 |
| C128 | 4510008550 | S.ELE EEE1HA010SR | T | 233.3/56.1 |
| C129 | 4030008650 | S.CER C1608 JB 1H 332K-T | T | 215.6/67.3 |
| C130 | 4030008650 | S.CER C1608 JB 1H 332K-T | T | 203.8/67.3 |
| C131 | 4030012600 | S.CER C2012 JB 1A 105M-T | T | 220.3/52.0 |
| C132 | 4030012600 | S.CER C2012 JB 1A 105M-T | T | 218.5/52.0 |
| C133 | 4030008880 | S.CER C1608 JB 1H 223K-T | T | 232.2/66.6 |
| C134 | 4030008950 | S.CER C2012 JB 1C 823K-T | T | 231.3/69.0 |
| C135 | 4030008880 | S.CER C1608 JB 1H 223K-T | T | 234.1/52.3 |
| C136 | 4030008950 | S.CER C2012 JB 1C 823K-T | T | 232.4/50.1 |
| C140 | 4510008540 | S.ELE EEE1CA100SR | T | 249.6/35.6 |
| C141 | 4510008190 | ELE EEUFC1E222S | | |
| C142 | 4510009080 | S.ELE EEE1HAR22SR | T | 253.9/59.1 |
| C143 | 4510008500 | S.ELE EEE1CA101WP | T | 253.3/67.9 |
| C144 | 4510008180 | ELE EEUFC1E102S | | |
| C145 | 4510008180 | ELE EEUFC1E102S | | |
| C146 | 4030011600 | S.CER C1608 JB 1E 104K-T | B | 252.2/101.3 |
| C147 | 4030011600 | S.CER C1608 JB 1E 104K-T | B | 242.4/107.8 |
| C148 | 4030006880 | S.CER C1608 JB 1H 472K-T | B | 247.8/97.2 |
| C149 | 4030006880 | S.CER C1608 JB 1H 472K-T | B | 252.2/95.4 |
| C150 | 4030006880 | S.CER C1608 JB 1H 472K-T | B | 239.9/97.2 |
| C151 | 4030011600 | S.CER C1608 JB 1E 104K-T | T | 228.6/73.1 |
| C152 | 4030011600 | S.CER C1608 JB 1E 104K-T | T | 233.4/45.5 |
| C180 | 4510009010 | S.ELE EEE1AA221P | T | 188.6/50.5 |
| C181 | 4510008540 | S.ELE EEE1CA100SR | T | 209.5/58.0 |
| C182 | 4510008540 | S.ELE EEE1CA100SR | T | 199.9/58.0 |
| C183 | 4510008540 | S.ELE EEE1CA100SR | T | 194.4/57.3 |
| C184 | 4510008540 | S.ELE EEE1CA100SR | T | 195.8/52.5 |
| C185 | 4510008540 | S.ELE EEE1CA100SR | T | 195.8/47.7 |
| C186 | 4510008540 | S.ELE EEE1CA100SR | T | 180.3/50.5 |
| C187 | 4030011600 | S.CER C1608 JB 1E 104K-T | T | 183.4/39.6 |
| C188 | 4510008540 | S.ELE EEE1CA100SR | T | 194.4/42.8 |
| C189 | 4510008540 | S.ELE EEE1CA100SR | T | 180.3/45.6 |
| C190 | 4030011340 | S.CER C1608 CH 1H 471J-T | T | 194.6/33.4 |
| C191 | 4030012610 | S.CER C2012 JB 1C 474K-T | T | 191.1/37.7 |
| C192 | 4030011340 | S.CER C1608 CH 1H 471J-T | T | 180.4/35.5 |
| C193 | 4510008540 | S.ELE EEE1CA100SR | T | 186.8/31.6 |
| C194 | 4030012600 | S.CER C2012 JB 1A 105M-T | T | 180.9/59.4 |
| C195 | 4030012600 | S.CER C2012 JB 1A 105M-T | T | 180.8/54.7 |
| C196 | 4510008500 | S.ELE EEE1CA101WP | T | 176.2/36.5 |
| C197 | 4510008500 | S.ELE EEE1CA101WP | T | 199.8/31.9 |
| C198 | 4030011600 | S.CER C1608 JB 1E 104K-T | T | 125.6/95.8 |
| C200 | 4510008540 | S.ELE EEE1CA100SR | T | 153.3/80.5 |
| C201 | 4510008540 | S.ELE EEE1CA100SR | T | 160.5/80.0 |
| C203 | 4510008550 | S.ELE EEE1HA010SR | T | 170.6/70.7 |
| C204 | 4510008550 | S.ELE EEE1HA010SR | T | 142.1/70.9 |
| C205 | 4030011600 | S.CER C1608 JB 1E 104K-T | B | 148.3/71.8 |
| C206 | 4030009970 | S.CER C1608 JB 1H 182K-T | T | 192.0/33.4 |
| C207 | 4030009970 | S.CER C1608 JB 1H 182K-T | T | 181.2/33.6 |
| C208 | 4030011600 | S.CER C1608 JB 1E 104K-T | T | 219.0/42.5 |
| C209 | 4030011600 | S.CER C1608 JB 1E 104K-T | B | 244.1/25.5 |
| C210 | 4510008550 | S.ELE EEE1HA010SR | T | 168.1/100.5 |
| C211 | 4510008540 | S.ELE EEE1CA100SR | T | 160.5/84.8 |
| C212 | 4510008530 | S.ELE EEE1HA2R2SR | T | 169.7/94.9 |
| C213 | 4030017840 | S.CER C2012 CH 1H 222J-T | T | 166.7/91.5 |
| C214 | 4510008540 | S.ELE EEE1CA100SR | T | 170.6/85.3 |
| C215 | 4510008550 | S.ELE EEE1HA010SR | T | 150.5/85.3 |
| C216 | 4510008550 | S.ELE EEE1HA010SR | T | 142.6/85.3 |
| C217 | 4030007120 | S.CER C1608 CH 1H 820J-T | T | 164.9/73.5 |
| C220 | 4510008550 | S.ELE EEE1HA010SR | T | 163.3/100.5 |
| C221 | 4510008540 | S.ELE EEE1CA100SR | T | 170.6/90.1 |
| C222 | 4510008530 | S.ELE EEE1HA2R2SR | T | 151.3/94.9 |
| C223 | 4030017840 | S.CER C2012 CH 1H 222J-T | T | 154.3/91.5 |
| C225 | 4510008550 | S.ELE EEE1HA010SR | T | 150.5/90.1 |
| C226 | 4510008550 | S.ELE EEE1HA010SR | T | 142.6/90.2 |
| C230 | 4510008500 | S.ELE EEE1CA101WP | T | 68.9/10.5 |
| C231 | 4510008500 | S.ELE EEE1CA101WP | T | 84.2/22.0 |
| C233 | 4510008550 | S.ELE EEE1HA010SR | T | 69.8/16.5 |
| C234 | 4030007170 | S.CER C1608 CH 1H 221J-T | T | 73.0/20.4 |
| C235 | 4030011600 | S.CER C1608 JB 1E 104K-T | T | 79.1/22.0 |
| C241 | 4510008540 | S.ELE EEE1CA100SR | T | 232.1/28.1 |
| C242 | 4510004591 | ELE 16 ME 470 HC | | |
| C243 | 4510008500 | S.ELE EEE1CA101WP | T | 176.7/63.0 |
| C244 | 4030011600 | S.CER C1608 JB 1E 104K-T | T | 176.0/56.8 |
| C249 | 4030011600 | S.CER C1608 JB 1E 104K-T | T | 160.3/68.3 |
| C250 | 4030011600 | S.CER C1608 JB 1E 104K-T | T | 133.1/39.1 |
| C251 | 4030011600 | S.CER C1608 JB 1E 104K-T | T | 143.4/32.8 |
| C260 | 4030011600 | S.CER C1608 JB 1E 104K-T | T | 133.1/53.5 |
| C261 | 4030011600 | S.CER C1608 JB 1E 104K-T | T | 143.3/47.1 |
| C290 | 4030011600 | S.CER C1608 JB 1E 104K-T | T | 149.1/28.2 |
| C291 | 4030011600 | S.CER C1608 JB 1E 104K-T | T | 142.9/38.1 |
| C310 | 4030011600 | S.CER C1608 JB 1E 104K-T | T | 153.7/43.3 |
| C311 | 4030011600 | S.CER C1608 JB 1E 104K-T | T | 142.9/52.6 |

## [MAIN UNIT]

| REF NO. | PARTS NO. | DESCRIPTION | M. | H/V LOCATION |
|---|---|---|---|---|
| C330 | 4030011600 | S.CER C1608 JB 1E 104K-T | T | 154.6/58.5 |
| C331 | 4030011600 | S.CER C1608 JB 1E 104K-T | T | 154.6/63.5 |
| C332 | 4030011600 | S.CER C1608 JB 1E 104K-T | T | 162.4/55.9 |
| C333 | 4030011600 | S.CER C1608 JB 1E 104K-T | T | 164.7/66.8 |
| C340 | 4030017810 | S.CER C1608 CH 1H 102J-T | B | 206.0/97.0 |
| C341 | 4030017810 | S.CER C1608 CH 1H 102J-T | B | 191.2/97.0 |
| C342 | 4030011600 | S.CER C1608 JB 1E 104K-T | B | 199.9/26.2 |
| C343 | 4030007130 | S.CER C1608 CH 1H 101J-T | B | 211.9/97.0 |
| C344 | 4510008590 | S.ELE EEE1AA101SP | T | 209.7/30.7 |
| C351 | 4510008540 | S.ELE EEE1CA100SR | T | 132.4/89.7 |
| C352 | 4030011600 | S.CER C1608 JB 1E 104K-T | T | 127.2/84.1 |
| C360 | 4030017810 | S.CER C1608 CH 1H 102J-T | B | 153.8/96.9 |
| C361 | 4030017810 | S.CER C1608 CH 1H 102J-T | B | 141.8/92.7 |
| C362 | 4030011600 | S.CER C1608 JB 1E 104K-T | B | 144.8/27.5 |
| C363 | 4030007130 | S.CER C1608 CH 1H 101J-T | B | 157.1/96.9 |
| C364 | 4510008590 | S.ELE EEE1AA101SP | T | 152.9/14.8 |
| C380 | 4030017810 | S.CER C1608 CH 1H 102J-T | B | 27.6/37.6 |
| C381 | 4030017810 | S.CER C1608 CH 1H 102J-T | B | 27.7/52.4 |
| C383 | 4030007130 | S.CER C1608 CH 1H 101J-T | B | 16.5/52.3 |
| C384 | 4510008590 | S.ELE EEE1AA101SP | T | 93.0/45.8 |
| C400 | 4030006880 | S.CER C1608 JB 1H 472K-T | T | 240.5/11.7 |
| C401 | 4030006880 | S.CER C1608 JB 1H 472K-T | B | 234.8/15.5 |
| C402 | 4030006880 | S.CER C1608 JB 1H 472K-T | B | 238.1/15.5 |
| C403 | 4030006880 | S.CER C1608 JB 1H 472K-T | T | 230.5/16.0 |
| C404 | 4030006880 | S.CER C1608 JB 1H 472K-T | T | 232.0/13.1 |
| C405 | 4030006880 | S.CER C1608 JB 1H 472K-T | T | 43.2/12.9 |
| C406 | 4030006880 | S.CER C1608 JB 1H 472K-T | T | 31.1/15.3 |
| C407 | 4030006880 | S.CER C1608 JB 1H 472K-T | T | 43.2/11.6 |
| C408 | 4030006880 | S.CER C1608 JB 1H 472K-T | T | 32.0/12.6 |
| C409 | 4030006880 | S.CER C1608 JB 1H 472K-T | T | 30.7/12.6 |
| C410 | 4030006880 | S.CER C1608 JB 1H 472K-T | T | 14.8/41.0 |
| C411 | 4030006880 | S.CER C1608 JB 1H 472K-T | B | 14.8/39.6 |
| C412 | 4030006880 | S.CER C1608 JB 1H 472K-T | T | 14.8/38.0 |
| C413 | 4030006880 | S.CER C1608 JB 1H 472K-T | B | 14.8/36.4 |
| C414 | 4030006880 | S.CER C1608 JB 1H 472K-T | B | 12.8/33.0 |
| C415 | 4030006880 | S.CER C1608 JB 1H 472K-T | T | 12.8/32.0 |
| C416 | 4030006880 | S.CER C1608 JB 1H 472K-T | B | 12.8/31.0 |
| C418 | 4030006880 | S.CER C1608 JB 1H 472K-T | B | 12.0/28.2 |
| C430 | 4030006880 | S.CER C1608 JB 1H 472K-T | B | 9.0/69.0 |
| C431 | 4030006880 | S.CER C1608 JB 1H 472K-T | B | 9.0/71.0 |
| C432 | 4030006880 | S.CER C1608 JB 1H 472K-T | B | 9.0/73.0 |
| C435 | 4030006880 | S.CER C1608 JB 1H 472K-T | B | 9.1/74.6 |
| C440 | 4030006880 | S.CER C1608 JB 1H 472K-T | T | 166.3/13.5 |
| C441 | 4030006880 | S.CER C1608 JB 1H 472K-T | T | 159.0/13.1 |
| C442 | 4030006880 | S.CER C1608 JB 1H 472K-T | T | 162.6/15.7 |
| C450 | 4030006880 | S.CER C1608 JB 1H 472K-T | B | 250.3/14.2 |
| C451 | 4030006880 | S.CER C1608 JB 1H 472K-T | T | 241.8/10.8 |
| C452 | 4030006880 | S.CER C1608 JB 1H 472K-T | B | 244.1/23.7 |
| C453 | 4030006880 | S.CER C1608 JB 1H 472K-T | B | 244.1/27.3 |
| C454 | 4030006880 | S.CER C1608 JB 1H 472K-T | B | 244.2/29.0 |
| C455 | 4030006880 | S.CER C1608 JB 1H 472K-T | B | 244.1/32.3 |
| C456 | 4030006880 | S.CER C1608 JB 1H 472K-T | B | 250.4/39.6 |
| C460 | 4510008550 | S.ELE EEE1HA010SR | T | 142.1/80.5 |
| C461 | 4510008550 | S.ELE EEE1HA010SR | T | 170.6/75.7 |
| C464 | 4510008540 | S.ELE EEE1CA100SR | T | 153.3/75.7 |
| C465 | 4030011600 | S.CER C1608 JB 1E 104K-T | B | 144.2/75.4 |
| C466 | 4030011600 | S.CER C1608 JB 1E 104K-T | B | 148.3/75.4 |
| C467 | 4030012600 | S.CER C2012 JB 1A 105M-T | T | 139.3/76.4 |
| C469 | 4510008550 | S.ELE EEE1HA010SR | T | 170.6/80.5 |
| C470 | 4510008550 | S.ELE EEE1HA010SR | T | 153.3/70.9 |
| C480 | 4550007320 | S.TAN F930J226MAABMA | B | 216.6/32.3 |
| C481 | 4550007320 | S.TAN F930J226MAABMA | B | 208.7/31.3 |
| C483 | 4550007320 | S.TAN F930J226MAABMA | B | 156.0/16.2 |
| C484 | 4550007320 | S.TAN F930J226MAABMA | B | 163.9/15.2 |
| C486 | 4550007320 | S.TAN F930J226MAABMA | B | 93.6/55.4 |
| C487 | 4550007320 | S.TAN F930J226MAABMA | B | 93.5/47.5 |
| C489 | 4030011600 | S.CER C1608 JB 1E 104K-T | B | 220.9/31.1 |
| C490 | 4030011600 | S.CER C1608 JB 1E 104K-T | B | 150.2/13.6 |
| C491 | 4030011600 | S.CER C1608 JB 1E 104K-T | B | 89.8/57.0 |
| C492 | 4030006880 | S.CER C1608 JB 1H 472K-T | T | 207.6/13.0 |
| C493 | 4510008540 | S.ELE EEE1CA100SR | T | 205.4/3.8 |
| C494 | 4510004591 | ELE 16 ME 470 HC | | |
| C495 | 4030011600 | S.CER C1608 JB 1E 104K-T | B | 26.3/123.0 |
| C496 | 4030011600 | S.CER C1608 JB 1E 104K-T | B | 7.8/114.8 |
| C497 | 4030011600 | S.CER C1608 JB 1E 104K-T | T | 12.7/122.5 |
| C498 | 4510004591 | ELE 16 ME 470 HC | | |
| C499 | 4030011600 | S.CER C1608 JB 1E 104K-T | B | 229.5/26.6 |
| C501 | 4030011600 | S.CER C1608 JB 1E 104K-T | T | 19.2/58.3 |
| C502 | 4030010020 | S.CER C1608 JB 1H 122K-T | T | 23.7/58.3 |
| C503 | 4030009980 | S.CER C1608 JB 1H 152K-T | T | 22.2/60.9 |
| C505 | 4030011330 | S.CER C1608 CH 1H 391J-T | T | 25.2/58.3 |
| C506 | 4030011600 | S.CER C1608 JB 1E 104K-T | T | 26.0/64.4 |
| C507 | 4510008540 | S.ELE EEE1CA100SR | T | 29.1/66.3 |
| C508 | 4510008540 | S.ELE EEE1CA100SR | T | 16.1/66.3 |
| C509 | 4030011600 | S.CER C1608 JB 1E 104K-T | T | 19.2/66.5 |
| C510 | 4030008470 | S.CER C1608 JB 1H 272K-T | T | 20.7/72.4 |
| C511 | 4030011280 | S.CER C1608 CH 1H 271J-T | T | 25.2/72.4 |
| C512 | 4030011600 | S.CER C1608 JB 1E 104K-T | T | 26.0/76.8 |
| C513 | 4510008540 | S.ELE EEE1CA100SR | T | 29.1/77.7 |
| C514 | 4030011600 | S.CER C1608 JB 1E 104K-T | T | 19.2/78.4 |
| C515 | 4510008540 | S.ELE EEE1CA100SR | T | 16.1/78.2 |
| C516 | 4030006860 | S.CER C1608 JB 1H 102K-T | T | 22.7/87.5 |
| C517 | 4030011600 | S.CER C1608 JB 1E 104K-T | T | 20.3/91.9 |
| C518 | 4030011600 | S.CER C1608 JB 1E 104K-T | T | 25.3/87.5 |
| C519 | 4030011600 | S.CER C1608 JB 1E 104K-T | T | 26.6/87.5 |
| C520 | 4510008540 | S.ELE EEE1CA100SR | T | 30.4/86.7 |
| C521 | 4030011600 | S.CER C1608 JB 1E 104K-T | T | 24.0/87.5 |
| C522 | 4030011600 | S.CER C1608 JB 1E 104K-T | B | 18.6/91.9 |
| C523 | 4030011600 | S.CER C1608 JB 1E 104K-T | B | 21.6/91.9 |
| C524 | 4510008540 | S.ELE EEE1CA100SR | T | 29.7/97.0 |
| C525 | 4030006880 | S.CER C1608 JB 1H 472K-T | T | 26.1/91.9 |
| C526 | 4030011600 | S.CER C1608 JB 1E 104K-T | B | 26.1/87.7 |
| C527 | 4030006880 | S.CER C1608 JB 1H 472K-T | B | 29.5/91.9 |
| C528 | 4030011600 | S.CER C1608 JB 1E 104K-T | B | 29.5/94.9 |
| C529 | 4030011600 | S.CER C1608 JB 1E 104K-T | B | 33.5/87.1 |

Eqv.= This component is equivalent to the REF No. component listed above, and may be substituted on parts orders and repairs.

M.=Mounted side (T: Mounted on the Top side, B: Mounted on the Bottom side)
S.=Surface mount

## [MAIN UNIT]

| REF NO. | PARTS NO. | DESCRIPTION | M. | H/V LOCATION |
|---|---|---|---|---|
| C530 | 4030011600 | S.CER C1608 JB 1E 104K-T | B | 33.5/98.8 |
| C531 | 4030006880 | S.CER C1608 JB 1H 472K-T | B | 37.2/94.6 |
| C532 | 4030006880 | S.CER C1608 JB 1H 472K-T | B | 37.2/91.3 |
| C533 | 4030006880 | S.CER C1608 JB 1H 472K-T | B | 46.3/95.1 |
| C534 | 4030006880 | S.CER C1608 JB 1H 472K-T | B | 46.3/82.0 |
| C535 | 4030006880 | S.CER C1608 JB 1H 472K-T | B | 47.3/88.5 |
| C536 | 4030011600 | S.CER C1608 JB 1E 104K-T | B | 42.7/91.4 |
| C537 | 4030006880 | S.CER C1608 JB 1H 472K-T | B | 51.7/82.0 |
| C538 | 4030008920 | S.CER C1608 JB 1H 473K-T | B | 50.5/85.7 |
| C539 | 4030011600 | S.CER C1608 JB 1E 104K-T | T | 52.2/84.4 |
| C540 | 4510008540 | S.ELE EEE1CA100SR | T | 49.1/84.5 |
| C541 | 4030011600 | S.CER C1608 JB 1E 104K-T | B | 49.9/95.1 |
| C544 | 4030009530 | S.CER C1608 CH 1H 030B-T | T | 88.8/94.2 |
| C545 | 4030011600 | S.CER C1608 JB 1E 104K-T | T | 131.9/108.0 |
| C546 | 4030011340 | S.CER C1608 CH 1H 471J-T | B | 69.8/90.7 |
| C548 | 4030011600 | S.CER C1608 JB 1E 104K-T | T | 128.7/102.3 |
| C550 | 4510008540 | S.ELE EEE1CA100SR | T | 127.4/108.0 |
| C551 | 4030006880 | S.CER C1608 JB 1H 472K-T | B | 101.6/91.6 |
| C552 | 4030006860 | S.CER C1608 JB 1H 102K-T | B | 106.4/82.7 |
| C553 | 4030011770 | S.CER C1608 CH 1H 060B-T | B | 104.8/82.7 |
| C554 | 4030011600 | S.CER C1608 JB 1E 104K-T | B | 103.0/79.3 |
| C555 | 4030007030 | S.CER C1608 CH 1H 150J-T | B | 97.9/80.1 |
| C556 | 4030006880 | S.CER C1608 JB 1H 472K-T | B | 102.9/76.5 |
| C558 | 4030007040 | S.CER C1608 CH 1H 180J-T | T | 81.9/69.4 |
| C559 | 4030006880 | S.CER C1608 JB 1H 472K-T | T | 108.4/67.1 |
| C560 | 4030007080 | S.CER C1608 CH 1H 390J-T | T | 108.4/64.2 |
| C561 | 4030006880 | S.CER C1608 JB 1H 472K-T | T | 105.0/71.3 |
| C562 | 4030006860 | S.CER C1608 JB 1H 102K-T | B | 105.6/64.2 |
| C563 | 4030011600 | S.CER C1608 JB 1E 104K-T | T | 98.8/71.3 |
| C564 | 4030007080 | S.CER C1608 CH 1H 390J-T | B | 75.9/67.2 |
| C565 | 4030007130 | S.CER C1608 CH 1H 101J-T | B | 72.5/68.9 |
| C566 | 4030007120 | S.CER C1608 CH 1H 820J-T | B | 69.5/68.5 |
| C567 | 4030007090 | S.CER C1608 CH 1H 470J-T | B | 69.5/70.3 |
| C568 | 4030007130 | S.CER C1608 CH 1H 101J-T | B | 67.1/69.1 |
| C569 | 4030011600 | S.CER C1608 JB 1E 104K-T | B | 62.8/68.1 |
| C570 | 4030006900 | S.CER C1608 JB 1H 103K-T | B | 62.9/59.2 |
| C571 | 4030011600 | S.CER C1608 JB 1E 104K-T | B | 58.8/66.0 |
| C572 | 4030006900 | S.CER C1608 JB 1H 103K-T | B | 60.0/58.5 |
| C573 | 4030011600 | S.CER C1608 JB 1E 104K-T | B | 66.7/59.2 |
| C574 | 4030011600 | S.CER C1608 JB 1E 104K-T | B | 53.3/57.0 |
| C576 | 4610001590 | S.TRI TZC3R100A110R00 (TZC03R100A110) | T | 95.5/95.9 |
| C577 | 4030011600 | S.CER C1608 JB 1E 104K-T | B | 54.6/63.0 |
| C578 | 4030007100 | S.CER C1608 CH 1H 560J-T | B | 91.4/74.5 |
| C579 | 4030006980 | S.CER C1608 CH 1H 070D-T | B | 89.2/76.8 |
| C580 | 4030007100 | S.CER C1608 CH 1H 560J-T | B | 93.2/76.5 |
| C581 | 4030007050 | S.CER C1608 CH 1H 220J-T | B | 22.6/69.5 |
| C582 | 4030007050 | S.CER C1608 CH 1H 220J-T | T | 20.7/84.6 |
| C583 | 4030011600 | S.CER C1608 JB 1E 104K-T | T | 27.2/81.6 |
| C584 | 4030009650 | S.CER C1608 CH 1H 240J-T | B | 104.5/67.3 |
| C585 | 4030006980 | S.CER C1608 CH 1H 070D-T | B | 102.9/67.3 |
| C586 | 4030007070 | S.CER C1608 CH 1H 330J-T | B | 98.5/70.2 |
| C587 | 4030007010 | S.CER C1608 CH 1H 100D-T | B | 97.0/64.9 |
| C588 | 4030007060 | S.CER C1608 CH 1H 270J-T | B | 96.5/70.2 |
| C589 | 4030007020 | S.CER C1608 CH 1H 120J-T | B | 63.8/72.8 |
| C590 | 4030007100 | S.CER C1608 CH 1H 560J-T | B | 62.1/74.5 |
| C601 | 4030006860 | S.CER C1608 JB 1H 102K-T | B | 40.9/52.4 |
| C602 | 4030006860 | S.CER C1608 JB 1H 102K-T | B | 42.7/52.4 |
| C603 | 4030011600 | S.CER C1608 JB 1E 104K-T | B | 40.9/49.1 |
| C604 | 4030007140 | S.CER C1608 CH 1H 121J-T | B | 38.1/49.8 |
| C605 | 4030010760 | S.CER C1608 CH 1H 331J-T | B | 38.1/48.0 |
| C606 | 4030007160 | S.CER C1608 CH 1H 181J-T | B | 33.8/45.5 |
| C607 | 4030007060 | S.CER C1608 CH 1H 270J-T | B | 35.6/45.5 |
| C608 | 4030010760 | S.CER C1608 CH 1H 331J-T | B | 38.1/46.2 |
| C609 | 4030007090 | S.CER C1608 CH 1H 470J-T | B | 38.1/40.8 |
| C610 | 4030007160 | S.CER C1608 CH 1H 181J-T | B | 35.6/41.5 |
| C611 | 4030007060 | S.CER C1608 CH 1H 270J-T | B | 33.8/41.5 |
| C612 | 4030007140 | S.CER C1608 CH 1H 121J-T | B | 38.1/37.1 |
| C613 | 4030010760 | S.CER C1608 CH 1H 331J-T | B | 38.1/39.0 |
| C614 | 4030006860 | S.CER C1608 JB 1H 102K-T | B | 40.9/34.5 |
| C615 | 4030011600 | S.CER C1608 JB 1E 104K-T | B | 40.9/37.8 |
| C616 | 4030006860 | S.CER C1608 JB 1H 102K-T | B | 42.7/34.5 |
| C617 | 4030010040 | S.CER C1608 JB 1H 561K-T | B | 51.7/52.4 |
| C618 | 4030010760 | S.CER C1608 CH 1H 331J-T | B | 53.5/52.4 |
| C619 | 4030011600 | S.CER C1608 JB 1E 104K-T | B | 51.7/49.1 |
| C620 | 4030010760 | S.CER C1608 CH 1H 331J-T | B | 48.9/49.8 |
| C621 | 4030007080 | S.CER C1608 CH 1H 390J-T | B | 48.9/48.0 |
| C622 | 4030007080 | S.CER C1608 CH 1H 390J-T | B | 44.5/45.5 |
| C623 | 4030010760 | S.CER C1608 CH 1H 331J-T | B | 46.4/45.5 |
| C624 | 4030007090 | S.CER C1608 CH 1H 470J-T | B | 48.9/46.2 |
| C625 | 4030010760 | S.CER C1608 CH 1H 331J-T | B | 48.9/40.8 |
| C626 | 4030007080 | S.CER C1608 CH 1H 390J-T | B | 46.4/41.5 |
| C627 | 4030010760 | S.CER C1608 CH 1H 331J-T | B | 44.6/41.5 |
| C628 | 4030007080 | S.CER C1608 CH 1H 390J-T | B | 48.9/37.1 |
| C629 | 4030010760 | S.CER C1608 CH 1H 331J-T | B | 48.9/39.0 |
| C630 | 4030010760 | S.CER C1608 CH 1H 331J-T | B | 51.7/34.5 |
| C631 | 4030011600 | S.CER C1608 JB 1E 104K-T | B | 51.7/37.8 |
| C632 | 4030010040 | S.CER C1608 JB 1H 561K-T | B | 53.5/34.5 |
| C633 | 4030010040 | S.CER C1608 JB 1H 561K-T | B | 62.5/52.4 |
| C634 | 4030011330 | S.CER C1608 CH 1H 391J-T | B | 64.3/52.4 |
| C635 | 4030011600 | S.CER C1608 JB 1E 104K-T | B | 62.5/49.1 |
| C636 | 4030007160 | S.CER C1608 CH 1H 181J-T | B | 59.7/49.8 |
| C637 | 4030007070 | S.CER C1608 CH 1H 330J-T | B | 59.7/48.0 |
| C638 | 4030007030 | S.CER C1608 CH 1H 150J-T | B | 55.4/45.5 |
| C639 | 4030007120 | S.CER C1608 CH 1H 820J-T | B | 57.2/45.5 |
| C640 | 4030007100 | S.CER C1608 CH 1H 560J-T | B | 59.7/46.2 |
| C641 | 4030007140 | S.CER C1608 CH 1H 121J-T | B | 59.7/40.8 |
| C642 | 4030007030 | S.CER C1608 CH 1H 150J-T | B | 57.2/41.5 |
| C643 | 4030007120 | S.CER C1608 CH 1H 820J-T | B | 55.4/41.5 |
| C644 | 4030007070 | S.CER C1608 CH 1H 330J-T | B | 59.7/37.1 |
| C645 | 4030007160 | S.CER C1608 CH 1H 181J-T | B | 59.7/39.0 |
| C646 | 4030011330 | S.CER C1608 CH 1H 391J-T | B | 62.5/34.5 |
| C647 | 4030011600 | S.CER C1608 JB 1E 104K-T | B | 62.5/37.8 |
| C648 | 4030017800 | S.CER C1608 CH 1H 561J-T | B | 64.3/34.5 |
| C649 | 4030010760 | S.CER C1608 CH 1H 331J-T | B | 73.4/52.4 |

## [MAIN UNIT]

| REF NO. | PARTS NO. | DESCRIPTION | M. | H/V LOCATION |
|---|---|---|---|---|
| C650 | 4030007150 | S.CER C1608 CH 1H 151J-T | B | 75.2/52.4 |
| C651 | 4030011600 | S.CER C1608 JB 1E 104K-T | B | 73.4/49.1 |
| C652 | 4030007150 | S.CER C1608 CH 1H 151J-T | B | 70.5/49.8 |
| C653 | 4030007060 | S.CER C1608 CH 1H 270J-T | B | 70.5/48.0 |
| C654 | 4030007060 | S.CER C1608 CH 1H 270J-T | B | 66.2/45.5 |
| C655 | 4030007140 | S.CER C1608 CH 1H 121J-T | B | 68.0/45.5 |
| C656 | 4030007010 | S.CER C1608 CH 1H 100D-T | B | 70.5/46.2 |
| C657 | 4030007150 | S.CER C1608 CH 1H 151J-T | B | 70.5/40.8 |
| C658 | 4030007060 | S.CER C1608 CH 1H 270J-T | B | 68.0/41.5 |
| C659 | 4030007140 | S.CER C1608 CH 1H 121J-T | B | 66.2/41.5 |
| C660 | 4030007060 | S.CER C1608 CH 1H 270J-T | B | 70.5/37.1 |
| C661 | 4030007150 | S.CER C1608 CH 1H 151J-T | B | 70.5/39.0 |
| C662 | 4030007150 | S.CER C1608 CH 1H 151J-T | B | 73.3/34.5 |
| C663 | 4030011600 | S.CER C1608 JB 1E 104K-T | B | 73.3/37.8 |
| C664 | 4030010760 | S.CER C1608 CH 1H 331J-T | B | 75.2/34.5 |
| C665 | 4030007170 | S.CER C1608 CH 1H 221J-T | B | 84.2/52.4 |
| C666 | 4030007170 | S.CER C1608 CH 1H 221J-T | B | 86.0/52.4 |
| C667 | 4030011600 | S.CER C1608 JB 1E 104K-T | B | 84.2/49.1 |
| C668 | 4030007130 | S.CER C1608 CH 1H 101J-T | B | 81.4/49.8 |
| C669 | 4030007050 | S.CER C1608 CH 1H 220J-T | B | 81.4/48.0 |
| C670 | 4030007080 | S.CER C1608 CH 1H 390J-T | B | 77.1/45.5 |
| C671 | 4030007070 | S.CER C1608 CH 1H 330J-T | B | 78.9/45.5 |
| C672 | 4030007050 | S.CER C1608 CH 1H 220J-T | B | 81.4/40.8 |
| C673 | 4030007120 | S.CER C1608 CH 1H 820J-T | B | 81.4/46.2 |
| C674 | 4030007080 | S.CER C1608 CH 1H 390J-T | B | 78.9/41.5 |
| C675 | 4030007070 | S.CER C1608 CH 1H 330J-T | B | 77.1/41.5 |
| C676 | 4030007050 | S.CER C1608 CH 1H 220J-T | B | 81.4/37.1 |
| C677 | 4030007130 | S.CER C1608 CH 1H 101J-T | B | 81.4/39.0 |
| C678 | 4030007170 | S.CER C1608 CH 1H 221J-T | B | 84.2/34.5 |
| C679 | 4030011600 | S.CER C1608 JB 1E 104K-T | B | 84.2/37.8 |
| C680 | 4030007170 | S.CER C1608 CH 1H 221J-T | B | 86.0/34.5 |
| C681 | 4030007170 | S.CER C1608 CH 1H 221J-T | T | 34.3/50.7 |
| C682 | 4030007110 | S.CER C1608 CH 1H 680J-T | T | 35.6/50.7 |
| C683 | 4030011600 | S.CER C1608 JB 1E 104K-T | T | 35.6/47.9 |
| C684 | 4030007090 | S.CER C1608 CH 1H 470J-T | T | 38.3/47.1 |
| C685 | 4030007090 | S.CER C1608 CH 1H 470J-T | T | 38.3/45.8 |
| C686 | 4030007070 | S.CER C1608 CH 1H 330J-T | T | 40.4/46.4 |
| C687 | 4030007070 | S.CER C1608 CH 1H 330J-T | T | 41.7/46.4 |
| C688 | 4030007010 | S.CER C1608 CH 1H 100D-T | T | 36.1/43.5 |
| C689 | 4030007120 | S.CER C1608 CH 1H 820J-T | T | 37.4/43.5 |
| C690 | 4030007070 | S.CER C1608 CH 1H 330J-T | T | 41.7/40.5 |
| C691 | 4030007070 | S.CER C1608 CH 1H 330J-T | T | 40.4/40.5 |
| C692 | 4030007090 | S.CER C1608 CH 1H 470J-T | T | 37.8/41.0 |
| C693 | 4030007090 | S.CER C1608 CH 1H 470J-T | T | 37.8/39.7 |
| C694 | 4030007110 | S.CER C1608 CH 1H 680J-T | T | 34.3/36.2 |
| C695 | 4030011600 | S.CER C1608 JB 1E 104K-T | T | 35.6/39.0 |
| C696 | 4030007050 | S.CER C1608 CH 1H 220J-T | T | 35.6/36.2 |
| C697 | 4030007160 | S.CER C1608 CH 1H 181J-T | T | 44.1/51.5 |
| C698 | 4030007090 | S.CER C1608 CH 1H 470J-T | T | 44.1/50.2 |
| C699 | 4030011600 | S.CER C1608 JB 1E 104K-T | T | 44.6/47.9 |
| C700 | 4030007090 | S.CER C1608 CH 1H 470J-T | T | 46.8/47.1 |
| C701 | 4030007040 | S.CER C1608 CH 1H 180J-T | T | 46.8/45.8 |
| C702 | 4030007030 | S.CER C1608 CH 1H 150J-T | T | 49.3/46.4 |
| C703 | 4030007050 | S.CER C1608 CH 1H 220J-T | T | 50.7/46.4 |
| C704 | 4030006990 | S.CER C1608 CH 1H 080D-T | T | 46.4/43.5 |
| C705 | 4030007090 | S.CER C1608 CH 1H 470J-T | T | 45.1/43.5 |
| C706 | 4030007030 | S.CER C1608 CH 1H 150J-T | T | 49.3/40.5 |
| C707 | 4030007050 | S.CER C1608 CH 1H 220J-T | T | 50.7/40.5 |
| C708 | 4030007040 | S.CER C1608 CH 1H 180J-T | T | 46.8/41.0 |
| C709 | 4030007090 | S.CER C1608 CH 1H 470J-T | T | 46.8/39.7 |
| C710 | 4030007090 | S.CER C1608 CH 1H 470J-T | T | 43.3/36.2 |
| C711 | 4030011600 | S.CER C1608 JB 1E 104K-T | T | 44.6/39.0 |
| C712 | 4030007160 | S.CER C1608 CH 1H 181J-T | T | 44.6/36.2 |
| C713 | 4030007140 | S.CER C1608 CH 1H 121J-T | T | 53.6/50.7 |
| C714 | 4030007040 | S.CER C1608 CH 1H 180J-T | T | 52.3/50.7 |
| C715 | 4030011600 | S.CER C1608 JB 1E 104K-T | T | 53.6/47.9 |
| C716 | 4030007070 | S.CER C1608 CH 1H 330J-T | T | 55.8/47.1 |
| C717 | 4030007040 | S.CER C1608 CH 1H 180J-T | T | 55.8/45.8 |
| C718 | 4030007010 | S.CER C1608 CH 1H 100D-T | T | 58.4/46.4 |
| C719 | 4030007070 | S.CER C1608 CH 1H 330J-T | T | 59.7/46.4 |
| C720 | 4030007010 | S.CER C1608 CH 1H 100D-T | T | 54.1/43.5 |
| C721 | 4030007090 | S.CER C1608 CH 1H 470J-T | T | 55.4/43.5 |
| C722 | 4030007010 | S.CER C1608 CH 1H 100D-T | T | 58.4/40.5 |
| C723 | 4030007070 | S.CER C1608 CH 1H 330J-T | T | 59.7/40.5 |
| C724 | 4030007040 | S.CER C1608 CH 1H 180J-T | T | 55.8/41.0 |
| C725 | 4030007070 | S.CER C1608 CH 1H 330J-T | T | 55.8/39.7 |
| C726 | 4030007040 | S.CER C1608 CH 1H 180J-T | T | 52.3/36.2 |
| C727 | 4030011600 | S.CER C1608 JB 1E 104K-T | T | 53.6/39.0 |
| C728 | 4030007140 | S.CER C1608 CH 1H 121J-T | T | 53.6/36.2 |
| C729 | 4030007130 | S.CER C1608 CH 1H 101J-T | T | 62.6/50.7 |
| C730 | 4030007030 | S.CER C1608 CH 1H 150J-T | T | 61.3/50.7 |
| C731 | 4030011600 | S.CER C1608 JB 1E 104K-T | T | 62.6/47.9 |
| C732 | 4030007050 | S.CER C1608 CH 1H 220J-T | T | 64.8/47.1 |
| C733 | 4030007020 | S.CER C1608 CH 1H 120J-T | T | 64.8/45.8 |
| C734 | 4030009500 | S.CER C1608 CH 1H 0R5B-T | T | 67.4/46.4 |
| C735 | 4030007050 | S.CER C1608 CH 1H 220J-T | T | 68.7/46.4 |
| C736 | 4030006980 | S.CER C1608 CH 1H 070D-T | T | 63.1/43.5 |
| C737 | 4030007050 | S.CER C1608 CH 1H 220J-T | T | 64.4/43.5 |
| C738 | 4030009500 | S.CER C1608 CH 1H 0R5B-T | T | 67.4/40.5 |
| C739 | 4030007050 | S.CER C1608 CH 1H 220J-T | T | 68.7/40.5 |
| C740 | 4030007020 | S.CER C1608 CH 1H 120J-T | T | 64.8/41.0 |
| C741 | 4030007050 | S.CER C1608 CH 1H 220J-T | T | 64.8/39.7 |
| C742 | 4030007030 | S.CER C1608 CH 1H 150J-T | T | 61.3/36.2 |
| C743 | 4030011600 | S.CER C1608 JB 1E 104K-T | T | 62.6/39.0 |
| C744 | 4030007130 | S.CER C1608 CH 1H 101J-T | T | 62.6/36.2 |
| C745 | 4030007140 | S.CER C1608 CH 1H 121J-T | T | 73.5/49.6 |
| C747 | 4030011600 | S.CER C1608 JB 1E 104K-T | T | 71.5/48.8 |
| C749 | 4030009550 | S.CER C1608 CH 1H 2R5B-T | T | 75.9/46.2 |
| C750 | 4030011770 | S.CER C1608 CH 1H 060B-T | T | 73.8/46.9 |
| C751 | 4030007010 | S.CER C1608 CH 1H 100D-T | T | 73.8/45.5 |
| C755 | 4030009550 | S.CER C1608 CH 1H 2R5B-T | T | 75.9/41.0 |
| C756 | 4030011770 | S.CER C1608 CH 1H 060B-T | T | 73.8/40.2 |
| C758 | 4030011600 | S.CER C1608 JB 1E 104K-T | T | 71.5/38.1 |
| C759 | 4030007140 | S.CER C1608 CH 1H 121J-T | T | 73.5/37.3 |
| C760 | 4030011770 | S.CER C1608 CH 1H 060B-T | T | 73.8/48.2 |

Eqv.= This component is equivalent to the REF No. component listed above, and may be substituted on parts orders and repairs.

M.=Mounted side (T: Mounted on the Top side, B: Mounted on the Bottom side)
S.=Surface mount

## [MAIN UNIT]

| REF NO. | PARTS NO. | DESCRIPTION | M. | H/V LOCATION |
|---|---|---|---|---|
| C761 | 4030011770 | S.CER C1608 CH 1H 060B-T | T | 73.8/41.8 |
| C801 | 4030006880 | S.CER C1608 JB 1H 472K-T | T | 37.2/20.6 |
| C802 | 4030011600 | S.CER C1608 JB 1E 104K-T | T | 37.2/27.5 |
| C803 | 4030011600 | S.CER C1608 JB 1E 104K-T | B | 37.2/20.5 |
| C804 | 4030011600 | S.CER C1608 JB 1E 104K-T | T | 46.9/19.9 |
| C805 | 4030011600 | S.CER C1608 JB 1E 104K-T | B | 52.0/24.6 |
| C806 | 4030006900 | S.CER C1608 JB 1H 103K-T | B | 48.5/23.7 |
| C807 | 4030011600 | S.CER C1608 JB 1E 104K-T | T | 48.5/23.9 |
| C812 | 4030006900 | S.CER C1608 JB 1H 103K-T | B | 86.2/84.7 |
| C813 | 4030006880 | S.CER C1608 JB 1H 472K-T | T | 31.2/27.5 |
| C814 | 4030012600 | S.CER C2012 JB 1A 105M-T | T | 27.7/25.5 |
| C815 | 4030006990 | S.CER C1608 CH 1H 080D-T | B | 44.3/21.0 |
| C816 | 4030012600 | S.CER C2012 JB 1A 105M-T | T | 31.0/29.1 |
| C817 | 4030011330 | S.CER C1608 CH 1H 391J-T | T | 85.3/55.1 |
| C818 | 4030017810 | S.CER C1608 CH 1H 102J-T | T | 83.3/53.3 |
| C819 | 4030009920 | S.CER C1608 CH 1H 050B-T | T | 83.3/55.9 |
| C820 | 4030006900 | S.CER C1608 JB 1H 103K-T | T | 74.7/62.2 |
| C821 | 4030011600 | S.CER C1608 JB 1E 104K-T | T | 87.5/62.8 |
| C822 | 4030011600 | S.CER C1608 JB 1E 104K-T | T | 78.4/58.7 |
| C823 | 4030012600 | S.CER C2012 JB 1A 105M-T | T | 86.2/51.5 |
| C824 | 4030006900 | S.CER C1608 JB 1H 103K-T | T | 83.6/49.8 |
| C825 | 4030008880 | S.CER C1608 JB 1H 223K-T | T | 84.4/47.8 |
| C826 | 4030008850 | S.CER C1608 JB 1H 123K-T | T | 82.3/46.8 |
| C827 | 4030008850 | S.CER C1608 JB 1H 123K-T | T | 82.3/45.5 |
| C828 | 4030006900 | S.CER C1608 JB 1H 103K-T | T | 85.7/42.7 |
| C829 | 4030008860 | S.CER C1608 JB 1H 153K-T | T | 82.3/42.7 |
| C830 | 4030008860 | S.CER C1608 JB 1H 153K-T | T | 82.3/41.4 |
| C831 | 4030008650 | S.CER C1608 JB 1H 332K-T | T | 84.4/39.8 |
| C832 | 4030006900 | S.CER C1608 JB 1H 103K-T | T | 82.3/39.6 |
| C833 | 4030006900 | S.CER C1608 JB 1H 103K-T | T | 82.3/38.3 |
| C834 | 4030012600 | S.CER C2012 JB 1A 105M-T | T | 82.1/35.4 |
| C835 | 4030011600 | S.CER C1608 JB 1E 104K-T | T | 82.3/37.0 |
| C836 | 4030009920 | S.CER C1608 CH 1H 050B-T | T | 89.5/58.0 |
| C837 | 4550007500 | S.TAN F931D106MBABMA | T | 73.0/58.7 |
| Eqv. | 4550006470 | S.TAN TEESVB2 1D 106M8R | | |
| C838 | 4550007500 | S.TAN F931D106MBABMA | T | 91.9/61.7 |
| Eqv. | 4550006470 | S.TAN TEESVB2 1D 106M8R | | |
| C839 | 4030006880 | S.CER C1608 JB 1H 472K-T | B | 85.3/74.2 |
| C840 | 4030011600 | S.CER C1608 JB 1E 104K-T | B | 86.0/81.4 |
| C841 | 4030006880 | S.CER C1608 JB 1H 472K-T | B | 81.2/78.3 |
| C845 | 4030011600 | S.CER C1608 JB 1E 104K-T | T | 35.3/69.8 |
| C846 | 4030011600 | S.CER C1608 JB 1E 104K-T | T | 38.1/74.7 |
| C847 | 4510008540 | S.ELE EEE1CA100SR | T | 37.1/77.8 |
| C901 | 4030006880 | S.CER C1608 JB 1H 472K-T | B | 125.3/1.8 |
| C902 | 4030006880 | S.CER C1608 JB 1H 472K-T | T | 124.3/1.8 |
| C903 | 4030006880 | S.CER C1608 JB 1H 472K-T | B | 123.3/1.8 |
| C904 | 4030006880 | S.CER C1608 JB 1H 472K-T | T | 122.3/1.8 |
| C905 | 4030006880 | S.CER C1608 JB 1H 472K-T | B | 121.3/1.9 |
| C906 | 4030006880 | S.CER C1608 JB 1H 472K-T | T | 120.3/1.8 |
| C907 | 4030006880 | S.CER C1608 JB 1H 472K-T | B | 119.3/1.9 |
| C908 | 4030006880 | S.CER C1608 JB 1H 472K-T | T | 118.3/1.8 |
| C909 | 4030006880 | S.CER C1608 JB 1H 472K-T | B | 117.3/1.9 |
| C922 | 4030006880 | S.CER C1608 JB 1H 472K-T | T | 123.8/19.0 |
| C923 | 4030006880 | S.CER C1608 JB 1H 472K-T | B | 122.8/19.5 |
| C924 | 4030006880 | S.CER C1608 JB 1H 472K-T | T | 121.8/19.0 |
| C925 | 4030006880 | S.CER C1608 JB 1H 472K-T | B | 120.8/19.5 |
| C926 | 4030006880 | S.CER C1608 JB 1H 472K-T | T | 119.8/19.0 |
| C927 | 4030006880 | S.CER C1608 JB 1H 472K-T | B | 118.8/19.5 |
| C928 | 4030006880 | S.CER C1608 JB 1H 472K-T | T | 117.8/19.0 |
| C929 | 4030006880 | S.CER C1608 JB 1H 472K-T | B | 116.8/19.5 |
| C930 | 4030006880 | S.CER C1608 JB 1H 472K-T | T | 115.8/19.0 |
| C932 | 4030006880 | S.CER C1608 JB 1H 472K-T | T | 113.8/19.0 |
| C933 | 4030006880 | S.CER C1608 JB 1H 472K-T | B | 112.8/19.5 |
| C934 | 4030006880 | S.CER C1608 JB 1H 472K-T | T | 111.8/19.0 |
| C936 | 4030006880 | S.CER C1608 JB 1H 472K-T | T | 109.8/19.0 |
| C937 | 4030006880 | S.CER C1608 JB 1H 472K-T | B | 108.8/19.5 |
| C945 | 4030006880 | S.CER C1608 JB 1H 472K-T | B | 89.4/1.8 |
| C946 | 4030006880 | S.CER C1608 JB 1H 472K-T | T | 88.4/1.8 |
| C947 | 4030006880 | S.CER C1608 JB 1H 472K-T | B | 87.4/1.8 |
| C948 | 4030006880 | S.CER C1608 JB 1H 472K-T | T | 86.4/1.8 |
| C952 | 4030006880 | S.CER C1608 JB 1H 472K-T | T | 82.4/1.8 |
| C953 | 4030006880 | S.CER C1608 JB 1H 472K-T | B | 81.4/1.8 |
| C954 | 4030006880 | S.CER C1608 JB 1H 472K-T | T | 80.4/1.8 |
| C955 | 4030006880 | S.CER C1608 JB 1H 472K-T | B | 79.4/1.8 |
| C957 | 4030006880 | S.CER C1608 JB 1H 472K-T | B | 77.4/1.8 |
| C958 | 4030006880 | S.CER C1608 JB 1H 472K-T | T | 76.4/1.9 |
| C974 | 4030006880 | S.CER C1608 JB 1H 472K-T | T | 79.9/19.4 |
| C975 | 4030006880 | S.CER C1608 JB 1H 472K-T | B | 78.9/19.4 |
| C976 | 4030006880 | S.CER C1608 JB 1H 472K-T | T | 77.9/19.4 |
| C977 | 4030006880 | S.CER C1608 JB 1H 472K-T | B | 76.9/19.4 |
| C978 | 4030006880 | S.CER C1608 JB 1H 472K-T | T | 75.9/19.4 |
| C979 | 4030006880 | S.CER C1608 JB 1H 472K-T | B | 74.9/19.4 |
| C980 | 4030006880 | S.CER C1608 JB 1H 472K-T | T | 12.8/30.0 |
| C981 | 4030006880 | S.CER C1608 JB 1H 472K-T | T | 126.3/1.8 |
| | | | | |
| RL50 | 6330001940 | REL EDR0011A0900Z <SLVJ> | | |
| RL140 | 6330001430 | REL NA-12W-K | | |
| RL141 | 6330001430 | REL NA-12W-K | | |
| | | | | |
| CP81 | 6910009670 | S.CHE HK3-S-T | T | 129.3/16.1 |
| CP82 | 6910009670 | S.CHE HK3-S-T | T | 116.4/75.1 |
| CP495 | 6910009670 | S.CHE HK3-S-T | T | 129.1/5.8 |
| CP496 | 6910009670 | S.CHE HK3-S-T | T | 107.1/5.8 |
| | | | | |
| J1 | 6510023671 | CON TCS4480-0141577 | | |
| J2 | 6510023661 | CON TCS4470-0141577 | | |
| J3 | 6510023671 | CON TCS4480-0141577 | | |
| J4 | 6510023661 | CON TCS4470-0141577 | | |
| J5 | 6450001130 | CON JPJ2042-01-110 | | |
| J6 | 6510023730 | CON LGY6502-0600C | | |
| J7 | 6510023730 | CON LGY6502-0600C | | |
| J8 | 6510023740 | CON LGR4609-7000 | | |

## [MAIN UNIT]

| REF NO. | PARTS NO. | DESCRIPTION | M. | H/V LOCATION |
|---|---|---|---|---|
| J9 | 6510024940 | CON HEC2305-016250 | | |
| J140 | 6510023720 | CON LGY6501-0600C | | |
| J141 | 6510023720 | CON LGY6501-0600C | | |
| J142 | 6510018961 | S.CON B2B-PH-SM4-TB(LF)(SN) | T | 256.2/96.5 |
| J340 | 6510022811 | CON IMSA-9180B-22B-PT1 | | |
| J341 | 6510021651 | CON IMSA-9180B-30B-PT1 | | |
| J360 | 6510022811 | CON IMSA-9180B-22B-PT1 | | |
| J361 | 6510021651 | CON IMSA-9180B-30B-PT1 | | |
| J380 | 6510022811 | CON IMSA-9180B-22B-PT1 | | |
| J381 | 6510021651 | CON IMSA-9180B-30B-PT1 | | |
| J399 | 6510028210 | CON SJ050010 (TMP-J01X-V6) | | |
| J400 | 6510019981 | S.CON 52808-1671(1690) | T | 232.8/5.0 |
| J401 | 6510022191 | S.CON B3B-PH-SM4-TB(LF)(SN) | T | 232.7/98.9 |
| J403 | 6510019981 | S.CON 52808-1671(1690) | T | 32.6/5.0 |
| J404 | 6510022191 | S.CON B3B-PH-SM4-TB(LF)(SN) | T | 143.8/115.4 |
| J410 | 6510020001 | S.CON 52808-3071(3090) | T | 5.6/42.5 |
| J411 | 6510019971 | S.CON 52808-1071 | T | 5.6/98.7 |
| J430 | 6510022311 | S.CON B5B-PH-SM4-TB(LF)(SN) | T | 5.0/73.0 |
| J440 | 6510018921 | S.CON B8B-PH-SM4-TB(LF)(SN) | T | 154.5/5.0 |
| J450 | 6510003471 | CON B11B-EH-S(LF)(SN) | | |
| J451 | 6510018941 | S.CON B13B-PH-SM4-TB(LF)(SN) | T | 184.2/5.0 |
| J490 | 6510023751 | CON 01K1971-20 | | |
| J491 | 6510028210 | CON SJ050010 (TMP-J01X-V6) | | |
| J492 | 6510014961 | S.CON B2B-ZR-SM4-TF(LF)(SN) | T | 202.6/11.5 |
| J495 | 6510029420 | CON PLR135/T8 | | |
| J496 | 6510029430 | CON PLT133/T8 | | |
| J501 | 6510028210 | CON SJ050010 (TMP-J01X-V6) | | |
| J502 | 6510028210 | CON SJ050010 (TMP-J01X-V6) | | |
| J503 | 6510028210 | CON SJ050010 (TMP-J01X-V6) | | |
| J801 | 6510028210 | CON SJ050010 (TMP-J01X-V6) | | |
| J802 | 6510028210 | CON SJ050010 (TMP-J01X-V6) | | |
| J808 | 6510028210 | CON SJ050010 (TMP-J01X-V6) | | |
| J900 | 6510022472 | S.CON 40FLT-SM2-TB(LF)(SN)(M) | T | 116.5/10.6 |
| J901 | 6510015541 | S.CON B4B-ZR-SM4-TF(LF)(SN) | T | 9.2/113.0 |
| J940 | 6510022472 | S.CON 40FLT-SM2-TB(LF)(SN)(M) | T | 84.6/10.6 |
| | | | | |
| F1 | 5220000230 | HOL S-N5054 #01 | | |
| F2 | 5220000230 | HOL S-N5054 #01 | | |
| F3 | 5210000041 | FUS FGB 2A PBF (FGB0 125V) | | |
| | | | | |
| W1 | 9024801019 | JUM 74/98/020/X98/X98 | | |
| | | | | |
| EP50 | 6910012350 | S.BEA MMZ1608Y 102BT | B | 78.1/126.8 |
| EP51 | 6910012350 | S.BEA MMZ1608Y 102BT | B | 95.6/118.7 |
| EP52 | 6910012350 | S.BEA MMZ1608Y 102BT | B | 90.1/126.1 |
| EP403 | 6910012350 | S.BEA MMZ1608Y 102BT | T | 233.3/10.4 |
| EP404 | 6910012350 | S.BEA MMZ1608Y 102BT | T | 232.0/10.4 |
| EP408 | 6910012350 | S.BEA MMZ1608Y 102BT | T | 32.1/10.0 |
| EP409 | 6910012350 | S.BEA MMZ1608Y 102BT | T | 30.8/10.0 |
| EP414 | 6910012350 | S.BEA MMZ1608Y 102BT | T | 9.9/34.0 |
| EP415 | 6910012350 | S.BEA MMZ1608Y 102BT | B | 9.9/31.0 |
| EP416 | 6910012350 | S.BEA MMZ1608Y 102BT | B | 10.2/95.0 |
| EP417 | 6910012350 | S.BEA MMZ1608Y 102BT | T | 10.2/96.2 |
| EP420 | 6910012350 | S.BEA MMZ1608Y 102BT | B | 10.1/101.2 |
| EP421 | 6910012350 | S.BEA MMZ1608Y 102BT | T | 10.1/102.2 |
| EP430 | 6910012350 | S.BEA MMZ1608Y 102BT | B | 5.8/69.0 |
| EP431 | 6910012350 | S.BEA MMZ1608Y 102BT | B | 5.8/71.0 |
| EP432 | 6910012350 | S.BEA MMZ1608Y 102BT | B | 5.8/73.0 |
| EP901 | 6910015970 | S.BEA MMZ1608B 301CT-AS | B | 106.8/15.4 |
| EP905 | 6910012350 | S.BEA MMZ1608Y 102BT | B | 121.3/5.8 |
| EP907 | 6910012350 | S.BEA MMZ1608Y 102BT | B | 119.3/5.8 |

Eqv.= This component is equivalent to the REF No. component listed above, and may be substituted on parts orders and repairs.

M.=Mounted side (T: Mounted on the Top side, B: Mounted on the Bottom side)
S.=Surface mount

## [DSP-A UNIT]

| REF NO. | PARTS NO. | DESCRIPTION | | M. | H/V LOCATION |
|---|---|---|---|---|---|
| IC1 | 1140012211 | S.IC | TMS320C6713BZDP225 <FE> | T | 28.1/20.5 |
| IC151 | 1130008361 | S.IC | TC7SHU04FU(TE85LJF) | B | 45.6/8.1 |
| IC171 | 1130008041 | S.IC | TC7SH04FU(TE85LJF) | T | 41.4/4.7 |
| IC181 | 1130011151 | S.IC | SN74AHC2G08HDCT3 | T | 30.2/2.0 |
| IC191 | 1130011151 | S.IC | SN74AHC2G08HDCT3 | T | 24.0/3.6 |
| IC201 | 1130013493 | S.IC | AT29LV040A-15TU(SX-2590E-12) | B | 29.0/42.0 |
| IC203 | 1110006411 | S.IC | R3111N111A-TR-F | T | 30.1/36.5 |
| IC301 | 1110006100 | S.IC | NJM5534MD-TE1-#ZZZB | T | 72.4/44.8 |
| IC331 | 1130009981 | S.IC | TC7W53FK(TE85LF) | T | 76.9/34.1 |
| IC341 | 1110006100 | S.IC | NJM5534MD-TE1-#ZZZB | T | 70.3/35.6 |
| IC371 | 1110006100 | S.IC | NJM5534MD-TE1-#ZZZB | T | 59.5/44.4 |
| IC401 | 1110006111 | S.IC | AK5394AVSP/P | T | 54.3/31.0 |
| IC451 | 1130006891 | S.IC | TC7S04FU(TE85RF) | T | 43.5/41.0 |
| IC452 | 1130012160 | S.IC | SN74LVC1GU04DCKR | T | 42.8/38.5 |
| IC501 | 1110001901 | S.IC | UPC4570G2-E1-A | T | 71.7/27.5 |
| IC551 | 1130013090 | S.IC | AK4396VFP-E2/P | T | 54.7/7.4 |
| IC601 | 1110006100 | S.IC | NJM5534MD-TE1-#ZZZB | T | 63.7/17.4 |
| IC651 | 1110006100 | S.IC | NJM5534MD-TE1-#ZZZB | T | 66.8/7.3 |
| IC701 | 1110006100 | S.IC | NJM5534MD-TE1-#ZZZB | T | 74.2/17.5 |
| IC771 | 1110004770 | S.IC | BU9480F-E2 | T | 51.7/18.5 |
| Q1 | 1590000680 | S.TRA | DTC114EUA T106 | T | 45.8/16.6 |
| D501 | 1730002321 | S.ZEN | MAZ8051GML | B | 76.5/29.6 |
| FI101 | 2040000790 | S.LC | EXCCET103U | T | 36.5/2.9 |
| X151 | 6050011660 | S.XTA | CR-754 SMD-49 30.000 MHz <KDS> | B | 40.6/2.9 |
| L1 | 6200003950 | S.COI | HF50ACC 322513-T | B | 43.3/34.8 |
| L2 | 6180003501 | S.COI | SLF6028T-100M1R3-PF | B | 13.7/35.8 |
| L3 | 6200003640 | S.COI | MLF1608E 100K-T | B | 12.3/8.2 |
| L401 | 6200003950 | S.COI | HF50ACC 322513-T | T | 49.3/42.9 |
| L921 | 6200003950 | S.COI | HF50ACC 322513-T | T | 73.7/4.4 |
| L922 | 6200003950 | S.COI | HF50ACC 322513-T | T | 78.0/9.5 |
| L924 | 6200003950 | S.COI | HF50ACC 322513-T | T | 74.2/9.6 |
| L925 | 6200003950 | S.COI | HF50ACC 322513-T | T | 77.5/4.4 |
| L961 | 6200003950 | S.COI | HF50ACC 322513-T | B | 11.3/12.2 |
| L962 | 6200003950 | S.COI | HF50ACC 322513-T | B | 12.9/24.6 |
| R1 | 7030003560 | S.RES | ERJ3GEYJ 103 V (10K) | B | 42.6/22.4 |
| R2 | 7030003560 | S.RES | ERJ3GEYJ 103 V (10K) | B | 41.8/24.2 |
| R3 | 7030003560 | S.RES | ERJ3GEYJ 103 V (10K) | B | 42.6/21.1 |
| R4 | 7030003560 | S.RES | ERJ3GEYJ 103 V (10K) | B | 41.8/13.7 |
| R5 | 7030003440 | S.RES | ERJ3GEYJ 102 V (1K) | B | 23.2/6.0 |
| R6 | 7030003440 | S.RES | ERJ3GEYJ 102 V (1K) | B | 21.9/6.0 |
| R7 | 7030003640 | S.RES | ERJ3GEYJ 473 V (47K) | B | 20.1/6.8 |
| R8 | 7030003440 | S.RES | ERJ3GEYJ 102 V (1K) | B | 14.2/8.2 |
| R9 | 7030003640 | S.RES | ERJ3GEYJ 473 V (47K) | B | 14.5/11.7 |
| R10 | 7030003640 | S.RES | ERJ3GEYJ 473 V (47K) | T | 43.8/13.1 |
| R11 | 7030003460 | S.RES | ERJ3GEYJ 152 V (1.5K) | B | 48.2/9.7 |
| R12 | 7030003560 | S.RES | ERJ3GEYJ 103 V (10K) | B | 26.8/13.4 |
| R151 | 7030003320 | S.RES | ERJ3GEYJ 101 V (100) | T | 44.4/5.4 |
| R152 | 7030003800 | S.RES | ERJ3GEYJ 105 V (1M) | B | 43.5/6.2 |
| R171 | 7030003320 | S.RES | ERJ3GEYJ 101 V (100) | T | 41.3/1.4 |
| R181 | 7030003560 | S.RES | ERJ3GEYJ 103 V (10K) | T | 9.2/7.1 |
| R182 | 7030003560 | S.RES | ERJ3GEYJ 103 V (10K) | T | 6.4/7.1 |
| R183 | 7030003560 | S.RES | ERJ3GEYJ 103 V (10K) | T | 11.9/8.4 |
| R184 | 7030003560 | S.RES | ERJ3GEYJ 103 V (10K) | T | 11.9/7.1 |
| R201 | 7030003860 | S.RES | ERJ3GE JPW V | T | 30.9/39.2 |
| R301 | 7030003860 | S.RES | ERJ3GE JPW V | T | 79.6/38.5 |
| R302 | 7030009591 | S.RES | ERA3YED 472V (4.7K) | T | 77.6/46.9 |
| R303 | 7030009591 | S.RES | ERA3YED 472V (4.7K) | T | 75.8/46.2 |
| R304 | 7030003320 | S.RES | ERJ3GEYJ 101 V (100) | T | 78.2/40.8 |
| R305 | 7030003860 | S.RES | ERJ3GE JPW V | T | 75.8/43.6 |
| R306 | 7030003320 | S.RES | ERJ3GEYJ 101 V (100) | T | 69.0/46.2 |
| R331 | 7030003500 | S.RES | ERJ3GEYJ 332 V (3.3K) | T | 64.4/40.0 |
| R332 | 7030003480 | S.RES | ERJ3GEYJ 222 V (2.2K) | T | 65.7/40.0 |
| R333 | 7030003640 | S.RES | ERJ3GEYJ 473 V (47K) | T | 75.0/33.2 |
| R341 | 7030003320 | S.RES | ERJ3GEYJ 101 V (100) | T | 73.7/34.9 |
| R342 | 7030003320 | S.RES | ERJ3GEYJ 101 V (100) | T | 66.9/37.4 |
| R343 | 7030006601 | S.RES | ERA3YED 272V (2.7K) | T | 73.7/37.5 |
| R344 | 7030010390 | S.RES | ERA3YED 821V (820) | T | 65.6/33.7 |
| R345 | 7030009691 | S.RES | ERA3YED 101V (100) | T | 66.3/31.7 |
| R371 | 7030003320 | S.RES | ERJ3GEYJ 101 V (100) | T | 63.4/43.9 |
| R372 | 7030003320 | S.RES | ERJ3GEYJ 101 V (100) | T | 55.3/46.3 |
| R373 | 7030006601 | S.RES | ERA3YED 272V (2.7K) | T | 63.4/45.7 |
| R374 | 7030010390 | S.RES | ERA3YED 821V (820) | T | 54.7/41.9 |
| R375 | 7030009691 | S.RES | ERA3YED 101V (100) | T | 56.1/40.6 |
| R401 | 7030009591 | S.RES | ERA3YED 472V (4.7K) | T | 53.2/42.6 |
| R402 | 7030009591 | S.RES | ERA3YED 472V (4.7K) | T | 51.9/44.1 |
| R403 | 7030003640 | S.RES | ERJ3GEYJ 473 V (47K) | T | 54.2/38.7 |
| R404 | 7030003200 | S.RES | ERJ3GEYJ 100 V (10) | T | 50.1/40.0 |
| R405 | 7030003320 | S.RES | ERJ3GEYJ 101 V (100) | T | 51.1/38.2 |
| R406 | 7030003640 | S.RES | ERJ3GEYJ 473 V (47K) | T | 49.8/38.2 |
| R407 | 7030003460 | S.RES | ERJ3GEYJ 152 V (1.5K) | B | 46.9/36.1 |
| R409 | 7030003640 | S.RES | ERJ3GEYJ 473 V (47K) | T | 52.3/23.9 |
| R410 | 7030003640 | S.RES | ERJ3GEYJ 473 V (47K) | T | 47.3/23.9 |
| R411 | 7030003640 | S.RES | ERJ3GEYJ 473 V (47K) | T | 49.8/23.9 |
| R412 | 7030003520 | S.RES | ERJ3GEYJ 472 V (4.7K) | T | 56.1/22.3 |
| R413 | 7030003520 | S.RES | ERJ3GEYJ 472 V (4.7K) | T | 54.2/21.9 |
| R451 | 7030003800 | S.RES | ERJ3GEYJ 105 V (1M) | T | 42.6/36.6 |
| R501 | 7030006521 | S.RES | ERA3YED 561V (560) | T | 76.2/30.0 |
| R502 | 7030003360 | S.RES | ERJ3GEYJ 221 V (220) | T | 70.4/23.5 |
| R503 | 7030003380 | S.RES | ERJ3GEYJ 331 V (330) | T | 65.3/29.0 |
| R504 | 7030003680 | S.RES | ERJ3GEYJ 104 V (100K) | T | 65.3/27.7 |
| R551 | 7030003320 | S.RES | ERJ3GEYJ 101 V (100) | T | 49.5/8.7 |
| R559 | 7030003640 | S.RES | ERJ3GEYJ 473 V (47K) | T | 59.9/10.6 |

## [DSP-A UNIT]

| REF NO. | PARTS NO. | DESCRIPTION | | M. | H/V LOCATION |
|---|---|---|---|---|---|
| R601 | 7030006521 | S.RES | ERA3YED 561V (560) | T | 63.1/20.8 |
| R602 | 7030007661 | S.RES | ERA3YED 331V (330) | T | 64.1/22.1 |
| R603 | 7030007661 | S.RES | ERA3YED 331V (330) | T | 59.0/19.9 |
| R604 | 7030009961 | S.RES | ERA3YED 221V (220) | T | 68.8/21.0 |
| R605 | 7030007661 | S.RES | ERA3YED 331V (330) | T | 65.7/20.8 |
| R606 | 7030003320 | S.RES | ERJ3GEYJ 101 V (100) | T | 67.2/14.0 |
| R607 | 7030003320 | S.RES | ERJ3GEYJ 101 V (100) | T | 61.9/14.0 |
| R651 | 7030006521 | S.RES | ERA3YED 561V (560) | T | 64.4/10.7 |
| R652 | 7030007661 | S.RES | ERA3YED 331V (330) | T | 65.4/12.0 |
| R653 | 7030007661 | S.RES | ERA3YED 331V (330) | T | 62.2/10.2 |
| R654 | 7030009961 | S.RES | ERA3YED 221V (220) | T | 69.6/10.7 |
| R655 | 7030007661 | S.RES | ERA3YED 331V (330) | T | 67.0/10.7 |
| R658 | 7030003320 | S.RES | ERJ3GEYJ 101 V (100) | T | 67.8/3.9 |
| R659 | 7030003320 | S.RES | ERJ3GEYJ 101 V (100) | T | 64.1/3.9 |
| R701 | 7030010770 | S.RES | ERA3YED 681V (680) | T | 71.4/21.0 |
| R702 | 7030009861 | S.RES | ERA3YED 471V (470) | T | 74.8/22.7 |
| R703 | 7030010770 | S.RES | ERA3YED 681V (680) | T | 70.6/13.6 |
| R704 | 7030009861 | S.RES | ERA3YED 471V (470) | T | 77.3/13.4 |
| R705 | 7030009691 | S.RES | ERA3YED 101V (100) | T | 77.4/22.2 |
| R706 | 7030003320 | S.RES | ERJ3GEYJ 101 V (100) | T | 77.4/20.9 |
| R707 | 7030003320 | S.RES | ERJ3GEYJ 101 V (100) | T | 74.1/14.1 |
| R801 | 7030003650 | S.RES | ERJ3GEYJ 563 V (56K) | T | 78.0/27.2 |
| R802 | 7030003680 | S.RES | ERJ3GEYJ 104 V (100K) | T | 78.0/25.9 |
| R803 | 7030003480 | S.RES | ERJ3GEYJ 222 V (2.2K) | T | 78.8/24.1 |
| R804 | 7030003490 | S.RES | ERJ3GEYJ 272 V (2.7K) | T | 78.0/29.8 |
| R805 | 7030003340 | S.RES | ERJ3GEYJ 151 V (150) | T | 78.0/28.5 |
| R901 | 7030003860 | S.RES | ERJ3GE JPW V | T | 46.7/21.0 |
| R962 | 7030003320 | S.RES | ERJ3GEYJ 101 V (100) | T | 12.1/16.9 |
| R963 | 7030003320 | S.RES | ERJ3GEYJ 101 V (100) | T | 11.9/15.6 |
| R964 | 7030003320 | S.RES | ERJ3GEYJ 101 V (100) | T | 11.9/14.3 |
| R965 | 7030003320 | S.RES | ERJ3GEYJ 101 V (100) | T | 11.9/13.0 |
| R967 | 7030003320 | S.RES | ERJ3GEYJ 101 V (100) | T | 13.7/37.9 |
| R968 | 7030003320 | S.RES | ERJ3GEYJ 101 V (100) | T | 11.9/11.7 |
| R969 | 7030003320 | S.RES | ERJ3GEYJ 101 V (100) | T | 13.7/48.3 |
| R970 | 7030003320 | S.RES | ERJ3GEYJ 101 V (100) | T | 13.7/47.0 |
| R971 | 7030003320 | S.RES | ERJ3GEYJ 101 V (100) | T | 13.7/45.7 |
| R972 | 7030003320 | S.RES | ERJ3GEYJ 101 V (100) | T | 13.7/44.4 |
| R973 | 7030003320 | S.RES | ERJ3GEYJ 101 V (100) | T | 13.7/43.1 |
| R974 | 7030003320 | S.RES | ERJ3GEYJ 101 V (100) | T | 13.7/41.8 |
| R975 | 7030003320 | S.RES | ERJ3GEYJ 101 V (100) | T | 13.7/40.5 |
| R976 | 7030003320 | S.RES | ERJ3GEYJ 101 V (100) | T | 13.7/39.2 |
| C1 | 4030011600 | S.CER | C1608 JB 1E 104K-T | B | 15.3/30.6 |
| C2 | 4030011600 | S.CER | C1608 JB 1E 104K-T | B | 41.8/30.8 |
| C3 | 4030011600 | S.CER | C1608 JB 1E 104K-T | B | 18.1/32.9 |
| C4 | 4030011600 | S.CER | C1608 JB 1E 104K-T | B | 39.4/33.0 |
| C5 | 4030011600 | S.CER | C1608 JB 1E 104K-T | B | 23.1/26.4 |
| C6 | 4030011600 | S.CER | C1608 JB 1E 104K-T | B | 24.4/26.4 |
| C7 | 4030011600 | S.CER | C1608 JB 1E 104K-T | B | 28.7/26.4 |
| C8 | 4030011600 | S.CER | C1608 JB 1E 104K-T | B | 30.0/26.4 |
| C9 | 4030011600 | S.CER | C1608 JB 1E 104K-T | B | 33.9/26.4 |
| C10 | 4030011600 | S.CER | C1608 JB 1E 104K-T | B | 21.5/23.4 |
| C11 | 4030011600 | S.CER | C1608 JB 1E 104K-T | B | 36.0/23.8 |
| C12 | 4030011600 | S.CER | C1608 JB 1E 104K-T | T | 13.7/21.1 |
| C13 | 4030011600 | S.CER | C1608 JB 1E 104K-T | B | 22.3/20.2 |
| C14 | 4030011600 | S.CER | C1608 JB 1E 104K-T | B | 36.0/21.2 |
| C15 | 4030011600 | S.CER | C1608 JB 1E 104K-T | B | 22.3/18.9 |
| C16 | 4030011600 | S.CER | C1608 JB 1E 104K-T | B | 36.0/18.6 |
| C17 | 4030011600 | S.CER | C1608 JB 1E 104K-T | T | 43.6/20.1 |
| C18 | 4030011600 | S.CER | C1608 JB 1E 104K-T | B | 22.3/15.2 |
| C19 | 4030011600 | S.CER | C1608 JB 1E 104K-T | B | 34.7/14.5 |
| C20 | 4030011600 | S.CER | C1608 JB 1E 104K-T | B | 23.2/13.4 |
| C21 | 4030011600 | S.CER | C1608 JB 1E 104K-T | B | 24.5/13.4 |
| C22 | 4030011600 | S.CER | C1608 JB 1E 104K-T | B | 28.1/13.4 |
| C23 | 4030011600 | S.CER | C1608 JB 1E 104K-T | B | 32.6/12.6 |
| C24 | 4030011600 | S.CER | C1608 JB 1E 104K-T | B | 35.3/12.6 |
| C25 | 4030011600 | S.CER | C1608 JB 1E 104K-T | B | 17.3/6.8 |
| C26 | 4030011600 | S.CER | C1608 JB 1E 104K-T | B | 33.1/6.8 |
| C27 | 4030011600 | S.CER | C1608 JB 1E 104K-T | B | 41.8/11.1 |
| C28 | 4030011600 | S.CER | C1608 JB 1E 104K-T | B | 15.5/8.2 |
| C29 | 4030011600 | S.CER | C1608 JB 1E 104K-T | B | 40.9/6.8 |
| C30 | 4030011600 | S.CER | C1608 JB 1E 104K-T | T | 35.2/5.0 |
| C31 | 4030011600 | S.CER | C1608 JB 1E 104K-T | T | 28.5/5.3 |
| C32 | 4030011600 | S.CER | C1608 JB 1E 104K-T | T | 37.8/5.0 |
| C33 | 4030011600 | S.CER | C1608 JB 1E 104K-T | T | 18.5/35.2 |
| C34 | 4030011600 | S.CER | C1608 JB 1E 104K-T | T | 36.5/35.0 |
| C35 | 4030011600 | S.CER | C1608 JB 1E 104K-T | B | 26.1/32.9 |
| C36 | 4030011600 | S.CER | C1608 JB 1E 104K-T | B | 29.4/32.9 |
| C37 | 4030011600 | S.CER | C1608 JB 1E 104K-T | B | 36.8/33.0 |
| C38 | 4030011600 | S.CER | C1608 JB 1E 104K-T | B | 15.3/28.0 |
| C39 | 4030011600 | S.CER | C1608 JB 1E 104K-T | B | 22.4/32.9 |
| C40 | 4030011600 | S.CER | C1608 JB 1E 104K-T | B | 26.1/26.4 |
| C41 | 4030011600 | S.CER | C1608 JB 1E 104K-T | B | 21.8/26.4 |
| C42 | 4030011600 | S.CER | C1608 JB 1E 104K-T | B | 27.4/26.4 |
| C43 | 4030011600 | S.CER | C1608 JB 1E 104K-T | B | 32.6/26.4 |
| C44 | 4030011600 | S.CER | C1608 JB 1E 104K-T | B | 35.2/26.4 |
| C45 | 4030011600 | S.CER | C1608 JB 1E 104K-T | B | 41.8/26.8 |
| C46 | 4030011600 | S.CER | C1608 JB 1E 104K-T | B | 15.4/25.0 |
| C47 | 4030011600 | S.CER | C1608 JB 1E 104K-T | T | 43.6/29.1 |
| C48 | 4030011600 | S.CER | C1608 JB 1E 104K-T | B | 22.3/21.5 |
| C49 | 4030011600 | S.CER | C1608 JB 1E 104K-T | B | 41.8/18.0 |
| C50 | 4030011600 | S.CER | C1608 JB 1E 104K-T | B | 22.3/17.6 |
| C51 | 4030011600 | S.CER | C1608 JB 1E 104K-T | B | 36.0/16.0 |
| C52 | 4030011600 | S.CER | C1608 JB 1E 104K-T | B | 15.8/11.7 |
| C53 | 4030011600 | S.CER | C1608 JB 1E 104K-T | B | 21.9/13.4 |
| C54 | 4030011600 | S.CER | C1608 JB 1E 104K-T | T | 43.0/10.0 |
| C55 | 4030011600 | S.CER | C1608 JB 1E 104K-T | B | 29.4/13.4 |
| C56 | 4030011600 | S.CER | C1608 JB 1E 104K-T | B | 25.1/6.8 |
| C57 | 4030011600 | S.CER | C1608 JB 1E 104K-T | B | 29.8/6.8 |
| C58 | 4030011600 | S.CER | C1608 JB 1E 104K-T | B | 38.3/6.8 |
| C59 | 4030011600 | S.CER | C1608 JB 1E 104K-T | T | 20.3/5.3 |
| C60 | 4510007130 | S.ELE | EEFCD 0J 470R | T | 19.7/44.0 |
| C61 | 4550007480 | S.TAN | F930J106MAABMA | B | 44.9/29.7 |
| C62 | 4510007130 | S.ELE | EEFCD 0J 470R | T | 25.8/44.0 |

Eqv.= This component is equivalent to the REF No. component listed above, and may be substituted on parts orders and repairs.

M.=Mounted side (T: Mounted on the Top side, B: Mounted on the Bottom side)
S.=Surface mount

## [DSP-A UNIT]

| REF NO. | PARTS NO. | DESCRIPTION | M. | H/V LOCATION |
|---|---|---|---|---|
| C101 | 4030011600 | S.CER C1608 JB 1E 104K-T | B | 35.7/6.8 |
| C102 | 4550007480 | S.TAN F930J106MAABMA | B | 30.7/2.7 |
| C151 | 4030011600 | S.CER C1608 JB 1E 104K-T | B | 45.6/10.0 |
| C152 | 4030007030 | S.CER C1608 CH 1H 150J-T | B | 46.1/6.2 |
| C153 | 4030007030 | S.CER C1608 CH 1H 150J-T | B | 43.1/8.1 |
| C171 | 4030011600 | S.CER C1608 JB 1E 104K-T | T | 41.3/2.8 |
| C181 | 4030011600 | S.CER C1608 JB 1E 104K-T | T | 31.1/4.3 |
| C191 | 4030011600 | S.CER C1608 JB 1E 104K-T | T | 22.6/1.2 |
| C201 | 4030011600 | S.CER C1608 JB 1E 104K-T | B | 41.4/43.3 |
| C301 | 4340000250 | S.MYL ECHU 1C 104JX5 | T | 77.9/44.1 |
| C302 | 4550007500 | S.TAN F931D106MBABMA | B | 76.5/43.8 |
| Eqv. | 4550006470 | S.TAN TEESVB2 1D 106M8R | | |
| C303 | 4030011600 | S.CER C1608 JB 1E 104K-T | T | 75.7/40.9 |
| C304 | 4550007500 | S.TAN F931D106MBABMA | B | 71.7/43.8 |
| Eqv. | 4550006470 | S.TAN TEESVB2 1D 106M8R | | |
| C305 | 4030011600 | S.CER C1608 JB 1E 104K-T | T | 67.7/46.2 |
| C306 | 4030007050 | S.CER C1608 CH 1H 220J-T | T | 72.5/40.2 |
| C331 | 4030011600 | S.CER C1608 JB 1E 104K-T | T | 78.8/32.9 |
| C332 | 4550007520 | S.TAN F931A106MAABMA | B | 67.9/35.3 |
| C333 | 4030011600 | S.CER C1608 JB 1E 104K-T | T | 79.6/35.9 |
| C341 | 4550007500 | S.TAN F931D106MBABMA | B | 73.2/32.5 |
| Eqv. | 4550006470 | S.TAN TEESVB2 1D 106M8R | | |
| C342 | 4030011600 | S.CER C1608 JB 1E 104K-T | T | 73.7/31.7 |
| C343 | 4550007500 | S.TAN F931D106MBABMA | B | 73.3/38.2 |
| Eqv. | 4550006470 | S.TAN TEESVB2 1D 106M8R | | |
| C344 | 4030011600 | S.CER C1608 JB 1E 104K-T | T | 65.6/37.4 |
| C345 | 4340000250 | S.MYL ECHU 1C 104JX5 | T | 76.8/38.1 |
| C346 | 4030018580 | S.CER C1608 CH 1H 821J-T | T | 66.9/33.7 |
| C347 | 4030011600 | S.CER C1608 JB 1E 104K-T | T | 66.2/35.5 |
| C348 | 4030007050 | S.CER C1608 CH 1H 220J-T | T | 70.9/30.9 |
| C371 | 4550007500 | S.TAN F931D106MBABMA | B | 59.8/43.9 |
| Eqv. | 4550006470 | S.TAN TEESVB2 1D 106M8R | | |
| C372 | 4030011600 | S.CER C1608 JB 1E 104K-T | T | 63.4/42.6 |
| C373 | 4550007500 | S.TAN F931D106MBABMA | B | 50.2/43.9 |
| Eqv. | 4550006470 | S.TAN TEESVB2 1D 106M8R | | |
| C374 | 4030011600 | S.CER C1608 JB 1E 104K-T | T | 53.5/45.6 |
| C375 | 4340000250 | S.MYL ECHU 1C 104JX5 | T | 68.1/42.6 |
| C376 | 4030018580 | S.CER C1608 CH 1H 821J-T | T | 56.1/43.2 |
| C377 | 4030011600 | S.CER C1608 JB 1E 104K-T | T | 55.3/45.0 |
| C378 | 4030007050 | S.CER C1608 CH 1H 220J-T | T | 59.5/39.6 |
| C401 | 4550007520 | S.TAN F931A106MAABMA | B | 55.0/43.8 |
| C402 | 4030017840 | S.CER C2012 CH 1H 222J-T | T | 58.2/37.7 |
| C403 | 4550007480 | S.TAN F930J106MAABMA | B | 63.1/35.3 |
| C404 | 4030011810 | S.CER C1608 JB 1A 224K-T | T | 61.6/37.5 |
| C405 | 4550007480 | S.TAN F930J106MAABMA | B | 58.3/35.3 |
| C406 | 4030011810 | S.CER C1608 JB 1A 224K-T | T | 63.5/36.7 |
| C407 | 4550007480 | S.TAN F930J106MAABMA | B | 50.5/36.2 |
| C408 | 4030011600 | S.CER C1608 JB 1E 104K-T | T | 54.2/37.4 |
| C409 | 4030011600 | S.CER C1608 JB 1E 104K-T | T | 54.2/23.2 |
| C410 | 4030009000 | S.CER C2012 JB 1C 224K-T | T | 62.2/24.3 |
| C411 | 4550007480 | S.TAN F930J106MAABMA | B | 63.1/28.5 |
| C412 | 4550007480 | S.TAN F930J106MAABMA | B | 58.3/29.2 |
| C413 | 4030009000 | S.CER C2012 JB 1C 224K-T | T | 59.0/22.5 |
| C414 | 4030011600 | S.CER C1608 JB 1E 104K-T | T | 54.2/24.5 |
| C415 | 4550007520 | S.TAN F931A106MAABMA | B | 53.1/26.5 |
| C416 | 4550007520 | S.TAN F931A106MAABMA | B | 53.1/31.4 |
| C417 | 4030017840 | S.CER C2012 CH 1H 222J-T | T | 58.0/24.3 |
| C450 | 4030011600 | S.CER C1608 JB 1E 104K-T | T | 43.1/35.3 |
| C451 | 4030011600 | S.CER C1608 JB 1E 104K-T | T | 43.6/42.9 |
| C452 | 4030006860 | S.CER C1608 JB 1H 102K-T | T | 40.8/39.6 |
| C501 | 4030011600 | S.CER C1608 JB 1E 104K-T | T | 74.8/24.0 |
| C502 | 4550007500 | S.TAN F931D106MBABMA | B | 77.5/33.2 |
| Eqv. | 4550006470 | S.TAN TEESVB2 1D 106M8R | | |
| C503 | 4030011600 | S.CER C1608 JB 1E 104K-T | T | 71.7/23.5 |
| C504 | 4550007500 | S.TAN F931D106MBABMA | B | 67.9/29.2 |
| Eqv. | 4550006470 | S.TAN TEESVB2 1D 106M8R | | |
| C506 | 4030007090 | S.CER C1608 CH 1H 470J-T | T | 67.2/28.4 |
| C507 | 4030007090 | S.CER C1608 CH 1H 470J-T | T | 76.2/27.4 |
| C551 | 4550007520 | S.TAN F931A106MAABMA | B | 50.3/8.7 |
| C552 | 4030011600 | S.CER C1608 JB 1E 104K-T | T | 49.5/5.5 |
| C553 | 4550007520 | S.TAN F931A106MAABMA | B | 55.1/13.3 |
| C554 | 4030011600 | S.CER C1608 JB 1E 104K-T | T | 60.1/7.7 |
| C555 | 4030011600 | S.CER C1608 JB 1E 104K-T | T | 59.9/4.7 |
| C556 | 4550007480 | S.TAN F930J106MAABMA | B | 53.6/7.1 |
| C557 | 4030011600 | S.CER C1608 JB 1E 104K-T | T | 60.7/2.8 |
| C558 | 4550007520 | S.TAN F931A106MAABMA | B | 53.6/4.3 |
| C601 | 4550007480 | S.TAN F930J106MAABMA | B | 61.4/17.3 |
| C602 | 4030018510 | S.CER C2012 CH 1H 682J-T | T | 58.8/16.5 |
| C603 | 4550007500 | S.TAN F931D106MBABMA | B | 68.3/15.0 |
| Eqv. | 4550006470 | S.TAN TEESVB2 1D 106M8R | | |
| C604 | 4030011600 | S.CER C1608 JB 1E 104K-T | T | 58.2/14.3 |
| C605 | 4030011600 | S.CER C1608 JB 1E 104K-T | T | 64.6/14.0 |
| C606 | 4550007500 | S.TAN F931D106MBABMA | B | 69.3/19.2 |
| Eqv. | 4550006470 | S.TAN TEESVB2 1D 106M8R | | |
| C607 | 4030018510 | S.CER C2012 CH 1H 682J-T | T | 67.0/22.6 |
| C608 | 4030007050 | S.CER C1608 CH 1H 220J-T | T | 68.3/16.8 |
| C651 | 4550007480 | S.TAN F930J106MAABMA | B | 60.1/9.2 |
| C652 | 4030018510 | S.CER C2012 CH 1H 682J-T | T | 62.0/6.6 |
| C653 | 4550007500 | S.TAN F931D106MBABMA | B | 60.0/2.6 |
| Eqv. | 4550006470 | S.TAN TEESVB2 1D 106M8R | | |
| C654 | 4030011600 | S.CER C1608 JB 1E 104K-T | T | 64.1/2.6 |
| C655 | 4030011600 | S.CER C1608 JB 1E 104K-T | T | 67.8/2.6 |
| C656 | 4550007500 | S.TAN F931D106MBABMA | B | 60.0/6.0 |
| Eqv. | 4550006470 | S.TAN TEESVB2 1D 106M8R | | |
| C657 | 4030018510 | S.CER C2012 CH 1H 682J-T | T | 68.3/12.2 |
| C658 | 4030007050 | S.CER C1608 CH 1H 220J-T | T | 71.4/7.0 |
| C701 | 4030017840 | S.CER C2012 CH 1H 222J-T | T | 74.4/21.2 |
| C702 | 4030017840 | S.CER C2012 CH 1H 222J-T | T | 79.0/13.4 |
| C703 | 4550007500 | S.TAN F931D106MBABMA | B | 75.4/15.8 |
| Eqv. | 4550006470 | S.TAN TEESVB2 1D 106M8R | | |
| C704 | 4030011600 | S.CER C1608 JB 1E 104K-T | T | 76.0/12.9 |
| C705 | 4030011600 | S.CER C1608 JB 1E 104K-T | T | 79.5/20.7 |
| C706 | 4550007500 | S.TAN F931D106MBABMA | B | 75.7/21.1 |
| Eqv. | 4550006470 | S.TAN TEESVB2 1D 106M8R | | |
| C707 | 4030007050 | S.CER C1608 CH 1H 220J-T | T | 78.8/18.1 |

## [DSP-A UNIT]

| REF NO. | PARTS NO. | DESCRIPTION | M. | H/V LOCATION |
|---|---|---|---|---|
| C771 | 4550007480 | S.TAN F930J106MAABMA | B | 49.8/14.1 |
| C772 | 4030011600 | S.CER C1608 JB 1E 104K-T | T | 49.5/15.0 |
| C773 | 4550007480 | S.TAN F930J106MAABMA | B | 55.1/18.1 |
| C801 | 4030011600 | S.CER C1608 JB 1E 104K-T | T | 77.5/24.1 |
| C921 | 4550007510 | S.TAN F931C106MBABMA | B | 66.5/2.7 |
| C922 | 4030011600 | S.CER C1608 JB 1E 104K-T | T | 71.1/3.6 |
| C923 | 4550002830 | S.TAN TEESVD2 1V 685M12R | B | 78.3/6.5 |
| C924 | 4030011600 | S.CER C1608 JB 1E 104K-T | T | 80.1/8.7 |
| C925 | 4550007510 | S.TAN F931C106MBABMA | B | 67.2/10.6 |
| C926 | 4030011600 | S.CER C1608 JB 1E 104K-T | T | 71.9/12.8 |
| C927 | 4550002830 | S.TAN TEESVD2 1V 685M12R | B | 72.7/6.5 |
| C928 | 4030011600 | S.CER C1608 JB 1E 104K-T | T | 79.7/5.3 |
| C961 | 4030011600 | S.CER C1608 JB 1E 104K-T | B | 11.3/15.7 |
| C962 | 4550007520 | S.TAN F931A106MAABMA | B | 12.0/18.9 |
| C963 | 4030011600 | S.CER C1608 JB 1E 104K-T | B | 10.7/25.5 |
| C964 | 4550007520 | S.TAN F931A106MAABMA | B | 11.5/29.5 |
| J921 | 6910013900 | CON IMSA-9180S-22A | | |
| J961 | 6910012460 | CON IMSA-9180S-30A | | |

Eqv.= This component is equivalent to the REF No. component listed above, and may be substituted on parts orders and repairs.

M.=Mounted side (T: Mounted on the Top side, B: Mounted on the Bottom side)
S.=Surface mount

## [DSP-B UNIT]

| REF NO. | PARTS NO. | DESCRIPTION | | M. | H/V LOCATION |
|---|---|---|---|---|---|
| IC1 | 1140012211 | S.IC | TMS320C6713BZDP225 <FE> | T | 28.1/20.5 |
| IC151 | 1130008361 | S.IC | TC7SHU04FU(TE85LJF) | B | 45.6/8.1 |
| IC171 | 1130008041 | S.IC | TC7SH04FU(TE85LJF) | T | 41.4/4.7 |
| IC181 | 1130011151 | S.IC | SN74AHC2G08HDCT3 | T | 30.2/2.0 |
| IC191 | 1130011151 | S.IC | SN74AHC2G08HDCT3 | T | 24.0/3.6 |
| IC201 | 1130013493 | S.IC | AT29LV040A-15TU(SX-2590E-12) | B | 29.0/42.0 |
| IC203 | 1110006411 | S.IC | R3111N111A-TR-F | T | 30.1/36.5 |
| IC301 | 1110006100 | S.IC | NJM5534MD-TE1-#ZZZB | T | 72.4/44.8 |
| IC331 | 1130009981 | S.IC | TC7W53FK(TE85LF) | T | 76.9/34.1 |
| IC341 | 1110006100 | S.IC | NJM5534MD-TE1-#ZZZB | T | 70.3/35.6 |
| IC371 | 1110006100 | S.IC | NJM5534MD-TE1-#ZZZB | T | 59.5/44.4 |
| IC401 | 1110006111 | S.IC | AK5394AVSP/P | T | 54.3/31.0 |
| IC451 | 1130006891 | S.IC | TC7S04FU(TE85RF) | T | 43.5/41.0 |
| IC452 | 1130012160 | S.IC | SN74LVC1GU04DCKR | T | 42.8/38.5 |
| IC501 | 1110001901 | S.IC | UPC4570G2-E1-A | T | 71.7/27.5 |
| IC551 | 1130013090 | S.IC | AK4396VFP-E2/P | T | 54.7/7.4 |
| IC601 | 1110006100 | S.IC | NJM5534MD-TE1-#ZZZB | T | 63.7/17.4 |
| IC651 | 1110006100 | S.IC | NJM5534MD-TE1-#ZZZB | T | 66.8/7.3 |
| IC701 | 1110006100 | S.IC | NJM5534MD-TE1-#ZZZB | T | 74.2/17.5 |
| IC771 | 1110004770 | S.IC | BU9480F-E2 | T | 51.7/18.5 |
| Q1 | 1590000680 | S.TRA | DTC114EUA T106 | T | 45.8/16.6 |
| D501 | 1730002321 | S.ZEN | MAZ8051GML | B | 76.5/29.6 |
| FI101 | 2040000790 | S.LC | EXCCET103U | T | 36.5/2.9 |
| X151 | 6050011660 | S.XTA | CR-754 SMD-49 30.000 MHz <KDS> | B | 40.6/2.9 |
| L1 | 6200003950 | S.COI | HF50ACC 322513-T | B | 43.3/34.8 |
| L2 | 6180003501 | S.COI | SLF6028T-100M1R3-PF | B | 13.7/35.8 |
| L3 | 6200003640 | S.COI | MLF1608E 100K-T | B | 12.3/8.2 |
| L401 | 6200003950 | S.COI | HF50ACC 322513-T | T | 49.3/42.9 |
| L921 | 6200003950 | S.COI | HF50ACC 322513-T | T | 73.7/4.4 |
| L922 | 6200003950 | S.COI | HF50ACC 322513-T | T | 78.0/9.5 |
| L924 | 6200003950 | S.COI | HF50ACC 322513-T | T | 74.2/9.6 |
| L925 | 6200003950 | S.COI | HF50ACC 322513-T | T | 77.5/4.4 |
| L961 | 6200003950 | S.COI | HF50ACC 322513-T | B | 11.3/12.2 |
| L962 | 6200003950 | S.COI | HF50ACC 322513-T | B | 12.9/24.6 |
| R1 | 7030003560 | S.RES | ERJ3GEYJ 103 V (10K) | B | 42.6/22.4 |
| R2 | 7030003560 | S.RES | ERJ3GEYJ 103 V (10K) | B | 41.8/24.2 |
| R3 | 7030003560 | S.RES | ERJ3GEYJ 103 V (10K) | B | 42.6/21.1 |
| R4 | 7030003560 | S.RES | ERJ3GEYJ 103 V (10K) | B | 41.8/13.7 |
| R5 | 7030003440 | S.RES | ERJ3GEYJ 102 V (1K) | B | 23.2/6.0 |
| R6 | 7030003440 | S.RES | ERJ3GEYJ 102 V (1K) | B | 21.9/6.0 |
| R7 | 7030003640 | S.RES | ERJ3GEYJ 473 V (47K) | B | 20.1/6.8 |
| R8 | 7030003440 | S.RES | ERJ3GEYJ 102 V (1K) | B | 14.2/8.2 |
| R9 | 7030003640 | S.RES | ERJ3GEYJ 473 V (47K) | B | 14.5/11.7 |
| R10 | 7030003640 | S.RES | ERJ3GEYJ 473 V (47K) | T | 43.8/13.1 |
| R11 | 7030003460 | S.RES | ERJ3GEYJ 152 V (1.5K) | B | 48.2/9.7 |
| R12 | 7030003560 | S.RES | ERJ3GEYJ 103 V (10K) | B | 26.8/13.4 |
| R151 | 7030003320 | S.RES | ERJ3GEYJ 101 V (100) | T | 44.4/5.4 |
| R152 | 7030003800 | S.RES | ERJ3GEYJ 105 V (1M) | B | 43.5/6.2 |
| R171 | 7030003320 | S.RES | ERJ3GEYJ 101 V (100) | T | 41.3/1.4 |
| R181 | 7030003560 | S.RES | ERJ3GEYJ 103 V (10K) | T | 9.2/7.1 |
| R182 | 7030003560 | S.RES | ERJ3GEYJ 103 V (10K) | T | 6.4/7.1 |
| R183 | 7030003560 | S.RES | ERJ3GEYJ 103 V (10K) | T | 11.9/8.4 |
| R184 | 7030003560 | S.RES | ERJ3GEYJ 103 V (10K) | T | 11.9/7.1 |
| R201 | 7030003860 | S.RES | ERJ3GE JPW V | T | 30.9/39.2 |
| R301 | 7030003860 | S.RES | ERJ3GE JPW V | T | 79.6/38.5 |
| R302 | 7030009591 | S.RES | ERA3YED 472V (4.7K) | T | 77.6/46.9 |
| R303 | 7030009591 | S.RES | ERA3YED 472V (4.7K) | T | 75.8/46.2 |
| R304 | 7030003320 | S.RES | ERJ3GEYJ 101 V (100) | T | 78.2/40.8 |
| R305 | 7030003860 | S.RES | ERJ3GE JPW V | T | 75.8/43.6 |
| R306 | 7030003320 | S.RES | ERJ3GEYJ 101 V (100) | T | 69.0/46.2 |
| R331 | 7030003500 | S.RES | ERJ3GEYJ 332 V (3.3K) | T | 64.4/40.0 |
| R332 | 7030003480 | S.RES | ERJ3GEYJ 222 V (2.2K) | T | 65.7/40.0 |
| R333 | 7030003640 | S.RES | ERJ3GEYJ 473 V (47K) | T | 75.0/33.2 |
| R341 | 7030003320 | S.RES | ERJ3GEYJ 101 V (100) | T | 73.7/34.9 |
| R342 | 7030003320 | S.RES | ERJ3GEYJ 101 V (100) | T | 66.9/37.4 |
| R343 | 7030006601 | S.RES | ERA3YED 272V (2.7K) | T | 73.7/37.5 |
| R344 | 7030010390 | S.RES | ERA3YED 821V (820) | T | 65.6/33.7 |
| R345 | 7030009691 | S.RES | ERA3YED 101V (100) | T | 66.3/31.7 |
| R371 | 7030003320 | S.RES | ERJ3GEYJ 101 V (100) | T | 63.4/43.9 |
| R372 | 7030003320 | S.RES | ERJ3GEYJ 101 V (100) | T | 55.3/46.3 |
| R373 | 7030006601 | S.RES | ERA3YED 272V (2.7K) | T | 63.4/45.7 |
| R374 | 7030010390 | S.RES | ERA3YED 821V (820) | T | 54.7/41.9 |
| R375 | 7030009691 | S.RES | ERA3YED 101V (100) | T | 56.1/40.6 |
| R401 | 7030009591 | S.RES | ERA3YED 472V (4.7K) | T | 53.2/42.6 |
| R402 | 7030009591 | S.RES | ERA3YED 472V (4.7K) | T | 51.9/44.1 |
| R403 | 7030003640 | S.RES | ERJ3GEYJ 473 V (47K) | T | 54.2/38.7 |
| R404 | 7030003200 | S.RES | ERJ3GEYJ 100 V (10) | T | 50.1/40.0 |
| R405 | 7030003320 | S.RES | ERJ3GEYJ 101 V (100) | T | 51.1/38.2 |
| R406 | 7030003640 | S.RES | ERJ3GEYJ 473 V (47K) | T | 49.8/38.2 |
| R407 | 7030003460 | S.RES | ERJ3GEYJ 152 V (1.5K) | B | 46.9/36.1 |
| R409 | 7030003640 | S.RES | ERJ3GEYJ 473 V (47K) | T | 52.3/23.9 |
| R410 | 7030003640 | S.RES | ERJ3GEYJ 473 V (47K) | T | 47.3/23.9 |
| R411 | 7030003640 | S.RES | ERJ3GEYJ 473 V (47K) | T | 49.8/23.9 |
| R412 | 7030003520 | S.RES | ERJ3GEYJ 472 V (4.7K) | T | 56.1/22.3 |
| R413 | 7030003520 | S.RES | ERJ3GEYJ 472 V (4.7K) | T | 54.2/21.9 |
| R451 | 7030003800 | S.RES | ERJ3GEYJ 105 V (1M) | T | 42.6/36.6 |
| R501 | 7030006521 | S.RES | ERA3YED 561V (560) | T | 76.2/30.0 |
| R502 | 7030003360 | S.RES | ERJ3GEYJ 221 V (220) | T | 70.4/23.5 |
| R503 | 7030003380 | S.RES | ERJ3GEYJ 331 V (330) | T | 65.3/29.0 |
| R504 | 7030003680 | S.RES | ERJ3GEYJ 104 V (100K) | T | 65.3/27.7 |
| R551 | 7030003320 | S.RES | ERJ3GEYJ 101 V (100) | T | 49.5/8.7 |
| R559 | 7030003640 | S.RES | ERJ3GEYJ 473 V (47K) | T | 59.9/10.6 |

## [DSP-B UNIT]

| REF NO. | PARTS NO. | DESCRIPTION | | M. | H/V LOCATION |
|---|---|---|---|---|---|
| R601 | 7030006521 | S.RES | ERA3YED 561V (560) | T | 63.1/20.8 |
| R602 | 7030007661 | S.RES | ERA3YED 331V (330) | T | 64.1/22.1 |
| R603 | 7030007661 | S.RES | ERA3YED 331V (330) | T | 59.0/19.9 |
| R604 | 7030009961 | S.RES | ERA3YED 221V (220) | T | 68.8/21.0 |
| R605 | 7030007661 | S.RES | ERA3YED 331V (330) | T | 65.7/20.8 |
| R606 | 7030003320 | S.RES | ERJ3GEYJ 101 V (100) | T | 67.2/14.0 |
| R607 | 7030003320 | S.RES | ERJ3GEYJ 101 V (100) | T | 61.9/14.0 |
| R651 | 7030006521 | S.RES | ERA3YED 561V (560) | T | 64.4/10.7 |
| R652 | 7030007661 | S.RES | ERA3YED 331V (330) | T | 65.4/12.0 |
| R653 | 7030007661 | S.RES | ERA3YED 331V (330) | T | 62.2/10.2 |
| R654 | 7030009961 | S.RES | ERA3YED 221V (220) | T | 69.6/10.7 |
| R655 | 7030007661 | S.RES | ERA3YED 331V (330) | T | 67.0/10.7 |
| R658 | 7030003320 | S.RES | ERJ3GEYJ 101 V (100) | T | 67.8/3.9 |
| R659 | 7030003320 | S.RES | ERJ3GEYJ 101 V (100) | T | 64.1/3.9 |
| R701 | 7030010770 | S.RES | ERA3YED 681V (680) | T | 71.4/21.0 |
| R702 | 7030009861 | S.RES | ERA3YED 471V (470) | T | 74.8/22.7 |
| R703 | 7030010770 | S.RES | ERA3YED 681V (680) | T | 70.6/13.6 |
| R704 | 7030009861 | S.RES | ERA3YED 471V (470) | T | 77.3/13.4 |
| R705 | 7030009691 | S.RES | ERA3YED 101V (100) | T | 77.4/22.2 |
| R706 | 7030003320 | S.RES | ERJ3GEYJ 101 V (100) | T | 77.4/20.9 |
| R707 | 7030003320 | S.RES | ERJ3GEYJ 101 V (100) | T | 74.1/14.1 |
| R801 | 7030003650 | S.RES | ERJ3GEYJ 563 V (56K) | T | 78.0/27.2 |
| R802 | 7030003680 | S.RES | ERJ3GEYJ 104 V (100K) | T | 78.0/25.9 |
| R803 | 7030003480 | S.RES | ERJ3GEYJ 222 V (2.2K) | T | 78.8/24.1 |
| R804 | 7030003490 | S.RES | ERJ3GEYJ 272 V (2.7K) | T | 78.0/29.8 |
| R805 | 7030003340 | S.RES | ERJ3GEYJ 151 V (150) | T | 78.0/28.5 |
| R901 | 7030003860 | S.RES | ERJ3GE JPW V | T | 46.7/21.0 |
| R962 | 7030003320 | S.RES | ERJ3GEYJ 101 V (100) | T | 12.1/16.9 |
| R963 | 7030003320 | S.RES | ERJ3GEYJ 101 V (100) | T | 11.9/15.6 |
| R964 | 7030003320 | S.RES | ERJ3GEYJ 101 V (100) | T | 11.9/14.3 |
| R965 | 7030003320 | S.RES | ERJ3GEYJ 101 V (100) | T | 11.9/13.0 |
| R967 | 7030003320 | S.RES | ERJ3GEYJ 101 V (100) | T | 13.7/37.9 |
| R968 | 7030003320 | S.RES | ERJ3GEYJ 101 V (100) | T | 11.9/11.7 |
| R969 | 7030003320 | S.RES | ERJ3GEYJ 101 V (100) | T | 13.7/48.3 |
| R970 | 7030003320 | S.RES | ERJ3GEYJ 101 V (100) | T | 13.7/47.0 |
| R971 | 7030003320 | S.RES | ERJ3GEYJ 101 V (100) | T | 13.7/45.7 |
| R972 | 7030003320 | S.RES | ERJ3GEYJ 101 V (100) | T | 13.7/44.4 |
| R973 | 7030003320 | S.RES | ERJ3GEYJ 101 V (100) | T | 13.7/43.1 |
| R974 | 7030003320 | S.RES | ERJ3GEYJ 101 V (100) | T | 13.7/41.8 |
| R975 | 7030003320 | S.RES | ERJ3GEYJ 101 V (100) | T | 13.7/40.5 |
| R976 | 7030003320 | S.RES | ERJ3GEYJ 101 V (100) | T | 13.7/39.2 |
| C1 | 4030011600 | S.CER | C1608 JB 1E 104K-T | B | 15.3/30.6 |
| C2 | 4030011600 | S.CER | C1608 JB 1E 104K-T | B | 41.8/30.8 |
| C3 | 4030011600 | S.CER | C1608 JB 1E 104K-T | B | 18.1/32.9 |
| C4 | 4030011600 | S.CER | C1608 JB 1E 104K-T | B | 39.4/33.0 |
| C5 | 4030011600 | S.CER | C1608 JB 1E 104K-T | B | 23.1/26.4 |
| C6 | 4030011600 | S.CER | C1608 JB 1E 104K-T | B | 24.4/26.4 |
| C7 | 4030011600 | S.CER | C1608 JB 1E 104K-T | B | 28.7/26.4 |
| C8 | 4030011600 | S.CER | C1608 JB 1E 104K-T | B | 30.0/26.4 |
| C9 | 4030011600 | S.CER | C1608 JB 1E 104K-T | B | 33.9/26.4 |
| C10 | 4030011600 | S.CER | C1608 JB 1E 104K-T | B | 21.5/23.4 |
| C11 | 4030011600 | S.CER | C1608 JB 1E 104K-T | B | 36.0/23.8 |
| C12 | 4030011600 | S.CER | C1608 JB 1E 104K-T | T | 13.7/21.1 |
| C13 | 4030011600 | S.CER | C1608 JB 1E 104K-T | B | 22.3/20.2 |
| C14 | 4030011600 | S.CER | C1608 JB 1E 104K-T | B | 36.0/21.2 |
| C15 | 4030011600 | S.CER | C1608 JB 1E 104K-T | B | 22.3/18.9 |
| C16 | 4030011600 | S.CER | C1608 JB 1E 104K-T | B | 36.0/18.6 |
| C17 | 4030011600 | S.CER | C1608 JB 1E 104K-T | T | 43.6/20.1 |
| C18 | 4030011600 | S.CER | C1608 JB 1E 104K-T | B | 22.3/15.2 |
| C19 | 4030011600 | S.CER | C1608 JB 1E 104K-T | B | 34.7/14.5 |
| C20 | 4030011600 | S.CER | C1608 JB 1E 104K-T | B | 23.2/13.4 |
| C21 | 4030011600 | S.CER | C1608 JB 1E 104K-T | B | 24.5/13.4 |
| C22 | 4030011600 | S.CER | C1608 JB 1E 104K-T | B | 28.1/13.4 |
| C23 | 4030011600 | S.CER | C1608 JB 1E 104K-T | B | 32.6/12.6 |
| C24 | 4030011600 | S.CER | C1608 JB 1E 104K-T | B | 35.3/12.6 |
| C25 | 4030011600 | S.CER | C1608 JB 1E 104K-T | B | 17.3/6.8 |
| C26 | 4030011600 | S.CER | C1608 JB 1E 104K-T | B | 33.1/6.8 |
| C27 | 4030011600 | S.CER | C1608 JB 1E 104K-T | B | 41.8/11.1 |
| C28 | 4030011600 | S.CER | C1608 JB 1E 104K-T | B | 15.5/8.2 |
| C29 | 4030011600 | S.CER | C1608 JB 1E 104K-T | B | 40.9/6.8 |
| C30 | 4030011600 | S.CER | C1608 JB 1E 104K-T | T | 35.2/5.0 |
| C31 | 4030011600 | S.CER | C1608 JB 1E 104K-T | T | 28.5/5.3 |
| C32 | 4030011600 | S.CER | C1608 JB 1E 104K-T | T | 37.8/5.0 |
| C33 | 4030011600 | S.CER | C1608 JB 1E 104K-T | T | 18.5/35.2 |
| C34 | 4030011600 | S.CER | C1608 JB 1E 104K-T | T | 36.5/35.0 |
| C35 | 4030011600 | S.CER | C1608 JB 1E 104K-T | B | 26.1/32.9 |
| C36 | 4030011600 | S.CER | C1608 JB 1E 104K-T | B | 29.4/32.9 |
| C37 | 4030011600 | S.CER | C1608 JB 1E 104K-T | B | 36.8/33.0 |
| C38 | 4030011600 | S.CER | C1608 JB 1E 104K-T | B | 15.3/28.0 |
| C39 | 4030011600 | S.CER | C1608 JB 1E 104K-T | B | 22.4/32.9 |
| C40 | 4030011600 | S.CER | C1608 JB 1E 104K-T | B | 26.1/26.4 |
| C41 | 4030011600 | S.CER | C1608 JB 1E 104K-T | B | 21.8/26.4 |
| C42 | 4030011600 | S.CER | C1608 JB 1E 104K-T | B | 27.4/26.4 |
| C43 | 4030011600 | S.CER | C1608 JB 1E 104K-T | B | 32.6/26.4 |
| C44 | 4030011600 | S.CER | C1608 JB 1E 104K-T | B | 35.2/26.4 |
| C45 | 4030011600 | S.CER | C1608 JB 1E 104K-T | B | 41.8/26.8 |
| C46 | 4030011600 | S.CER | C1608 JB 1E 104K-T | B | 15.4/25.0 |
| C47 | 4030011600 | S.CER | C1608 JB 1E 104K-T | T | 43.6/29.1 |
| C48 | 4030011600 | S.CER | C1608 JB 1E 104K-T | B | 22.3/21.5 |
| C49 | 4030011600 | S.CER | C1608 JB 1E 104K-T | B | 41.8/18.0 |
| C50 | 4030011600 | S.CER | C1608 JB 1E 104K-T | B | 22.3/17.6 |
| C51 | 4030011600 | S.CER | C1608 JB 1E 104K-T | B | 36.0/16.0 |
| C52 | 4030011600 | S.CER | C1608 JB 1E 104K-T | B | 15.8/11.7 |
| C53 | 4030011600 | S.CER | C1608 JB 1E 104K-T | B | 21.9/13.4 |
| C54 | 4030011600 | S.CER | C1608 JB 1E 104K-T | T | 43.0/10.0 |
| C55 | 4030011600 | S.CER | C1608 JB 1E 104K-T | B | 29.4/13.4 |
| C56 | 4030011600 | S.CER | C1608 JB 1E 104K-T | B | 25.1/6.8 |
| C57 | 4030011600 | S.CER | C1608 JB 1E 104K-T | B | 29.8/6.8 |
| C58 | 4030011600 | S.CER | C1608 JB 1E 104K-T | B | 38.3/6.8 |
| C59 | 4030011600 | S.CER | C1608 JB 1E 104K-T | T | 20.3/5.3 |
| C60 | 4510007130 | S.ELE | EEFCD 0J 470R | T | 19.7/44.0 |
| C61 | 4550007480 | S.TAN | F930J106MAABMA | B | 44.9/29.7 |
| C62 | 4510007130 | S.ELE | EEFCD 0J 470R | T | 25.8/44.0 |

Eqv.= This component is equivalent to the REF No. component listed above, and may be substituted on parts orders and repairs.

M.=Mounted side (T: Mounted on the Top side, B: Mounted on the Bottom side)
S.=Surface mount

## [DSP-B UNIT]

| REF NO. | PARTS NO. | DESCRIPTION | M. | H/V LOCATION |
|---|---|---|---|---|
| C101 | 4030011600 | S.CER C1608 JB 1E 104K-T | B | 35.7/6.8 |
| C102 | 4550007480 | S.TAN F930J106MAABMA | B | 30.7/2.7 |
| C151 | 4030011600 | S.CER C1608 JB 1E 104K-T | B | 45.6/10.0 |
| C152 | 4030007030 | S.CER C1608 CH 1H 150J-T | B | 46.1/6.2 |
| C153 | 4030007030 | S.CER C1608 CH 1H 150J-T | B | 43.1/8.1 |
| C171 | 4030011600 | S.CER C1608 JB 1E 104K-T | T | 41.3/2.8 |
| C181 | 4030011600 | S.CER C1608 JB 1E 104K-T | T | 31.1/4.3 |
| C191 | 4030011600 | S.CER C1608 JB 1E 104K-T | T | 22.6/1.2 |
| C201 | 4030011600 | S.CER C1608 JB 1E 104K-T | B | 41.4/43.3 |
| C301 | 4340000250 | S.MYL ECHU 1C 104JX5 | T | 77.9/44.1 |
| C302 | 4550007500 | S.TAN F931D106MBABMA | B | 76.5/43.8 |
| Eqv. | 4550006470 | S.TAN TEESVB2 1D 106M8R | | |
| C303 | 4030011600 | S.CER C1608 JB 1E 104K-T | T | 75.7/40.9 |
| C304 | 4550007500 | S.TAN F931D106MBABMA | B | 71.7/43.8 |
| Eqv. | 4550006470 | S.TAN TEESVB2 1D 106M8R | | |
| C305 | 4030011600 | S.CER C1608 JB 1E 104K-T | T | 67.7/46.2 |
| C306 | 4030007050 | S.CER C1608 CH 1H 220J-T | T | 72.5/40.2 |
| C331 | 4030011600 | S.CER C1608 JB 1E 104K-T | T | 78.8/32.9 |
| C332 | 4550007520 | S.TAN F931A106MAABMA | B | 67.9/35.3 |
| C333 | 4030011600 | S.CER C1608 JB 1E 104K-T | T | 79.6/35.9 |
| C341 | 4550007500 | S.TAN F931D106MBABMA | B | 73.2/32.5 |
| Eqv. | 4550006470 | S.TAN TEESVB2 1D 106M8R | | |
| C342 | 4030011600 | S.CER C1608 JB 1E 104K-T | T | 73.7/31.7 |
| C343 | 4550007500 | S.TAN F931D106MBABMA | B | 73.3/38.2 |
| Eqv. | 4550006470 | S.TAN TEESVB2 1D 106M8R | | |
| C344 | 4030011600 | S.CER C1608 JB 1E 104K-T | T | 65.6/37.4 |
| C345 | 4340000250 | S.MYL ECHU 1C 104JX5 | T | 76.8/38.1 |
| C346 | 4030018580 | S.CER C1608 CH 1H 821J-T | T | 66.9/33.7 |
| C347 | 4030011600 | S.CER C1608 JB 1E 104K-T | T | 66.2/35.5 |
| C348 | 4030007050 | S.CER C1608 CH 1H 220J-T | T | 70.9/30.9 |
| C371 | 4550007500 | S.TAN F931D106MBABMA | B | 59.8/43.9 |
| Eqv. | 4550006470 | S.TAN TEESVB2 1D 106M8R | | |
| C372 | 4030011600 | S.CER C1608 JB 1E 104K-T | T | 63.4/42.6 |
| C373 | 4550007500 | S.TAN F931D106MBABMA | B | 50.2/43.9 |
| Eqv. | 4550006470 | S.TAN TEESVB2 1D 106M8R | | |
| C374 | 4030011600 | S.CER C1608 JB 1E 104K-T | T | 53.5/45.6 |
| C375 | 4340000250 | S.MYL ECHU 1C 104JX5 | T | 68.1/42.6 |
| C376 | 4030018580 | S.CER C1608 CH 1H 821J-T | T | 56.1/43.2 |
| C377 | 4030011600 | S.CER C1608 JB 1E 104K-T | T | 55.3/45.0 |
| C378 | 4030007050 | S.CER C1608 CH 1H 220J-T | T | 59.5/39.6 |
| C401 | 4550007520 | S.TAN F931A106MAABMA | B | 55.0/43.8 |
| C402 | 4030017840 | S.CER C2012 CH 1H 222J-T | T | 58.2/37.7 |
| C403 | 4550007480 | S.TAN F930J106MAABMA | B | 63.1/35.3 |
| C404 | 4030011810 | S.CER C1608 JB 1A 224K-T | T | 61.6/37.5 |
| C405 | 4550007480 | S.TAN F930J106MAABMA | B | 58.3/35.3 |
| C406 | 4030011810 | S.CER C1608 JB 1A 224K-T | T | 63.5/36.7 |
| C407 | 4550007480 | S.TAN F930J106MAABMA | B | 50.5/36.2 |
| C408 | 4030011600 | S.CER C1608 JB 1E 104K-T | T | 54.2/37.4 |
| C409 | 4030011600 | S.CER C1608 JB 1E 104K-T | T | 54.2/23.2 |
| C410 | 4030009000 | S.CER C2012 JB 1C 224K-T | T | 62.2/24.3 |
| C411 | 4550007480 | S.TAN F930J106MAABMA | B | 63.1/28.5 |
| C412 | 4550007480 | S.TAN F930J106MAABMA | B | 58.3/29.2 |
| C413 | 4030009000 | S.CER C2012 JB 1C 224K-T | T | 59.0/22.5 |
| C414 | 4030011600 | S.CER C1608 JB 1E 104K-T | T | 54.2/24.5 |
| C415 | 4550007520 | S.TAN F931A106MAABMA | B | 53.1/26.5 |
| C416 | 4550007520 | S.TAN F931A106MAABMA | B | 53.1/31.4 |
| C417 | 4030017840 | S.CER C2012 CH 1H 222J-T | T | 58.0/24.3 |
| C450 | 4030011600 | S.CER C1608 JB 1E 104K-T | T | 43.1/35.3 |
| C451 | 4030011600 | S.CER C1608 JB 1E 104K-T | T | 43.6/42.9 |
| C452 | 4030006860 | S.CER C1608 JB 1H 102K-T | T | 40.8/39.6 |
| C501 | 4030011600 | S.CER C1608 JB 1E 104K-T | T | 74.8/24.0 |
| C502 | 4550007500 | S.TAN F931D106MBABMA | B | 77.5/33.2 |
| Eqv. | 4550006470 | S.TAN TEESVB2 1D 106M8R | | |
| C503 | 4030011600 | S.CER C1608 JB 1E 104K-T | T | 71.7/23.5 |
| C504 | 4550007500 | S.TAN F931D106MBABMA | B | 67.9/29.2 |
| Eqv. | 4550006470 | S.TAN TEESVB2 1D 106M8R | | |
| C506 | 4030007090 | S.CER C1608 CH 1H 470J-T | T | 67.2/28.4 |
| C507 | 4030007090 | S.CER C1608 CH 1H 470J-T | T | 76.2/27.4 |
| C551 | 4550007520 | S.TAN F931A106MAABMA | B | 50.3/8.7 |
| C552 | 4030011600 | S.CER C1608 JB 1E 104K-T | T | 49.5/5.5 |
| C553 | 4550007520 | S.TAN F931A106MAABMA | B | 55.1/13.3 |
| C554 | 4030011600 | S.CER C1608 JB 1E 104K-T | T | 60.1/7.7 |
| C555 | 4030011600 | S.CER C1608 JB 1E 104K-T | T | 59.9/4.7 |
| C556 | 4550007480 | S.TAN F930J106MAABMA | B | 53.6/7.1 |
| C557 | 4030011600 | S.CER C1608 JB 1E 104K-T | T | 60.7/2.8 |
| C558 | 4550007520 | S.TAN F931A106MAABMA | B | 53.6/4.3 |
| C601 | 4550007480 | S.TAN F930J106MAABMA | B | 61.4/17.3 |
| C602 | 4030018510 | S.CER C2012 CH 1H 682J-T | T | 58.8/16.5 |
| C603 | 4550007500 | S.TAN F931D106MBABMA | B | 68.3/15.0 |
| Eqv. | 4550006470 | S.TAN TEESVB2 1D 106M8R | | |
| C604 | 4030011600 | S.CER C1608 JB 1E 104K-T | T | 58.2/14.3 |
| C605 | 4030011600 | S.CER C1608 JB 1E 104K-T | T | 64.6/14.0 |
| C606 | 4550007500 | S.TAN F931D106MBABMA | B | 69.3/19.2 |
| Eqv. | 4550006470 | S.TAN TEESVB2 1D 106M8R | | |
| C607 | 4030018510 | S.CER C2012 CH 1H 682J-T | T | 67.0/22.6 |
| C608 | 4030007050 | S.CER C1608 CH 1H 220J-T | T | 68.3/16.8 |
| C651 | 4550007480 | S.TAN F930J106MAABMA | B | 60.1/9.2 |
| C652 | 4030018510 | S.CER C2012 CH 1H 682J-T | T | 62.0/6.6 |
| C653 | 4550007500 | S.TAN F931D106MBABMA | B | 60.0/2.6 |
| Eqv. | 4550006470 | S.TAN TEESVB2 1D 106M8R | | |
| C654 | 4030011600 | S.CER C1608 JB 1E 104K-T | T | 64.1/2.6 |
| C655 | 4030011600 | S.CER C1608 JB 1E 104K-T | T | 67.8/2.6 |
| C656 | 4550007500 | S.TAN F931D106MBABMA | B | 60.0/6.0 |
| Eqv. | 4550006470 | S.TAN TEESVB2 1D 106M8R | | |
| C657 | 4030018510 | S.CER C2012 CH 1H 682J-T | T | 68.3/12.2 |
| C658 | 4030007050 | S.CER C1608 CH 1H 220J-T | T | 71.4/7.0 |
| C701 | 4030017840 | S.CER C2012 CH 1H 222J-T | T | 74.4/21.2 |
| C702 | 4030017840 | S.CER C2012 CH 1H 222J-T | T | 79.0/13.4 |
| C703 | 4550007500 | S.TAN F931D106MBABMA | B | 75.4/15.8 |
| Eqv. | 4550006470 | S.TAN TEESVB2 1D 106M8R | | |
| C704 | 4030011600 | S.CER C1608 JB 1E 104K-T | T | 76.0/12.9 |
| C705 | 4030011600 | S.CER C1608 JB 1E 104K-T | T | 79.5/20.7 |
| C706 | 4550007500 | S.TAN F931D106MBABMA | B | 75.7/21.1 |
| Eqv. | 4550006470 | S.TAN TEESVB2 1D 106M8R | | |
| C707 | 4030007050 | S.CER C1608 CH 1H 220J-T | T | 78.8/18.1 |

## [DSP-B UNIT]

| REF NO. | PARTS NO. | DESCRIPTION | M. | H/V LOCATION |
|---|---|---|---|---|
| C771 | 4550007480 | S.TAN F930J106MAABMA | B | 49.8/14.1 |
| C772 | 4030011600 | S.CER C1608 JB 1E 104K-T | T | 49.5/15.0 |
| C773 | 4550007480 | S.TAN F930J106MAABMA | B | 55.1/18.1 |
| C801 | 4030011600 | S.CER C1608 JB 1E 104K-T | T | 77.5/24.1 |
| C921 | 4550007510 | S.TAN F931C106MBABMA | B | 66.5/2.7 |
| C922 | 4030011600 | S.CER C1608 JB 1E 104K-T | T | 71.1/3.6 |
| C923 | 4550002830 | S.TAN TEESVD2 1V 685M12R | B | 78.3/6.5 |
| C924 | 4030011600 | S.CER C1608 JB 1E 104K-T | T | 80.1/8.7 |
| C925 | 4550007510 | S.TAN F931C106MBABMA | B | 67.2/10.6 |
| C926 | 4030011600 | S.CER C1608 JB 1E 104K-T | T | 71.9/12.8 |
| C927 | 4550002830 | S.TAN TEESVD2 1V 685M12R | B | 72.7/6.5 |
| C928 | 4030011600 | S.CER C1608 JB 1E 104K-T | T | 79.7/5.3 |
| C961 | 4030011600 | S.CER C1608 JB 1E 104K-T | B | 11.3/15.7 |
| C962 | 4550007520 | S.TAN F931A106MAABMA | B | 12.0/18.9 |
| C963 | 4030011600 | S.CER C1608 JB 1E 104K-T | B | 10.7/25.5 |
| C964 | 4550007520 | S.TAN F931A106MAABMA | B | 11.5/29.5 |
| J921 | 6910013900 | CON IMSA-9180S-22A | | |
| J961 | 6910012460 | CON IMSA-9180S-30A | | |

Eqv.= This component is equivalent to the REF No. component listed above, and may be substituted on parts orders and repairs.

M.=Mounted side (T: Mounted on the Top side, B: Mounted on the Bottom side)
S.=Surface mount

## [DSP-TX UNIT]

| REF NO. | PARTS NO. | DESCRIPTION | | M. | H/V LOCATION |
|---|---|---|---|---|---|
| IC1 | 1140012211 | S.IC | TMS320C6713BZDP225 <FE> | T | 28.1/20.5 |
| IC151 | 1130008361 | S.IC | TC7SHU04FU(TE85LJF) | B | 45.6/8.1 |
| IC171 | 1130008041 | S.IC | TC7SH04FU(TE85LJF) | T | 41.4/4.7 |
| IC181 | 1130011151 | S.IC | SN74AHC2G08HDCT3 | T | 30.2/2.0 |
| IC191 | 1130011151 | S.IC | SN74AHC2G08HDCT3 | T | 24.0/3.6 |
| IC201 | 1130012205 | S.IC | AT29LV040A-15TU(SX-2590F-4) | B | 29.4/42.0 |
| IC203 | 1110006411 | S.IC | R3111N111A-TR-F | T | 30.3/36.6 |
| IC301 | 1110006100 | S.IC | NJM5534MD-TE1-#ZZZB | T | 72.4/44.5 |
| IC341 | 1110006100 | S.IC | NJM5534MD-TE1-#ZZZB | T | 72.1/35.3 |
| IC371 | 1110006100 | S.IC | NJM5534MD-TE1-#ZZZB | T | 59.5/44.5 |
| IC401 | 1110006111 | S.IC | AK5394AVSP/P | T | 54.3/31.0 |
| IC451 | 1130006891 | S.IC | TC7S04FU(TE85RF) | T | 42.8/35.9 |
| IC452 | 1130012160 | S.IC | SN74LVC1GU04DCKR | T | 42.3/39.8 |
| IC551 | 1190002090 | S.IC | AD1854JRSZRL <FE> | T | 53.4/5.8 |
| IC601 | 1110006100 | S.IC | NJM5534MD-TE1-#ZZZB | T | 53.1/15.2 |
| IC651 | 1110006100 | S.IC | NJM5534MD-TE1-#ZZZB | T | 65.3/5.1 |
| IC701 | 1110006100 | S.IC | NJM5534MD-TE1-#ZZZB | T | 63.2/14.8 |
| IC801 | 1110006100 | S.IC | NJM5534MD-TE1-#ZZZB | T | 68.5/25.9 |
| IC831 | 1110006100 | S.IC | NJM5534MD-TE1-#ZZZB | T | 73.1/15.9 |
| IC871 | 1110006100 | S.IC | NJM5534MD-TE1-#ZZZB | T | 77.0/26.2 |
| FI101 | 2040000790 | S.LC | EXCCET103U | T | 36.5/2.2 |
| X151 | 6050011660 | S.XTA | CR-754 SMD-49 30.000 MHz <KDS> | B | 40.6/2.9 |
| L1 | 6200003950 | S.COI | HF50ACC 322513-T | B | 45.1/39.6 |
| L2 | 6180003501 | S.COI | SLF6028T-100M1R3-PF | B | 13.6/35.4 |
| L3 | 6200003640 | S.COI | MLF1608E 100K-T | B | 11.0/7.7 |
| L401 | 6200003950 | S.COI | HF50ACC 322513-T | T | 49.5/43.1 |
| L921 | 6200003950 | S.COI | HF50ACC 322513-T | T | 75.0/3.8 |
| L922 | 6200003950 | S.COI | HF50ACC 322513-T | T | 79.7/8.9 |
| L924 | 6200003950 | S.COI | HF50ACC 322513-T | T | 75.0/8.9 |
| L925 | 6200003950 | S.COI | HF50ACC 322513-T | T | 79.7/3.8 |
| L961 | 6200003950 | S.COI | HF50ACC 322513-T | B | 11.5/12.0 |
| L962 | 6200003950 | S.COI | HF50ACC 322513-T | B | 12.6/24.0 |
| R1 | 7030003560 | S.RES | ERJ3GEYJ 103 V (10K) | B | 43.0/22.2 |
| R2 | 7030003560 | S.RES | ERJ3GEYJ 103 V (10K) | B | 42.2/24.2 |
| R3 | 7030003560 | S.RES | ERJ3GEYJ 103 V (10K) | B | 43.0/20.9 |
| R4 | 7030003560 | S.RES | ERJ3GEYJ 103 V (10K) | B | 42.5/13.7 |
| R5 | 7030003440 | S.RES | ERJ3GEYJ 102 V (1K) | B | 23.2/5.5 |
| R6 | 7030003440 | S.RES | ERJ3GEYJ 102 V (1K) | B | 21.9/5.5 |
| R7 | 7030003640 | S.RES | ERJ3GEYJ 473 V (47K) | B | 20.6/5.5 |
| R8 | 7030003440 | S.RES | ERJ3GEYJ 102 V (1K) | B | 13.8/8.2 |
| R9 | 7030003640 | S.RES | ERJ3GEYJ 473 V (47K) | B | 13.8/11.6 |
| R10 | 7030003640 | S.RES | ERJ3GEYJ 473 V (47K) | T | 43.8/13.1 |
| R11 | 7030003460 | S.RES | ERJ3GEYJ 152 V (1.5K) | B | 41.8/8.5 |
| R12 | 7030003560 | S.RES | ERJ3GEYJ 103 V (10K) | B | 26.9/13.9 |
| R151 | 7030003320 | S.RES | ERJ3GEYJ 101 V (100) | T | 44.7/5.4 |
| R152 | 7030003800 | S.RES | ERJ3GEYJ 105 V (1M) | B | 43.5/6.2 |
| R171 | 7030003320 | S.RES | ERJ3GEYJ 101 V (100) | T | 41.3/1.4 |
| R181 | 7030003560 | S.RES | ERJ3GEYJ 103 V (10K) | T | 6.5/7.1 |
| R182 | 7030003560 | S.RES | ERJ3GEYJ 103 V (10K) | T | 9.2/7.1 |
| R183 | 7030003560 | S.RES | ERJ3GEYJ 103 V (10K) | T | 11.9/8.4 |
| R184 | 7030003560 | S.RES | ERJ3GEYJ 103 V (10K) | T | 11.9/7.1 |
| R201 | 7030003860 | S.RES | ERJ3GE JPW V | T | 30.9/39.3 |
| R301 | 7030003440 | S.RES | ERJ3GEYJ 102 V (1K) | T | 79.5/37.8 |
| R302 | 7030009591 | S.RES | ERA3YED 472V (4.7K) | T | 77.6/46.9 |
| R303 | 7030009591 | S.RES | ERA3YED 472V (4.7K) | T | 75.8/46.2 |
| R304 | 7030003320 | S.RES | ERJ3GEYJ 101 V (100) | T | 78.1/40.2 |
| R305 | 7030003440 | S.RES | ERJ3GEYJ 102 V (1K) | T | 75.8/43.6 |
| R306 | 7030003320 | S.RES | ERJ3GEYJ 101 V (100) | T | 69.0/46.2 |
| R341 | 7030003320 | S.RES | ERJ3GEYJ 101 V (100) | T | 76.3/34.7 |
| R342 | 7030003320 | S.RES | ERJ3GEYJ 101 V (100) | T | 68.5/38.4 |
| R343 | 7030005321 | S.RES | ERA3YED 103V (10K) | T | 64.5/34.7 |
| R344 | 7030009591 | S.RES | ERA3YED 472V (4.7K) | T | 67.0/33.9 |
| R345 | 7030009691 | S.RES | ERA3YED 101V (100) | T | 67.8/32.0 |
| R371 | 7030003320 | S.RES | ERJ3GEYJ 101 V (100) | B | 62.9/42.2 |
| R372 | 7030003320 | S.RES | ERJ3GEYJ 101 V (100) | T | 55.3/46.3 |
| R373 | 7030005321 | S.RES | ERA3YED 103V (10K) | T | 63.7/46.2 |
| R374 | 7030009591 | S.RES | ERA3YED 472V (4.7K) | T | 54.7/41.9 |
| R375 | 7030009691 | S.RES | ERA3YED 101V (100) | T | 56.1/40.6 |
| R401 | 7030009591 | S.RES | ERA3YED 472V (4.7K) | T | 53.2/42.6 |
| R402 | 7030009591 | S.RES | ERA3YED 472V (4.7K) | T | 51.7/44.1 |
| R403 | 7030003640 | S.RES | ERJ3GEYJ 473 V (47K) | T | 54.2/38.7 |
| R404 | 7030003200 | S.RES | ERJ3GEYJ 100 V (10) | T | 50.1/40.0 |
| R405 | 7030003320 | S.RES | ERJ3GEYJ 101 V (100) | T | 51.1/38.2 |
| R406 | 7030003640 | S.RES | ERJ3GEYJ 473 V (47K) | T | 49.8/38.2 |
| R407 | 7030003460 | S.RES | ERJ3GEYJ 152 V (1.5K) | B | 48.1/35.5 |
| R409 | 7030003640 | S.RES | ERJ3GEYJ 473 V (47K) | T | 52.0/23.9 |
| R410 | 7030003640 | S.RES | ERJ3GEYJ 473 V (47K) | T | 50.7/23.9 |
| R411 | 7030003640 | S.RES | ERJ3GEYJ 473 V (47K) | T | 49.1/23.9 |
| R412 | 7030003520 | S.RES | ERJ3GEYJ 472 V (4.7K) | T | 57.3/22.3 |
| R413 | 7030003520 | S.RES | ERJ3GEYJ 472 V (4.7K) | T | 57.3/21.0 |
| R414 | 7030003360 | S.RES | ERJ3GEYJ 221 V (220) | T | 46.1/38.2 |
| R451 | 7030003800 | S.RES | ERJ3GEYJ 105 V (1M) | T | 40.4/41.1 |
| R452 | 7030003440 | S.RES | ERJ3GEYJ 102 V (1K) | B | 45.9/35.5 |
| R551 | 7030003360 | S.RES | ERJ3GEYJ 221 V (220) | B | 54.0/9.3 |
| R601 | 7030006521 | S.RES | ERA3YED 561V (560) | T | 50.3/18.6 |
| R602 | 7030007661 | S.RES | ERA3YED 331V (330) | T | 50.3/19.9 |
| R603 | 7030007661 | S.RES | ERA3YED 331V (330) | T | 48.3/17.2 |
| R604 | 7030009961 | S.RES | ERA3YED 221V (220) | T | 55.5/18.6 |
| R605 | 7030007661 | S.RES | ERA3YED 331V (330) | T | 52.9/18.6 |
| R606 | 7030003320 | S.RES | ERJ3GEYJ 101 V (100) | B | 51.5/24.7 |
| R607 | 7030003320 | S.RES | ERJ3GEYJ 101 V (100) | B | 52.2/13.2 |
| R651 | 7030006521 | S.RES | ERA3YED 561V (560) | T | 62.6/8.5 |
| R652 | 7030007661 | S.RES | ERA3YED 331V (330) | T | 63.5/9.8 |
| R653 | 7030007661 | S.RES | ERA3YED 331V (330) | T | 60.4/8.3 |
| R654 | 7030009961 | S.RES | ERA3YED 221V (220) | T | 67.8/8.5 |
| R655 | 7030007661 | S.RES | ERA3YED 331V (330) | T | 65.2/8.5 |

## [DSP-TX UNIT]

| REF NO. | PARTS NO. | DESCRIPTION | | M. | H/V LOCATION |
|---|---|---|---|---|---|
| R656 | 7030003320 | S.RES | ERJ3GEYJ 101 V (100) | B | 67.3/8.3 |
| R657 | 7030003320 | S.RES | ERJ3GEYJ 101 V (100) | B | 65.1/2.8 |
| R701 | 7030010770 | S.RES | ERA3YED 681V (680) | T | 58.1/18.2 |
| R702 | 7030009861 | S.RES | ERA3YED 471V (470) | T | 62.1/20.1 |
| R703 | 7030010770 | S.RES | ERA3YED 681V (680) | T | 70.8/9.4 |
| R704 | 7030009861 | S.RES | ERA3YED 471V (470) | T | 55.7/11.8 |
| R705 | 7030009691 | S.RES | ERA3YED 101V (100) | T | 69.1/12.1 |
| R706 | 7030003320 | S.RES | ERJ3GEYJ 101 V (100) | B | 61.1/23.1 |
| R707 | 7030003320 | S.RES | ERJ3GEYJ 101 V (100) | B | 54.8/14.6 |
| R801 | 7030009591 | S.RES | ERA3YED 472V (4.7K) | T | 65.0/22.8 |
| R802 | 7030003320 | S.RES | ERJ3GEYJ 101 V (100) | T | 63.5/22.8 |
| R803 | 7030005321 | S.RES | ERA3YED 103V (10K) | T | 68.7/21.1 |
| R804 | 7030003320 | S.RES | ERJ3GEYJ 101 V (100) | B | 69.8/31.7 |
| R805 | 7030003320 | S.RES | ERJ3GEYJ 101 V (100) | B | 72.4/21.7 |
| R831 | 7030009591 | S.RES | ERA3YED 472V (4.7K) | T | 68.4/17.9 |
| R832 | 7030003320 | S.RES | ERJ3GEYJ 101 V (100) | T | 68.7/19.8 |
| R833 | 7030005321 | S.RES | ERA3YED 103V (10K) | T | 69.7/15.3 |
| R834 | 7030003320 | S.RES | ERJ3GEYJ 101 V (100) | B | 64.0/23.3 |
| R835 | 7030003320 | S.RES | ERJ3GEYJ 101 V (100) | B | 73.5/13.4 |
| R871 | 7030003520 | S.RES | ERJ3GEYJ 472 V (4.7K) | T | 77.8/13.8 |
| R872 | 7030003520 | S.RES | ERJ3GEYJ 472 V (4.7K) | T | 79.1/18.8 |
| R874 | 7030003320 | S.RES | ERJ3GEYJ 101 V (100) | B | 71.4/31.7 |
| R875 | 7030003320 | S.RES | ERJ3GEYJ 101 V (100) | B | 74.4/21.3 |
| R901 | 7030003860 | S.RES | ERJ3GE JPW V | T | 52.7/22.0 |
| R903 | 7030003860 | S.RES | ERJ3GE JPW V | B | 47.8/38.0 |
| R904 | 7030003860 | S.RES | ERJ3GE JPW V | T | 47.1/4.2 |
| R905 | 7030003860 | S.RES | ERJ3GE JPW V | B | 48.1/10.2 |
| R962 | 7030003320 | S.RES | ERJ3GEYJ 101 V (100) | T | 12.1/17.6 |
| R963 | 7030003320 | S.RES | ERJ3GEYJ 101 V (100) | T | 11.9/16.3 |
| R964 | 7030003320 | S.RES | ERJ3GEYJ 101 V (100) | T | 11.9/15.0 |
| R967 | 7030003320 | S.RES | ERJ3GEYJ 101 V (100) | T | 13.7/38.8 |
| R968 | 7030003320 | S.RES | ERJ3GEYJ 101 V (100) | T | 11.9/12.4 |
| R969 | 7030003320 | S.RES | ERJ3GEYJ 101 V (100) | T | 13.7/47.9 |
| R970 | 7030003320 | S.RES | ERJ3GEYJ 101 V (100) | T | 13.7/46.6 |
| R971 | 7030003320 | S.RES | ERJ3GEYJ 101 V (100) | T | 13.7/45.3 |
| R972 | 7030003320 | S.RES | ERJ3GEYJ 101 V (100) | T | 13.7/44.0 |
| R973 | 7030003320 | S.RES | ERJ3GEYJ 101 V (100) | T | 13.7/42.7 |
| R974 | 7030003320 | S.RES | ERJ3GEYJ 101 V (100) | T | 13.7/41.4 |
| R975 | 7030003320 | S.RES | ERJ3GEYJ 101 V (100) | T | 13.7/40.1 |
| R976 | 7030003320 | S.RES | ERJ3GEYJ 101 V (100) | T | 11.9/13.7 |
| C1 | 4030011600 | S.CER | C1608 JB 1E 104K-T | B | 15.3/30.5 |
| C2 | 4030011600 | S.CER | C1608 JB 1E 104K-T | B | 42.2/30.8 |
| C3 | 4030011600 | S.CER | C1608 JB 1E 104K-T | B | 18.1/32.9 |
| C4 | 4030011600 | S.CER | C1608 JB 1E 104K-T | B | 39.4/33.0 |
| C5 | 4030011600 | S.CER | C1608 JB 1E 104K-T | B | 23.3/25.9 |
| C6 | 4030011600 | S.CER | C1608 JB 1E 104K-T | B | 24.6/25.9 |
| C7 | 4030011600 | S.CER | C1608 JB 1E 104K-T | B | 28.7/25.9 |
| C8 | 4030011600 | S.CER | C1608 JB 1E 104K-T | B | 30.0/25.9 |
| C9 | 4030011600 | S.CER | C1608 JB 1E 104K-T | B | 33.9/25.9 |
| C10 | 4030011600 | S.CER | C1608 JB 1E 104K-T | B | 22.8/23.8 |
| C11 | 4030011600 | S.CER | C1608 JB 1E 104K-T | B | 35.5/23.3 |
| C12 | 4030011600 | S.CER | C1608 JB 1E 104K-T | T | 12.6/20.8 |
| C13 | 4030011600 | S.CER | C1608 JB 1E 104K-T | B | 22.8/20.2 |
| C14 | 4030011600 | S.CER | C1608 JB 1E 104K-T | B | 35.5/20.7 |
| C15 | 4030011600 | S.CER | C1608 JB 1E 104K-T | B | 22.8/18.9 |
| C16 | 4030011600 | S.CER | C1608 JB 1E 104K-T | B | 34.2/18.5 |
| C17 | 4030011600 | S.CER | C1608 JB 1E 104K-T | T | 43.6/20.1 |
| C18 | 4030011600 | S.CER | C1608 JB 1E 104K-T | B | 22.8/15.7 |
| C19 | 4030011600 | S.CER | C1608 JB 1E 104K-T | B | 34.2/15.0 |
| C20 | 4030011600 | S.CER | C1608 JB 1E 104K-T | B | 23.3/13.9 |
| C21 | 4030011600 | S.CER | C1608 JB 1E 104K-T | B | 24.6/13.9 |
| C22 | 4030011600 | S.CER | C1608 JB 1E 104K-T | B | 28.2/13.9 |
| C23 | 4030011600 | S.CER | C1608 JB 1E 104K-T | B | 32.6/13.1 |
| C24 | 4030011600 | S.CER | C1608 JB 1E 104K-T | B | 35.2/13.1 |
| C25 | 4030011600 | S.CER | C1608 JB 1E 104K-T | B | 17.3/6.8 |
| C26 | 4030011600 | S.CER | C1608 JB 1E 104K-T | B | 33.1/6.3 |
| C27 | 4030011600 | S.CER | C1608 JB 1E 104K-T | B | 42.5/11.1 |
| C28 | 4030011600 | S.CER | C1608 JB 1E 104K-T | B | 15.1/8.2 |
| C29 | 4030011600 | S.CER | C1608 JB 1E 104K-T | B | 40.9/6.6 |
| C30 | 4030011600 | S.CER | C1608 JB 1E 104K-T | T | 35.2/5.0 |
| C31 | 4030011600 | S.CER | C1608 JB 1E 104K-T | T | 28.5/5.3 |
| C32 | 4030011600 | S.CER | C1608 JB 1E 104K-T | T | 37.8/5.0 |
| C33 | 4030011600 | S.CER | C1608 JB 1E 104K-T | T | 18.6/35.6 |
| C34 | 4030011600 | S.CER | C1608 JB 1E 104K-T | T | 37.6/35.6 |
| C35 | 4030011600 | S.CER | C1608 JB 1E 104K-T | B | 26.1/32.9 |
| C36 | 4030011600 | S.CER | C1608 JB 1E 104K-T | B | 29.4/32.9 |
| C37 | 4030011600 | S.CER | C1608 JB 1E 104K-T | B | 36.8/33.0 |
| C38 | 4030011600 | S.CER | C1608 JB 1E 104K-T | B | 15.3/27.8 |
| C39 | 4030011600 | S.CER | C1608 JB 1E 104K-T | B | 22.4/32.9 |
| C40 | 4030011600 | S.CER | C1608 JB 1E 104K-T | B | 26.1/25.9 |
| C41 | 4030011600 | S.CER | C1608 JB 1E 104K-T | B | 22.0/25.9 |
| C42 | 4030011600 | S.CER | C1608 JB 1E 104K-T | B | 27.4/25.9 |
| C43 | 4030011600 | S.CER | C1608 JB 1E 104K-T | B | 32.6/25.9 |
| C44 | 4030011600 | S.CER | C1608 JB 1E 104K-T | B | 35.2/25.9 |
| C45 | 4030011600 | S.CER | C1608 JB 1E 104K-T | B | 42.2/26.8 |
| C46 | 4030011600 | S.CER | C1608 JB 1E 104K-T | B | 15.4/25.0 |
| C47 | 4030011600 | S.CER | C1608 JB 1E 104K-T | T | 43.6/29.1 |
| C48 | 4030011600 | S.CER | C1608 JB 1E 104K-T | B | 22.8/21.5 |
| C49 | 4030011600 | S.CER | C1608 JB 1E 104K-T | B | 42.5/18.0 |
| C50 | 4030011600 | S.CER | C1608 JB 1E 104K-T | B | 22.8/17.6 |
| C51 | 4030011600 | S.CER | C1608 JB 1E 104K-T | B | 35.5/17.6 |
| C52 | 4030011600 | S.CER | C1608 JB 1E 104K-T | B | 15.1/11.6 |
| C53 | 4030011600 | S.CER | C1608 JB 1E 104K-T | B | 22.0/13.9 |
| C54 | 4030011600 | S.CER | C1608 JB 1E 104K-T | T | 43.3/10.0 |
| C55 | 4030011600 | S.CER | C1608 JB 1E 104K-T | B | 29.5/13.9 |
| C56 | 4030011600 | S.CER | C1608 JB 1E 104K-T | B | 25.2/6.6 |
| C57 | 4030011600 | S.CER | C1608 JB 1E 104K-T | B | 29.8/6.3 |
| C58 | 4030011600 | S.CER | C1608 JB 1E 104K-T | B | 38.3/6.6 |
| C59 | 4030011600 | S.CER | C1608 JB 1E 104K-T | T | 20.3/5.3 |
| C60 | 4510007130 | S.ELE | EEFCD 0J 470R | T | 25.4/41.7 |
| C61 | 4550007480 | S.TAN | F930J106MAABMA | B | 45.3/29.7 |
| C62 | 4510007130 | S.ELE | EEFCD 0J 470R | T | 19.5/41.7 |
| C101 | 4030011600 | S.CER | C1608 JB 1E 104K-T | B | 35.7/6.6 |

Eqv.= This component is equivalent to the REF No. component listed above, and may be substituted on parts orders and repairs.

M.=Mounted side (T: Mounted on the Top side, B: Mounted on the Bottom side)
S.=Surface mount

## [DSP-TX UNIT]

| REF NO. | PARTS NO. | DESCRIPTION | M. | H/V LOCATION |
|---|---|---|---|---|
| C102 | 4550007480 | S.TAN F930J106MAABMA | B | 30.7/2.7 |
| C151 | 4030011600 | S.CER C1608 JB 1E 104K-T | B | 45.5/10.2 |
| C152 | 4030007030 | S.CER C1608 CH 1H 150J-T | B | 46.1/6.2 |
| C153 | 4030007030 | S.CER C1608 CH 1H 150J-T | B | 43.1/8.1 |
| C171 | 4030011600 | S.CER C1608 JB 1E 104K-T | T | 41.3/2.8 |
| C181 | 4030011600 | S.CER C1608 JB 1E 104K-T | T | 31.1/4.3 |
| C191 | 4030011600 | S.CER C1608 JB 1E 104K-T | T | 22.6/1.2 |
| C201 | 4030011600 | S.CER C1608 JB 1E 104K-T | B | 42.3/44.4 |
| C301 | 4550007660 | S.TAN F931E105MAABMA | B | 80.4/44.2 |
| Eqv. | 4550003220 | S.TAN TEESVA 1E 105M8R | | |
| C302 | 4550007500 | S.TAN F931D106MBABMA | B | 75.6/44.2 |
| Eqv. | 4550006470 | S.TAN TEESVB2 1D 106M8R | | |
| C303 | 4030011600 | S.CER C1608 JB 1E 104K-T | T | 75.8/40.7 |
| C304 | 4550007500 | S.TAN F931D106MBABMA | B | 71.5/44.2 |
| Eqv. | 4550006470 | S.TAN TEESVB2 1D 106M8R | | |
| C305 | 4030011600 | S.CER C1608 JB 1E 104K-T | T | 67.7/46.2 |
| C306 | 4030007050 | S.CER C1608 CH 1H 220J-T | T | 72.3/39.9 |
| C341 | 4550007500 | S.TAN F931D106MBABMA | B | 74.1/34.7 |
| Eqv. | 4550006470 | S.TAN TEESVB2 1D 106M8R | | |
| C342 | 4030011600 | S.CER C1608 JB 1E 104K-T | T | 75.5/32.8 |
| C343 | 4550007500 | S.TAN F931D106MBABMA | B | 66.9/36.9 |
| Eqv. | 4550006470 | S.TAN TEESVB2 1D 106M8R | | |
| C344 | 4030011600 | S.CER C1608 JB 1E 104K-T | T | 67.2/38.4 |
| C345 | 4550007660 | S.TAN F931E105MAABMA | B | 76.8/38.7 |
| Eqv. | 4550003220 | S.TAN TEESVA 1E 105M8R | | |
| C346 | 4030007140 | S.CER C1608 CH 1H 121J-T | T | 68.5/33.9 |
| C347 | 4030011600 | S.CER C1608 JB 1E 104K-T | T | 67.8/35.9 |
| C348 | 4030007050 | S.CER C1608 CH 1H 220J-T | T | 72.1/30.7 |
| C371 | 4550007500 | S.TAN F931D106MBABMA | B | 59.8/43.9 |
| Eqv. | 4550006470 | S.TAN TEESVB2 1D 106M8R | | |
| C372 | 4030011600 | S.CER C1608 JB 1E 104K-T | T | 63.7/43.0 |
| C373 | 4550007500 | S.TAN F931D106MBABMA | B | 50.2/43.9 |
| Eqv. | 4550006470 | S.TAN TEESVB2 1D 106M8R | | |
| C374 | 4030011600 | S.CER C1608 JB 1E 104K-T | T | 53.5/45.6 |
| C375 | 4550007660 | S.TAN F931E105MAABMA | B | 66.0/43.8 |
| Eqv. | 4550003220 | S.TAN TEESVA 1E 105M8R | | |
| C376 | 4030007140 | S.CER C1608 CH 1H 121J-T | T | 56.1/43.2 |
| C377 | 4030011600 | S.CER C1608 JB 1E 104K-T | T | 55.3/45.0 |
| C378 | 4030007050 | S.CER C1608 CH 1H 220J-T | T | 59.5/39.9 |
| C401 | 4550007480 | S.TAN F930J106MAABMA | B | 55.0/43.8 |
| C402 | 4030017840 | S.CER C2012 CH 1H 222J-T | T | 58.2/37.7 |
| C403 | 4550007480 | S.TAN F930J106MAABMA | B | 63.1/35.3 |
| C404 | 4030011810 | S.CER C1608 JB 1A 224K-T | T | 61.6/37.5 |
| C405 | 4550007480 | S.TAN F930J106MAABMA | B | 58.3/36.0 |
| C406 | 4030011810 | S.CER C1608 JB 1A 224K-T | T | 64.5/32.1 |
| C407 | 4550007480 | S.TAN F930J106MAABMA | B | 51.2/36.2 |
| C408 | 4030011600 | S.CER C1608 JB 1E 104K-T | T | 54.2/37.4 |
| C410 | 4030009000 | S.CER C2012 JB 1C 224K-T | T | 61.0/24.1 |
| C411 | 4550007480 | S.TAN F930J106MAABMA | B | 62.6/28.3 |
| C412 | 4550007480 | S.TAN F930J106MAABMA | B | 58.3/29.9 |
| C413 | 4030009000 | S.CER C2012 JB 1C 224K-T | T | 64.8/28.7 |
| C414 | 4030011600 | S.CER C1608 JB 1E 104K-T | T | 54.3/24.5 |
| C415 | 4550007520 | S.TAN F931A106MAABMA | B | 52.7/29.3 |
| C416 | 4550007480 | S.TAN F930J106MAABMA | B | 56.2/24.5 |
| C417 | 4030017840 | S.CER C2012 CH 1H 222J-T | T | 57.5/24.1 |
| C450 | 4030011600 | S.CER C1608 JB 1E 104K-T | T | 44.2/39.7 |
| C451 | 4030011600 | S.CER C1608 JB 1E 104K-T | T | 42.9/37.8 |
| C452 | 4030006860 | S.CER C1608 JB 1H 102K-T | T | 42.9/41.9 |
| C453 | 4030007050 | S.CER C1608 CH 1H 220J-T | B | 45.9/36.8 |
| C551 | 4030011600 | S.CER C1608 JB 1E 104K-T | T | 48.0/1.7 |
| C552 | 4550007520 | S.TAN F931A106MAABMA | B | 49.8/3.3 |
| C553 | 4550007520 | S.TAN F931A106MAABMA | B | 57.2/8.9 |
| C554 | 4550007520 | S.TAN F931A106MAABMA | B | 55.0/3.3 |
| C555 | 4030011600 | S.CER C1608 JB 1E 104K-T | T | 58.6/2.5 |
| C556 | 4030011600 | S.CER C1608 JB 1E 104K-T | T | 58.6/5.8 |
| C557 | 4030011600 | S.CER C1608 JB 1E 104K-T | B | 57.7/4.2 |
| C601 | 4550007660 | S.TAN F931E105MAABMA | B | 50.5/9.4 |
| Eqv. | 4550003220 | S.TAN TEESVA 1E 105M8R | | |
| C602 | 4030018510 | S.CER C2012 CH 1H 682J-T | T | 48.3/14.2 |
| C603 | 4550007500 | S.TAN F931D106MBABMA | B | 50.4/15.9 |
| Eqv. | 4550006470 | S.TAN TEESVB2 1D 106M8R | | |
| C604 | 4030011600 | S.CER C1608 JB 1E 104K-T | T | 49.7/11.8 |
| C605 | 4030011600 | S.CER C1608 JB 1E 104K-T | T | 52.8/11.8 |
| C606 | 4550007500 | S.TAN F931D106MBABMA | B | 51.1/20.9 |
| Eqv. | 4550006470 | S.TAN TEESVB2 1D 106M8R | | |
| C607 | 4030018510 | S.CER C2012 CH 1H 682J-T | T | 53.3/20.2 |
| C608 | 4030007050 | S.CER C1608 CH 1H 220J-T | T | 57.7/14.6 |
| C651 | 4550007660 | S.TAN F931E105MAABMA | B | 60.1/9.0 |
| Eqv. | 4550003220 | S.TAN TEESVA 1E 105M8R | | |
| C652 | 4030018510 | S.CER C2012 CH 1H 682J-T | T | 60.2/5.3 |
| C653 | 4550007500 | S.TAN F931D106MBABMA | B | 62.6/3.3 |
| Eqv. | 4550006470 | S.TAN TEESVB2 1D 106M8R | | |
| C654 | 4030011600 | S.CER C1608 JB 1E 104K-T | T | 62.5/1.7 |
| C655 | 4030011600 | S.CER C1608 JB 1E 104K-T | T | 69.8/1.7 |
| C656 | 4550007500 | S.TAN F931D106MBABMA | B | 63.6/9.2 |
| Eqv. | 4550006470 | S.TAN TEESVB2 1D 106M8R | | |
| C657 | 4030018510 | S.CER C2012 CH 1H 682J-T | T | 66.5/10.0 |
| C658 | 4030007050 | S.CER C1608 CH 1H 220J-T | T | 69.9/4.4 |
| C701 | 4030017840 | S.CER C2012 CH 1H 222J-T | T | 62.1/18.5 |
| C702 | 4030017840 | S.CER C2012 CH 1H 222J-T | T | 59.2/11.2 |
| C703 | 4550007500 | S.TAN F931D106MBABMA | B | 58.8/15.4 |
| Eqv. | 4550006470 | S.TAN TEESVB2 1D 106M8R | | |
| C704 | 4030011600 | S.CER C1608 JB 1E 104K-T | T | 62.4/11.4 |
| C705 | 4030011600 | S.CER C1608 JB 1E 104K-T | T | 65.6/18.2 |
| C706 | 4550007500 | S.TAN F931D106MBABMA | B | 57.8/19.4 |
| Eqv. | 4550006470 | S.TAN TEESVB2 1D 106M8R | | |
| C707 | 4030007050 | S.CER C1608 CH 1H 220J-T | T | 67.9/14.2 |
| C801 | 4030006860 | S.CER C1608 JB 1H 102K-T | T | 64.3/24.7 |
| C802 | 4030011600 | S.CER C1608 JB 1E 104K-T | T | 73.3/25.1 |
| C803 | 4550007480 | S.TAN F930J106MAABMA | B | 76.8/16.7 |
| C804 | 4030011600 | S.CER C1608 JB 1E 104K-T | T | 72.0/27.9 |
| C805 | 4550007520 | S.TAN F931A106MAABMA | B | 67.3/28.7 |
| C806 | 4030011600 | S.CER C1608 JB 1E 104K-T | T | 72.6/23.2 |
| C807 | 4550007500 | S.TAN F931D106MBABMA | B | 68.5/23.6 |
| Eqv. | 4550006470 | S.TAN TEESVB2 1D 106M8R | | |

## [DSP-TX UNIT]

| REF NO. | PARTS NO. | DESCRIPTION | M. | H/V LOCATION |
|---|---|---|---|---|
| C808 | 4030007050 | S.CER C1608 CH 1H 220J-T | T | 69.1/30.5 |
| C831 | 4030006860 | S.CER C1608 JB 1H 102K-T | T | 69.7/17.9 |
| C832 | 4030011600 | S.CER C1608 JB 1E 104K-T | T | 76.5/16.4 |
| C833 | 4550007480 | S.TAN F930J106MAABMA | B | 69.7/16.8 |
| C834 | 4030011600 | S.CER C1608 JB 1E 104K-T | T | 77.8/17.3 |
| C835 | 4550007520 | S.TAN F931A106MAABMA | B | 64.1/19.7 |
| C836 | 4030011600 | S.CER C1608 JB 1E 104K-T | T | 76.5/13.8 |
| C837 | 4550007500 | S.TAN F931D106MBABMA | B | 64.8/15.4 |
| Eqv. | 4550006470 | S.TAN TEESVB2 1D 106M8R | | |
| C838 | 4030007050 | S.CER C1608 CH 1H 220J-T | T | 73.7/20.5 |
| C871 | 4550007520 | S.TAN F931A106MAABMA | B | 75.5/29.5 |
| C872 | 4030011600 | S.CER C1608 JB 1E 104K-T | T | 73.5/27.9 |
| C873 | 4550007500 | S.TAN F931D106MBABMA | B | 75.7/24.4 |
| Eqv. | 4550006470 | S.TAN TEESVB2 1D 106M8R | | |
| C874 | 4030011600 | S.CER C1608 JB 1E 104K-T | T | 78.3/21.5 |
| C875 | 4030007050 | S.CER C1608 CH 1H 220J-T | T | 77.2/30.9 |
| C921 | 4550007510 | S.TAN F931C106MBABMA | B | 69.4/3.8 |
| C922 | 4030011600 | S.CER C1608 JB 1E 104K-T | T | 72.9/3.6 |
| C923 | 4550002830 | S.TAN TEESVD2 1V 685M12R | B | 75.5/6.1 |
| C924 | 4030011600 | S.CER C1608 JB 1E 104K-T | T | 81.9/8.0 |
| C925 | 4550007510 | S.TAN F931C106MBABMA | B | 71.2/9.4 |
| C926 | 4030011600 | S.CER C1608 JB 1E 104K-T | T | 72.9/9.0 |
| C927 | 4550002830 | S.TAN TEESVD2 1V 685M12R | B | 80.7/6.1 |
| C928 | 4030011600 | S.CER C1608 JB 1E 104K-T | T | 81.9/4.6 |
| C961 | 4030011600 | S.CER C1608 JB 1E 104K-T | B | 11.5/14.9 |
| C962 | 4550007520 | S.TAN F931A106MAABMA | B | 12.2/18.6 |
| C963 | 4030011600 | S.CER C1608 JB 1E 104K-T | B | 10.5/24.9 |
| C964 | 4550007520 | S.TAN F931A106MAABMA | B | 11.4/29.0 |
| | | | | |
| J921 | 6910013900 | CON IMSA-9180S-22A | | |
| J961 | 6910012460 | CON IMSA-9180S-30A | | |

Eqv.= This component is equivalent to the REF No. component listed above, and may be substituted on parts orders and repairs.

M.=Mounted side (T: Mounted on the Top side, B: Mounted on the Bottom side)
S.=Surface mount

## [SCOPE UNIT]

| REF NO. | PARTS NO. | DESCRIPTION | | M. | H/V LOCATION |
|---|---|---|---|---|---|
| IC1 | 1110006180 | S.IC | UPG2009TB-E3 | T | 85.1/9.7 |
| IC2 | 1180001771 | S.IC | TA79L05F(TE12LF) | T | 24.5/95.7 |
| IC31 | 1110006180 | S.IC | UPG2009TB-E3 | T | 86.5/14.1 |
| IC201 | 1180002650 | S.REG | SI-3012KS-TL | T | 116.4/64.6 |
| IC401 | 1110006131 | S.IC | UPC4094G2-E1-A | T | 15.6/88.7 |
| IC403 | 1110006131 | S.IC | UPC4094G2-E1-A | T | 26.9/88.7 |
| IC404 | 1110006131 | S.IC | UPC4094G2-E1-A | T | 44.0/87.7 |
| IC405 | 1110002700 | S.IC | NJM2904M-TE1-#FMZB | T | 39.3/70.5 |
| IC501 | 1190002031 | S.IC | AD7650ASTZ <FE> | T | 55.6/79.2 |
| IC502 | 1130006891 | S.IC | TC7S04FU(TE85RF) | T | 57.8/88.1 |
| IC505 | 1180002630 | S.REG | AD1582BRT-REEL7 [USA] | T | 55.4/94.7 |
| | 1180002631 | S.REG | AD1582BRTZ-REEL7 <FE>[EUR] | | |
| | 1180002631 | S.REG | AD1582BRTZ-REEL7 <FE> [UK] | | |
| IC601 | 1140012221 | S.IC | TMS320C6711DZDP200 <FE> | T | 88.4/81.4 |
| IC602 | 1130011930 | S.IC | SN74LVC1G04DCKR | T | 68.2/67.5 |
| IC603 | 1130011930 | S.IC | SN74LVC1G04DCKR | T | 70.8/70.4 |
| IC604 | 1130008041 | S.IC | TC7SH04FU(TE85LJF) | B | 67.5/74.7 |
| IC607 | 1110006411 | S.IC | R3111N111A-TR-F | B | 104.2/81.1 |
| IC671 | 1130012394 | S.IC | AT49BV001AN-55TU(SX2590G-3) | T | 112.8/82.9 |
| IC801 | 1130009230 | S.IC | LMX2306TMX/NOPB | T | 65.6/36.6 |
| IC803 | 1130009691 | S.IC | TC74HCT7007AF(F) S | B | 68.0/29.0 |
| IC820 | 1190001961 | S.IC | AD9857ASTZ <FE> | T | 93.7/35.6 |
| IC903 | 1120002921 | S.IC | ADM202EARNZ-REEL7 <FE> | T | 96.9/109.2 |
| IC904 | 1130005721 | S.IC | TC7W04F(TE12LF) | T | 107.5/113.1 |
| IC905 | 1130005252 | S.IC | TC74HC08AF(ELF) | B | 97.1/109.6 |
| IC906 | 1130009831 | S.IC | TC74VHCT04AF(F) | B | 108.4/109.7 |
| | | | | | |
| Q1 | 1530002060 | S.TRA | 2SC4081 T106 R | T | 67.4/6.3 |
| Q2 | 1530003852 | S.TRA | 2SC5551A-F-TD-E | T | 45.8/7.5 |
| Q11 | 1590000680 | S.TRA | DTC114EUA T106 | T | 78.2/7.5 |
| Q12 | 1590000680 | S.TRA | DTC114EUA T106 | T | 92.2/6.5 |
| Q31 | 1590000680 | S.TRA | DTC114EUA T106 | T | 78.4/3.5 |
| Q32 | 1590000680 | S.TRA | DTC114EUA T106 | T | 92.7/3.5 |
| Q33 | 1590000680 | S.TRA | DTC114EUA T106 | T | 93.0/15.4 |
| Q101 | 1530003151 | S.TRA | 2SC4673D-TD-E | T | 28.9/18.3 |
| Q201 | 1560000561 | S.FET | 2SK882-GR(TE85LF) | T | 11.5/40.4 |
| Q202 | 1560000561 | S.FET | 2SK882-GR(TE85LF) | T | 10.1/45.2 |
| Q301 | 1530003151 | S.TRA | 2SC4673D-TD-E | T | 21.5/68.0 |
| Q701 | 1530003221 | S.TRA | 2SC4406-4-TL-E | T | 75.4/54.3 |
| Q720 | 1530003221 | S.TRA | 2SC4406-4-TL-E | T | 102.0/45.5 |
| Q810 | 1530003221 | S.TRA | 2SC4406-4-TL-E | T | 73.2/37.8 |
| Q821 | 1560000331 | S.FET | 2SK210-GR(TE85RF) | T | 43.3/45.8 |
| Q841 | 1530002060 | S.TRA | 2SC4081 T106 R | T | 41.5/37.2 |
| Q842 | 1530003432 | S.TRA | 2SC5226A-4-TL-E | T | 27.5/31.7 |
| Q843 | 1530003432 | S.TRA | 2SC5226A-4-TL-E | T | 25.1/39.9 |
| Q872 | 1590000680 | S.TRA | DTC114EUA T106 | T | 30.2/32.6 |
| Q903 | 1530002280 | S.TRA | 2SC4081 T106 S | B | 130.2/111.9 |
| Q904 | 1510000510 | S.TRA | 2SA1576A T106R | B | 126.1/105.8 |
| Q921 | 1590001330 | S.TRA | DTA114EUA T106 | T | 54.5/112.7 |
| Q922 | 1590000680 | S.TRA | DTC114EUA T106 | T | 50.7/112.7 |
| Q923 | 1590001330 | S.TRA | DTA114EUA T106 | T | 43.0/113.5 |
| Q924 | 1590000680 | S.TRA | DTC114EUA T106 | T | 40.4/113.5 |
| | | | | | |
| D1 | 1750000971 | S.DIO | CPH5513-TL-E | T | 79.7/14.9 |
| D2 | 1750000971 | S.DIO | CPH5513-TL-E | T | 72.5/15.9 |
| D3 | 1750000441 | S.DIO | 1SV263-TL-E | T | 72.1/12.9 |
| D4 | 1750000431 | S.DIO | HSB88WSTR-E | T | 10.4/68.3 |
| D11 | 1790000620 | S.DIO | MA77(TX) | T | 83.2/4.6 |
| D12 | 1790000620 | S.DIO | MA77(TX) | T | 87.2/4.6 |
| D101 | 1750000431 | S.DIO | HSB88WSTR-E | T | 25.7/8.3 |
| D201 | 1710000840 | S.DIO | 1SR154-400 TE25 | B | 120.3/65.1 |
| D401 | 1790001251 | S.DIO | MA2S1110GL | T | 41.2/77.1 |
| D402 | 1790001251 | S.DIO | MA2S1110GL | T | 40.0/75.2 |
| D403 | 1790001251 | S.DIO | MA2S1110GL | T | 33.4/69.5 |
| D821 | 1750000681 | S.VAR | 1SV232(TPH2F) | T | 57.9/43.2 |
| D822 | 1750000681 | S.VAR | 1SV232(TPH2F) | T | 57.9/45.0 |
| D902 | 1750000550 | S.DIO | 1SS355 TE-17 | B | 129.7/109.6 |
| | | | | | |
| FI201 | 2030000290 | S.MON | DSF753SBF 45 MHz (FL-357) | T | 9.3/29.6 |
| FI501 | 2040000790 | S.LC | EXCCET103U | T | 71.3/76.0 |
| | | | | | |
| L1 | 6200001831 | S.COI | NLV32T-100J | T | 76.3/12.8 |
| L2 | 6200001831 | S.COI | NLV32T-100J | T | 75.1/19.1 |
| L3 | 6200001831 | S.COI | NLV32T-100J | B | 70.7/15.2 |
| L4 | 6200001831 | S.COI | NLV32T-100J | T | 67.3/12.1 |
| L5 | 6150004280 | COI | LS-484B (C-14927) | | |
| L6 | 6150004280 | COI | LS-484B (C-14927) | | |
| L7 | 6200003261 | S.COI | NLV32T-101J | T | 52.0/16.7 |
| L8 | 6140003790 | COI | LR-442 | | |
| L9 | 6200001831 | S.COI | NLV32T-100J | T | 41.2/7.6 |
| L10 | 6200001831 | S.COI | NLV32T-100J | T | 41.2/3.3 |
| L11 | 6200001831 | S.COI | NLV32T-100J | T | 57.3/3.5 |
| L12 | 6200010450 | S.COI | C2520C-R82G-A (0.82U) | T | 57.7/15.5 |
| L13 | 6200010940 | S.COI | C2520C-39NG-A | T | 68.3/20.0 |
| L14 | 6200010860 | S.COI | C2520C-R10G-A (0.1U) | T | 64.2/19.3 |
| L31 | 6200001831 | S.COI | NLV32T-100J | B | 82.6/1.8 |
| L32 | 6200001831 | S.COI | NLV32T-100J | B | 78.8/5.2 |
| L33 | 6200001831 | S.COI | NLV32T-100J | B | 86.6/6.1 |
| L34 | 6200001831 | S.COI | NLV32T-100J | B | 90.7/3.7 |
| L51 | 6200001831 | S.COI | NLV32T-100J | B | 122.1/107.2 |
| L52 | 6200001831 | S.COI | NLV32T-100J | B | 77.2/122.3 |
| L53 | 6200001831 | S.COI | NLV32T-100J | B | 77.2/117.4 |
| L54 | 6200001831 | S.COI | NLV32T-100J | T | 85.8/112.8 |
| L55 | 6200003950 | S.COI | HF50ACC 322513-T | B | 95.6/107.2 |
| L56 | 6200003950 | S.COI | HF50ACC 322513-T | B | 63.9/107.4 |
| L57 | 6200003950 | S.COI | HF50ACC 322513-T | T | 121.2/27.1 |
| L58 | 6200003950 | S.COI | HF50ACC 322513-T | B | 119.4/39.2 |
| L59 | 6200003950 | S.COI | HF50ACC 322513-T | T | 119.6/34.4 |
| L60 | 6200003950 | S.COI | HF50ACC 322513-T | T | 119.6/37.6 |
| L101 | 6140003530 | COI | LR-395 | | |
| L102 | 6140003530 | COI | LR-395 | | |

## [SCOPE UNIT]

| REF NO. | PARTS NO. | DESCRIPTION | | M. | H/V LOCATION |
|---|---|---|---|---|---|
| L103 | 6200003021 | S.COI | NLV32T-R33J | T | 22.4/19.7 |
| L104 | 6200001920 | S.COI | ELJNC R15K-F | B | 22.7/16.5 |
| L201 | 6150004250 | COI | LS-471A (C-14922) | | |
| L202 | 6150004280 | COI | LS-484B (C-14927) | | |
| L203 | 6150004280 | COI | LS-484B (C-14927) | | |
| L204 | 6200001831 | S.COI | NLV32T-100J | B | 3.3/46.7 |
| L205 | 6200002431 | S.COI | NLV25T-082J | B | 10.5/17.7 |
| L301 | 6140003530 | COI | LR-395 | | |
| L302 | 6140003530 | COI | LR-395 | | |
| L303 | 6200003041 | S.COI | NLV32T-R68J | T | 21.0/74.1 |
| L304 | 6200001831 | S.COI | NLV32T-100J | B | 23.2/72.6 |
| L401 | 6200003171 | S.COI | NLV32T-330J | T | 10.4/83.2 |
| L501 | 6200001831 | S.COI | NLV32T-100J | T | 53.8/64.3 |
| L502 | 6200001831 | S.COI | NLV32T-100J | B | 57.6/69.6 |
| L551 | 6180003501 | S.COI | SLF6028T-100M1R3-PF | T | 105.9/64.4 |
| L552 | 6200001831 | S.COI | NLV32T-100J | T | 106.3/69.9 |
| L671 | 6200001831 | S.COI | NLV32T-100J | T | 110.9/69.9 |
| L701 | 6200005491 | S.COI | NLV32T-331J | T | 76.1/51.5 |
| L720 | 6200001831 | S.COI | NLV32T-100J | T | 82.1/34.6 |
| L721 | 6200001831 | S.COI | NLV32T-100J | T | 109.4/41.1 |
| L722 | 6200001831 | S.COI | NLV32T-100J | T | 110.8/45.2 |
| L761 | 6200003011 | S.COI | NLV32T-R27J | T | 106.3/22.3 |
| L762 | 6200003021 | S.COI | NLV32T-R33J | T | 102.7/23.1 |
| L763 | 6200003251 | S.COI | NLV32T-R39J | T | 97.9/22.4 |
| L764 | 6200003251 | S.COI | NLV32T-R39J | T | 93.6/23.5 |
| L801 | 6200005491 | S.COI | NLV32T-331J | T | 69.7/40.9 |
| L802 | 6200005491 | S.COI | NLV32T-331J | T | 70.3/26.7 |
| L821 | 6200001831 | S.COI | NLV32T-100J | T | 61.8/45.8 |
| L822 | 6190001441 | COI | #E526GN-110504 | | |
| L823 | 6200001851 | S.COI | NLV32T-5R6J | T | 40.8/42.2 |
| L825 | 6200003261 | S.COI | NLV32T-101J | T | 51.8/52.3 |
| L841 | 6200003261 | S.COI | NLV32T-101J | B | 26.8/33.1 |
| L842 | 6200003031 | S.COI | NLV32T-R47J | T | 26.8/34.6 |
| L851 | 6200003431 | S.COI | NLV32T-R10J | T | 27.4/45.1 |
| L852 | 6200001471 | S.COI | NLV32T-R12J | T | 27.0/48.9 |
| L902 | 6200003241 | S.COI | NLV32T-221J | T | 128.1/107.8 |
| | | | | | |
| R1 | 7030003360 | S.RES | ERJ3GEYJ 221 V (220) | T | 79.6/12.6 |
| R2 | 7030003480 | S.RES | ERJ3GEYJ 222 V (2.2K) | T | 70.7/10.8 |
| R3 | 7030003440 | S.RES | ERJ3GEYJ 102 V (1K) | T | 70.7/9.5 |
| R4 | 7030003460 | S.RES | ERJ3GEYJ 152 V (1.5K) | T | 67.9/8.2 |
| R5 | 7030003520 | S.RES | ERJ3GEYJ 472 V (4.7K) | T | 66.6/4.4 |
| R6 | 7030003440 | S.RES | ERJ3GEYJ 102 V (1K) | T | 69.4/5.0 |
| R7 | 7030003290 | S.RES | ERJ3GEYJ 560 V (56) | T | 49.9/17.4 |
| R8 | 7030003440 | S.RES | ERJ3GEYJ 102 V (1K) | T | 48.4/3.5 |
| R9 | 7030003500 | S.RES | ERJ3GEYJ 332 V (3.3K) | T | 46.0/4.3 |
| R11 | 7310005400 | S.TRI | EVM3VBE4 22K (22K) | T | 61.7/3.8 |
| R12 | 7030003320 | S.RES | ERJ3GEYJ 101 V (100) | T | 46.8/10.7 |
| R14 | 7030003340 | S.RES | ERJ3GEYJ 151 V (150) | T | 82.3/2.4 |
| R16 | 7030003440 | S.RES | ERJ3GEYJ 102 V (1K) | T | 80.3/6.7 |
| R17 | 7030003440 | S.RES | ERJ3GEYJ 102 V (1K) | T | 81.6/6.7 |
| R18 | 7030003340 | S.RES | ERJ3GEYJ 151 V (150) | T | 87.5/2.4 |
| R20 | 7030003440 | S.RES | ERJ3GEYJ 102 V (1K) | T | 90.2/6.7 |
| R21 | 7030003440 | S.RES | ERJ3GEYJ 102 V (1K) | T | 88.9/6.7 |
| R34 | 7030003440 | S.RES | ERJ3GEYJ 102 V (1K) | T | 78.4/5.5 |
| R35 | 7030003440 | S.RES | ERJ3GEYJ 102 V (1K) | T | 89.5/3.6 |
| R36 | 7030003520 | S.RES | ERJ3GEYJ 472 V (4.7K) | T | 91.0/14.7 |
| R37 | 7030003500 | S.RES | ERJ3GEYJ 332 V (3.3K) | T | 89.7/14.7 |
| R38 | 7030003520 | S.RES | ERJ3GEYJ 472 V (4.7K) | T | 82.0/14.0 |
| R39 | 7030003500 | S.RES | ERJ3GEYJ 332 V (3.3K) | T | 83.3/14.0 |
| R51 | 7030003520 | S.RES | ERJ3GEYJ 472 V (4.7K) | T | 80.6/9.8 |
| R52 | 7030003520 | S.RES | ERJ3GEYJ 472 V (4.7K) | T | 90.3/9.9 |
| R53 | 7030003320 | S.RES | ERJ3GEYJ 101 V (100) | B | 126.0/32.4 |
| R54 | 7030003500 | S.RES | ERJ3GEYJ 332 V (3.3K) | T | 81.9/9.8 |
| R55 | 7030003500 | S.RES | ERJ3GEYJ 332 V (3.3K) | T | 88.4/9.8 |
| R61 | 7030003320 | S.RES | ERJ3GEYJ 101 V (100) | B | 128.7/49.0 |
| R62 | 7030003320 | S.RES | ERJ3GEYJ 101 V (100) | T | 122.4/50.4 |
| R63 | 7030003320 | S.RES | ERJ3GEYJ 101 V (100) | B | 128.7/51.0 |
| R64 | 7030003320 | S.RES | ERJ3GEYJ 101 V (100) | T | 122.4/53.4 |
| R65 | 7030003320 | S.RES | ERJ3GEYJ 101 V (100) | B | 128.7/53.0 |
| R66 | 7030003320 | S.RES | ERJ3GEYJ 101 V (100) | T | 123.7/56.8 |
| R71 | 7030003320 | S.RES | ERJ3GEYJ 101 V (100) | B | 128.7/55.0 |
| R72 | 7030003320 | S.RES | ERJ3GEYJ 101 V (100) | T | 121.7/47.4 |
| R73 | 7030003320 | S.RES | ERJ3GEYJ 101 V (100) | T | 121.7/43.4 |
| R74 | 7030003320 | S.RES | ERJ3GEYJ 101 V (100) | B | 128.7/43.4 |
| R75 | 7030003320 | S.RES | ERJ3GEYJ 101 V (100) | T | 121.8/44.7 |
| R76 | 7030003320 | S.RES | ERJ3GEYJ 101 V (100) | B | 128.8/45.4 |
| R77 | 7030003320 | S.RES | ERJ3GEYJ 101 V (100) | T | 121.8/46.0 |
| R81 | 7030010520 | S.RES | ERJ1TYJ 101U (100) | B | 122.9/46.2 |
| R103 | 7030003480 | S.RES | ERJ3GEYJ 222 V (2.2K) | T | 33.9/18.1 |
| R104 | 7030003320 | S.RES | ERJ3GEYJ 101 V (100) | T | 26.0/21.9 |
| R105 | 7030003370 | S.RES | ERJ3GEYJ 271 V (270) | B | 18.4/14.3 |
| R106 | 7030003230 | S.RES | ERJ3GEYJ 180 V (18) | B | 19.1/11.9 |
| R107 | 7030003370 | S.RES | ERJ3GEYJ 271 V (270) | B | 18.4/8.4 |
| R108 | 7030003370 | S.RES | ERJ3GEYJ 271 V (270) | B | 14.6/8.4 |
| R109 | 7030003230 | S.RES | ERJ3GEYJ 180 V (18) | B | 11.2/9.7 |
| R110 | 7030003370 | S.RES | ERJ3GEYJ 271 V (270) | B | 11.2/12.0 |
| R111 | 7030003550 | S.RES | ERJ3GEYJ 822 V (8.2K) | T | 29.9/15.0 |
| R112 | 7030003320 | S.RES | ERJ3GEYJ 101 V (100) | T | 33.9/19.4 |
| R113 | 7030003860 | S.RES | ERJ3GE JPW V | B | 19.5/18.0 |
| R201 | 7030003430 | S.RES | ERJ3GEYJ 821 V (820) | T | 11.3/37.2 |
| R202 | 7030003430 | S.RES | ERJ3GEYJ 821 V (820) | T | 11.3/35.9 |
| R203 | 7030003280 | S.RES | ERJ3GEYJ 470 V (47) | B | 3.1/39.9 |
| R204 | 7030003560 | S.RES | ERJ3GEYJ 103 V (10K) | T | 12.0/45.1 |
| R205 | 7030003280 | S.RES | ERJ3GEYJ 470 V (47) | B | 6.3/46.7 |
| R206 | 7030003380 | S.RES | ERJ3GEYJ 331 V (330) | B | 11.4/55.0 |
| R207 | 7030003220 | S.RES | ERJ3GEYJ 150 V (15) | B | 9.4/55.7 |
| R208 | 7030003380 | S.RES | ERJ3GEYJ 331 V (330) | B | 10.1/57.8 |
| R209 | 7030003640 | S.RES | ERJ3GEYJ 473 V (47K) | B | 9.9/46.7 |
| R210 | 7030003600 | S.RES | ERJ3GEYJ 223 V (22K) | T | 112.9/63.4 |
| R301 | 7030003320 | S.RES | ERJ3GEYJ 101 V (100) | T | 9.8/86.7 |
| R302 | 7030003370 | S.RES | ERJ3GEYJ 271 V (270) | B | 10.4/75.4 |
| R303 | 7030003230 | S.RES | ERJ3GEYJ 180 V (18) | B | 15.3/74.7 |
| R304 | 7030003370 | S.RES | ERJ3GEYJ 271 V (270) | B | 19.2/75.4 |

Eqv.= This component is equivalent to the REF No. component listed above, and may be substituted on parts orders and repairs.

M.=Mounted side (T: Mounted on the Top side, B: Mounted on the Bottom side)
S.=Surface mount

## [SCOPE UNIT]

| REF NO. | PARTS NO. | DESCRIPTION | M. | H/V LOCATION |
|---|---|---|---|---|
| R305 | 7030003320 | S.RES ERJ3GEYJ 101 V (100) | T | 23.8/74.0 |
| R306 | 7030003480 | S.RES ERJ3GEYJ 222 V (2.2K) | T | 21.4/63.5 |
| R307 | 7030003550 | S.RES ERJ3GEYJ 822 V (8.2K) | T | 18.3/67.0 |
| R308 | 7030003340 | S.RES ERJ3GEYJ 151 V (150) | T | 24.4/63.5 |
| R402 | 7030003440 | S.RES ERJ3GEYJ 102 V (1K) | B | 13.5/89.7 |
| R403 | 7030003440 | S.RES ERJ3GEYJ 102 V (1K) | B | 16.4/90.5 |
| R404 | 7030003440 | S.RES ERJ3GEYJ 102 V (1K) | B | 19.0/86.8 |
| R405 | 7030003440 | S.RES ERJ3GEYJ 102 V (1K) | B | 22.4/90.6 |
| R410 | 7030003560 | S.RES ERJ3GEYJ 103 V (10K) | T | 21.4/85.9 |
| R411 | 7030003560 | S.RES ERJ3GEYJ 103 V (10K) | T | 9.3/91.2 |
| R412 | 7030003560 | S.RES ERJ3GEYJ 103 V (10K) | T | 13.5/92.1 |
| R413 | 7030003730 | S.RES ERJ3GEYJ 274 V (270K) | T | 9.8/89.3 |
| R414 | 7030003560 | S.RES ERJ3GEYJ 103 V (10K) | B | 26.9/88.0 |
| R415 | 7030003560 | S.RES ERJ3GEYJ 103 V (10K) | T | 31.6/90.1 |
| R416 | 7310005470 | S.TRI EVM-3VSX50 BQ5 470K (470K) | T | 34.5/87.0 |
| R417 | 7030003630 | S.RES ERJ3GEYJ 393 V (39K) | T | 43.1/95.5 |
| R418 | 7030003570 | S.RES ERJ3GEYJ 123 V (12K) | T | 45.4/92.2 |
| R419 | 7030003220 | S.RES ERJ3GEYJ 150 V (15) | T | 48.0/92.4 |
| R420 | 7030003580 | S.RES ERJ3GEYJ 153 V (15K) | T | 40.9/81.8 |
| R421 | 7030003560 | S.RES ERJ3GEYJ 103 V (10K) | T | 40.5/85.5 |
| R422 | 7030003560 | S.RES ERJ3GEYJ 103 V (10K) | T | 42.6/92.2 |
| R423 | 7030003540 | S.RES ERJ3GEYJ 682 V (6.8K) | T | 43.2/94.2 |
| R425 | 7310005760 | S.TRI EVM-3VSX50 B14 10K (10K) | T | 45.3/81.3 |
| R426 | 7030003560 | S.RES ERJ3GEYJ 103 V (10K) | T | 48.8/76.5 |
| R427 | 7030003560 | S.RES ERJ3GEYJ 103 V (10K) | T | 39.9/77.2 |
| R428 | 7030003680 | S.RES ERJ3GEYJ 104 V (100K) | T | 37.0/75.8 |
| R429 | 7030003650 | S.RES ERJ3GEYJ 563 V (56K) | T | 34.7/67.8 |
| R430 | 7030003740 | S.RES ERJ3GEYJ 334 V (330K) | T | 38.9/73.9 |
| R431 | 7030003740 | S.RES ERJ3GEYJ 334 V (330K) | T | 36.3/73.9 |
| R432 | 7030003640 | S.RES ERJ3GEYJ 473 V (47K) | T | 39.6/81.8 |
| R433 | 7030003680 | S.RES ERJ3GEYJ 104 V (100K) | T | 38.9/66.4 |
| R434 | 7030003320 | S.RES ERJ3GEYJ 101 V (100) | T | 33.4/66.9 |
| R435 | 7030003680 | S.RES ERJ3GEYJ 104 V (100K) | T | 40.2/66.4 |
| R436 | 7030003680 | S.RES ERJ3GEYJ 104 V (100K) | T | 37.0/67.0 |
| R437 | 7030003680 | S.RES ERJ3GEYJ 104 V (100K) | T | 43.9/67.8 |
| R438 | 7030003680 | S.RES ERJ3GEYJ 104 V (100K) | T | 43.9/70.5 |
| R500 | 7030003860 | S.RES ERJ3GE JPW V | T | 53.3/71.7 |
| R501 | 7030003320 | S.RES ERJ3GEYJ 101 V (100) | T | 55.2/73.0 |
| R502 | 7030003560 | S.RES ERJ3GEYJ 103 V (10K) | B | 56.3/74.7 |
| R503 | 7030003560 | S.RES ERJ3GEYJ 103 V (10K) | B | 59.2/75.4 |
| R504 | 7030003560 | S.RES ERJ3GEYJ 103 V (10K) | T | 60.9/74.2 |
| R505 | 7030003560 | S.RES ERJ3GEYJ 103 V (10K) | T | 61.6/76.1 |
| R506 | 7030003560 | S.RES ERJ3GEYJ 103 V (10K) | B | 57.3/78.2 |
| R507 | 7030003320 | S.RES ERJ3GEYJ 101 V (100) | T | 61.5/87.2 |
| R509 | 7030003640 | S.RES ERJ3GEYJ 473 V (47K) | T | 60.6/89.8 |
| R602 | 7030003560 | S.RES ERJ3GEYJ 103 V (10K) | B | 101.3/75.6 |
| R603 | 7030003440 | S.RES ERJ3GEYJ 102 V (1K) | B | 83.8/77.4 |
| R604 | 7030003560 | S.RES ERJ3GEYJ 103 V (10K) | B | 92.2/67.5 |
| R605 | 7030003560 | S.RES ERJ3GEYJ 103 V (10K) | B | 89.9/65.9 |
| R606 | 7030003440 | S.RES ERJ3GEYJ 102 V (1K) | T | 79.6/95.9 |
| R607 | 7030003440 | S.RES ERJ3GEYJ 102 V (1K) | B | 77.6/95.9 |
| R608 | 7030003440 | S.RES ERJ3GEYJ 102 V (1K) | B | 71.8/88.2 |
| R609 | 7030003560 | S.RES ERJ3GEYJ 103 V (10K) | T | 83.5/65.9 |
| R610 | 7030003800 | S.RES ERJ3GEYJ 105 V (1M) | T | 70.6/67.6 |
| R611 | 7030004040 | S.RES ERJ3GEYJ 4R7 V (4.7) | T | 66.3/70.4 |
| R612 | 7030004040 | S.RES ERJ3GEYJ 4R7 V (4.7) | T | 67.6/70.4 |
| R615 | 7030003320 | S.RES ERJ3GEYJ 101 V (100) | T | 73.0/65.8 |
| R616 | 7030003520 | S.RES ERJ3GEYJ 472 V (4.7K) | T | 73.8/93.6 |
| R617 | 7030003520 | S.RES ERJ3GEYJ 472 V (4.7K) | T | 72.5/93.6 |
| R618 | 7030003560 | S.RES ERJ3GEYJ 103 V (10K) | B | 81.8/66.9 |
| R619 | 7030003560 | S.RES ERJ3GEYJ 103 V (10K) | B | 88.0/66.8 |
| R620 | 7030003440 | S.RES ERJ3GEYJ 102 V (1K) | B | 73.2/88.9 |
| R621 | 7030003440 | S.RES ERJ3GEYJ 102 V (1K) | B | 72.7/84.7 |
| R622 | 7030003860 | S.RES ERJ3GE JPW V | B | 111.9/79.5 |
| R623 | 7030003860 | S.RES ERJ3GE JPW V | B | 106.2/78.5 |
| R633 | 7030003560 | S.RES ERJ3GEYJ 103 V (10K) | B | 74.7/74.4 |
| R634 | 7030003860 | S.RES ERJ3GE JPW V | T | 74.0/70.5 |
| R635 | 7030003280 | S.RES ERJ3GEYJ 470 V (47) | T | 73.5/68.4 |
| R636 | 7030003280 | S.RES ERJ3GEYJ 470 V (47) | T | 72.7/70.5 |
| R701 | 7030003240 | S.RES ERJ3GEYJ 220 V (22) | T | 73.0/51.7 |
| R702 | 7030003560 | S.RES ERJ3GEYJ 103 V (10K) | T | 77.4/54.4 |
| R703 | 7030003320 | S.RES ERJ3GEYJ 101 V (100) | T | 72.7/55.2 |
| R704 | 7030003280 | S.RES ERJ3GEYJ 470 V (47) | T | 73.3/57.1 |
| R705 | 7030003340 | S.RES ERJ3GEYJ 151 V (150) | T | 77.4/57.1 |
| R720 | 7030003370 | S.RES ERJ3GEYJ 271 V (270) | T | 107.1/43.2 |
| R721 | 7030003560 | S.RES ERJ3GEYJ 103 V (10K) | T | 104.0/45.4 |
| R722 | 7030003340 | S.RES ERJ3GEYJ 151 V (150) | T | 107.2/46.0 |
| R723 | 7030003440 | S.RES ERJ3GEYJ 102 V (1K) | B | 91.8/28.7 |
| R724 | 7030003440 | S.RES ERJ3GEYJ 102 V (1K) | B | 91.1/30.6 |
| R725 | 7030003440 | S.RES ERJ3GEYJ 102 V (1K) | B | 87.6/28.5 |
| R726 | 7030003440 | S.RES ERJ3GEYJ 102 V (1K) | B | 91.2/26.8 |
| R727 | 7030003440 | S.RES ERJ3GEYJ 102 V (1K) | B | 94.8/43.1 |
| R729 | 7030003280 | S.RES ERJ3GEYJ 470 V (47) | T | 98.7/45.7 |
| R730 | 7030003560 | S.RES ERJ3GEYJ 103 V (10K) | B | 96.5/40.1 |
| R731 | 7030003460 | S.RES ERJ3GEYJ 152 V (1.5K) | T | 105.2/38.7 |
| R732 | 7030003510 | S.RES ERJ3GEYJ 392 V (3.9K) | T | 106.5/34.2 |
| R734 | 7030003510 | S.RES ERJ3GEYJ 392 V (3.9K) | T | 102.6/42.8 |
| R735 | 7030003280 | S.RES ERJ3GEYJ 470 V (47) | T | 106.5/30.9 |
| R736 | 7030003280 | S.RES ERJ3GEYJ 470 V (47) | T | 106.5/32.2 |
| R737 | 7030003440 | S.RES ERJ3GEYJ 102 V (1K) | T | 88.4/24.1 |
| R738 | 7030003640 | S.RES ERJ3GEYJ 473 V (47K) | T | 88.2/46.1 |
| R739 | 7030003510 | S.RES ERJ3GEYJ 392 V (3.9K) | T | 106.5/35.5 |
| R741 | 7030003860 | S.RES ERJ3GE JPW V | B | 109.8/26.3 |
| R742 | 7030003860 | S.RES ERJ3GE JPW V | T | 86.9/46.1 |
| R744 | 7030003860 | S.RES ERJ3GE JPW V | T | 87.7/26.2 |
| R745 | 7030003860 | S.RES ERJ3GE JPW V | T | 85.1/27.5 |
| R748 | 7030003860 | S.RES ERJ3GE JPW V | T | 89.8/24.1 |
| R764 | 7030003370 | S.RES ERJ3GEYJ 271 V (270) | T | 48.1/21.6 |
| R765 | 7030003230 | S.RES ERJ3GEYJ 180 V (18) | T | 45.6/20.8 |
| R766 | 7030003370 | S.RES ERJ3GEYJ 271 V (270) | T | 43.4/21.6 |
| R767 | 7030003860 | S.RES ERJ3GE JPW V | T | 95.8/21.6 |
| R771 | 7030003860 | S.RES ERJ3GE JPW V | T | 41.0/20.8 |
| R801 | 7030003440 | S.RES ERJ3GEYJ 102 V (1K) | B | 68.2/38.1 |
| R802 | 7030003440 | S.RES ERJ3GEYJ 102 V (1K) | B | 71.2/35.6 |
| R803 | 7030003440 | S.RES ERJ3GEYJ 102 V (1K) | B | 68.2/35.7 |

## [SCOPE UNIT]

| REF NO. | PARTS NO. | DESCRIPTION | M. | H/V LOCATION |
|---|---|---|---|---|
| R806 | 7030003520 | S.RES ERJ3GEYJ 472 V (4.7K) | T | 62.5/40.1 |
| R808 | 7030003600 | S.RES ERJ3GEYJ 223 V (22K) | T | 61.7/42.6 |
| R809 | 7030003840 | S.RES ERJ3GEYJ 225 V (2.2M) | T | 64.0/41.7 |
| R810 | 7030003370 | S.RES ERJ3GEYJ 271 V (270) | T | 74.1/35.2 |
| R811 | 7030003560 | S.RES ERJ3GEYJ 103 V (10K) | T | 73.9/40.3 |
| R812 | 7030003280 | S.RES ERJ3GEYJ 470 V (47) | T | 71.0/31.6 |
| R813 | 7030003340 | S.RES ERJ3GEYJ 151 V (150) | T | 73.9/45.5 |
| R814 | 7030003500 | S.RES ERJ3GEYJ 332 V (3.3K) | T | 60.3/41.1 |
| R821 | 7030003680 | S.RES ERJ3GEYJ 104 V (100K) | T | 39.4/46.0 |
| R822 | 7030003680 | S.RES ERJ3GEYJ 104 V (100K) | T | 46.9/44.7 |
| R823 | 7030003370 | S.RES ERJ3GEYJ 271 V (270) | T | 43.5/41.8 |
| R841 | 7030003200 | S.RES ERJ3GEYJ 100 V (10) | T | 38.0/39.9 |
| R842 | 7030003360 | S.RES ERJ3GEYJ 221 V (220) | T | 42.2/35.1 |
| R843 | 7030003500 | S.RES ERJ3GEYJ 332 V (3.3K) | T | 40.2/39.2 |
| R844 | 7030003540 | S.RES ERJ3GEYJ 682 V (6.8K) | T | 38.7/37.9 |
| R845 | 7030003360 | S.RES ERJ3GEYJ 221 V (220) | T | 38.7/36.6 |
| R846 | 7030003380 | S.RES ERJ3GEYJ 331 V (330) | T | 40.4/32.1 |
| R847 | 7030003370 | S.RES ERJ3GEYJ 271 V (270) | T | 30.5/30.0 |
| R848 | 7030003540 | S.RES ERJ3GEYJ 682 V (6.8K) | T | 28.4/37.3 |
| R849 | 7030003500 | S.RES ERJ3GEYJ 332 V (3.3K) | T | 30.4/34.8 |
| R850 | 7030003390 | S.RES ERJ3GEYJ 391 V (390) | T | 26.6/37.9 |
| R851 | 7030003360 | S.RES ERJ3GEYJ 221 V (220) | T | 24.4/37.1 |
| R852 | 7030003490 | S.RES ERJ3GEYJ 272 V (2.7K) | T | 28.5/40.1 |
| R853 | 7030003510 | S.RES ERJ3GEYJ 392 V (3.9K) | T | 30.4/41.1 |
| R854 | 7030003360 | S.RES ERJ3GEYJ 221 V (220) | T | 30.2/42.4 |
| R855 | 7030008180 | S.RES ERJ12YJ331U (330) | T | 42.5/53.0 |
| R856 | 7030003370 | S.RES ERJ3GEYJ 271 V (270) | T | 23.0/60.4 |
| R857 | 7030003230 | S.RES ERJ3GEYJ 180 V (18) | T | 20.7/59.6 |
| R858 | 7030003320 | S.RES ERJ3GEYJ 101 V (100) | T | 20.7/61.1 |
| R859 | 7030003260 | S.RES ERJ3GEYJ 330 V (33) | T | 24.4/44.2 |
| R860 | 7030003400 | S.RES ERJ3GEYJ 471 V (470) | T | 42.5/32.1 |
| R861 | 7030003860 | S.RES ERJ3GE JPW V | T | 24.4/60.4 |
| R905 | 7030003620 | S.RES ERJ3GEYJ 333 V (33K) | B | 127.0/108.8 |
| R906 | 7030003540 | S.RES ERJ3GEYJ 682 V (6.8K) | B | 128.6/105.9 |
| R907 | 7030003580 | S.RES ERJ3GEYJ 153 V (15K) | B | 127.3/111.2 |
| R908 | 7030003640 | S.RES ERJ3GEYJ 473 V (47K) | B | 125.0/108.9 |
| R913 | 7030003370 | S.RES ERJ3GEYJ 271 V (270) | T | 57.4/112.7 |
| R914 | 7030003370 | S.RES ERJ3GEYJ 271 V (270) | T | 45.9/113.5 |
| R951 | 7030003860 | S.RES ERJ3GE JPW V | B | 120.5/122.7 |
| R952 | 7030003860 | S.RES ERJ3GE JPW V | B | 97.5/126.4 |
| R953 | 7030003860 | S.RES ERJ3GE JPW V | B | 97.5/124.8 |
| R954 | 7030003860 | S.RES ERJ3GE JPW V | B | 114.8/103.7 |
| R955 | 7030003860 | S.RES ERJ3GE JPW V | T | 48.6/112.9 |
| R956 | 7030003860 | S.RES ERJ3GE JPW V | T | 39.7/110.7 |
| | | | | |
| C1 | 4030006880 | S.CER C1608 JB 1H 472K-T | T | 84.2/6.7 |
| C2 | 4030006880 | S.CER C1608 JB 1H 472K-T | T | 86.2/6.7 |
| C3 | 4030006880 | S.CER C1608 JB 1H 472K-T | T | 82.8/15.8 |
| C4 | 4030011340 | S.CER C1608 CH 1H 471J-T | T | 76.6/16.2 |
| C5 | 4030011340 | S.CER C1608 CH 1H 471J-T | T | 74.1/12.9 |
| C6 | 4030006880 | S.CER C1608 JB 1H 472K-T | T | 74.9/16.2 |
| C7 | 4030006880 | S.CER C1608 JB 1H 472K-T | T | 70.1/12.8 |
| C8 | 4030006880 | S.CER C1608 JB 1H 472K-T | T | 71.4/20.1 |
| C9 | 4030006880 | S.CER C1608 JB 1H 472K-T | T | 70.1/15.7 |
| C10 | 4030011600 | S.CER C1608 JB 1E 104K-T | T | 67.9/9.5 |
| C11 | 4030009510 | S.CER C1608 CH 1H 010B-T | B | 59.0/16.3 |
| C12 | 4030007040 | S.CER C1608 CH 1H 180J-T | B | 62.0/10.1 |
| C13 | 4030007040 | S.CER C1608 CH 1H 180J-T | B | 53.2/10.0 |
| C14 | 4030011340 | S.CER C1608 CH 1H 471J-T | B | 47.6/15.1 |
| C15 | 4030006880 | S.CER C1608 JB 1H 472K-T | T | 40.2/16.1 |
| C16 | 4030006880 | S.CER C1608 JB 1H 472K-T | T | 49.9/3.5 |
| C17 | 4030006880 | S.CER C1608 JB 1H 472K-T | B | 38.7/10.0 |
| C18 | 4030006960 | S.CER C1608 CH 1H 050C-T | T | 44.1/10.7 |
| C21 | 4030006880 | S.CER C1608 JB 1H 472K-T | T | 78.8/57.1 |
| C22 | 4030006880 | S.CER C1608 JB 1H 472K-T | B | 93.2/11.6 |
| C23 | 4030011600 | S.CER C1608 JB 1E 104K-T | T | 90.5/12.8 |
| C24 | 4030006880 | S.CER C1608 JB 1H 472K-T | T | 85.4/11.8 |
| C31 | 4030006880 | S.CER C1608 JB 1H 472K-T | T | 78.3/9.4 |
| C32 | 4030006880 | S.CER C1608 JB 1H 472K-T | T | 82.9/6.7 |
| C33 | 4030006880 | S.CER C1608 JB 1H 472K-T | T | 90.3/8.6 |
| C34 | 4030006880 | S.CER C1608 JB 1H 472K-T | T | 87.6/6.7 |
| C35 | 4030006900 | S.CER C1608 JB 1H 103K-T | T | 83.6/2.4 |
| C36 | 4030006900 | S.CER C1608 JB 1H 103K-T | T | 80.4/3.4 |
| C37 | 4030006900 | S.CER C1608 JB 1H 103K-T | T | 86.2/2.4 |
| C38 | 4030006900 | S.CER C1608 JB 1H 103K-T | T | 90.8/3.6 |
| C39 | 4030006860 | S.CER C1608 JB 1H 102K-T | T | 88.4/14.7 |
| C40 | 4030006860 | S.CER C1608 JB 1H 102K-T | T | 84.6/14.0 |
| C41 | 4610001830 | S.TRI TZB4S100AB10R00 (TZBX4N100BA110) | T | 57.6/19.4 |
| C42 | 4030007030 | S.CER C1608 CH 1H 150J-T | T | 68.8/15.7 |
| C43 | 4030007120 | S.CER C1608 CH 1H 820J-T | T | 67.9/17.7 |
| C44 | 4030007100 | S.CER C1608 CH 1H 560J-T | T | 67.0/15.7 |
| C45 | 4030007040 | S.CER C1608 CH 1H 180J-T | T | 64.9/16.5 |
| C46 | 4030008750 | S.CER C1608 CH 1H 360J-T | T | 64.9/14.9 |
| C51 | 4030006860 | S.CER C1608 JB 1H 102K-T | T | 83.2/9.8 |
| C52 | 4030006860 | S.CER C1608 JB 1H 102K-T | T | 87.1/9.8 |
| C53 | 4510008540 | S.ELE EEE1CA100SR | T | 31.7/95.8 |
| C54 | 4510008540 | S.ELE EEE1CA100SR | T | 47.0/69.3 |
| C55 | 4030011600 | S.CER C1608 JB 1E 104K-T | T | 20.4/94.9 |
| C56 | 4510008540 | S.ELE EEE1CA100SR | T | 16.6/95.9 |
| C57 | 4030011600 | S.CER C1608 JB 1E 104K-T | T | 27.9/96.0 |
| C101 | 4030006880 | S.CER C1608 JB 1H 472K-T | T | 33.9/16.8 |
| C102 | 4030007150 | S.CER C1608 CH 1H 151J-T | T | 24.7/19.0 |
| C103 | 4030011600 | S.CER C1608 JB 1E 104K-T | T | 24.7/21.9 |
| C106 | 4030006880 | S.CER C1608 JB 1H 472K-T | T | 33.9/20.7 |
| C107 | 4030007100 | S.CER C1608 CH 1H 560J-T | T | 23.1/16.5 |
| C108 | 4030007110 | S.CER C1608 CH 1H 680J-T | B | 23.8/21.2 |
| C109 | 4030007140 | S.CER C1608 CH 1H 121J-T | B | 22.4/18.8 |
| C110 | 4030007110 | S.CER C1608 CH 1H 680J-T | B | 21.7/21.2 |
| C201 | 4030007040 | S.CER C1608 CH 1H 180J-T | T | 10.9/24.6 |
| C202 | 4030007040 | S.CER C1608 CH 1H 180J-T | T | 4.7/30.3 |
| C204 | 4030006880 | S.CER C1608 JB 1H 472K-T | T | 11.3/34.6 |
| C205 | 4030007070 | S.CER C1608 CH 1H 330J-T | B | 5.9/39.9 |
| C206 | 4030006880 | S.CER C1608 JB 1H 472K-T | T | 11.3/38.5 |

Eqv.= This component is equivalent to the REF No. component listed above, and may be substituted on parts orders and repairs.

M.=Mounted side (T: Mounted on the Top side, B: Mounted on the Bottom side)
S.=Surface mount

## [SCOPE UNIT]

| REF NO. | PARTS NO. | DESCRIPTION | M. | H/V LOCATION |
|---|---|---|---|---|
| C207 | 4030006960 | S.CER C1608 CH 1H 050C-T | T | 11.3/42.3 |
| C208 | 4030007070 | S.CER C1608 CH 1H 330J-T | B | 8.4/51.1 |
| C209 | 4030006880 | S.CER C1608 JB 1H 472K-T | T | 7.7/46.1 |
| C210 | 4030011600 | S.CER C1608 JB 1E 104K-T | B | 2.2/50.3 |
| C211 | 4030009550 | S.CER C1608 CH 1H 2R5B-T | T | 10.9/23.2 |
| C212 | 4030006940 | S.CER C1608 CH 1H 030C-T | T | 4.7/28.9 |
| C213 | 4550007320 | S.TAN F930J226MAABMA | T | 111.2/63.4 |
| C214 | 4550007320 | S.TAN F930J226MAABMA | B | 117.7/65.5 |
| C215 | 4030011600 | S.CER C1608 JB 1E 104K-T | T | 119.9/66.5 |
| C216 | 4030017490 | S.CER C1608 JB 1A 105K-T | T | 112.9/66.5 |
| C301 | 4030007040 | S.CER C1608 CH 1H 180J-T | T | 18.8/70.5 |
| C302 | 4030006880 | S.CER C1608 JB 1H 472K-T | T | 23.8/71.2 |
| C303 | 4030006880 | S.CER C1608 JB 1H 472K-T | T | 20.0/63.5 |
| C304 | 4030006880 | S.CER C1608 JB 1H 472K-T | T | 23.0/63.5 |
| C401 | 4030008850 | S.CER C1608 JB 1H 123K-T | T | 11.1/86.7 |
| C403 | 4030018610 | S.CER C1608 CH 1H 182J-T | B | 15.6/87.5 |
| C404 | 4030018580 | S.CER C1608 CH 1H 821J-T | T | 21.0/89.3 |
| C405 | 4030007140 | S.CER C1608 CH 1H 121J-T | T | 21.0/88.0 |
| C406 | 4030017840 | S.CER C2012 CH 1H 222J-T | B | 22.7/86.8 |
| C407 | 4030017840 | S.CER C2012 CH 1H 222J-T | B | 22.7/88.8 |
| C408 | 4030007010 | S.CER C1608 CH 1H 100D-T | T | 21.7/90.6 |
| C409 | 4030007140 | S.CER C1608 CH 1H 121J-T | T | 21.7/91.9 |
| C410 | 4030011600 | S.CER C1608 JB 1E 104K-T | T | 17.8/92.1 |
| C411 | 4030011600 | S.CER C1608 JB 1E 104K-T | T | 13.5/85.2 |
| C420 | 4030011600 | S.CER C1608 JB 1E 104K-T | T | 8.5/89.3 |
| C421 | 4030006920 | S.CER C1608 CH 1H 010C-T | T | 11.1/89.3 |
| C422 | 4030006920 | S.CER C1608 CH 1H 010C-T | T | 31.6/87.3 |
| C423 | 4030011600 | S.CER C1608 JB 1E 104K-T | T | 29.1/92.1 |
| C424 | 4030011600 | S.CER C1608 JB 1E 104K-T | T | 24.8/85.2 |
| C425 | 4030011600 | S.CER C1608 JB 1E 104K-T | T | 40.2/95.5 |
| C426 | 4030006900 | S.CER C1608 JB 1H 103K-T | T | 47.5/89.7 |
| C427 | 4030011600 | S.CER C1608 JB 1E 104K-T | T | 36.0/81.0 |
| C428 | 4510008550 | S.ELE EEE1HA010SR | T | 38.1/92.2 |
| C429 | 4030011600 | S.CER C1608 JB 1E 104K-T | T | 47.5/85.5 |
| C431 | 4030006900 | S.CER C1608 JB 1H 103K-T | T | 38.6/77.2 |
| C432 | 4030011600 | S.CER C1608 JB 1E 104K-T | T | 41.5/73.9 |
| C433 | 4510008540 | S.ELE EEE1CA100SR | T | 31.5/73.3 |
| C434 | 4030011600 | S.CER C1608 JB 1E 104K-T | T | 40.5/88.6 |
| C501 | 4030011600 | S.CER C1608 JB 1E 104K-T | T | 52.6/73.0 |
| C502 | 4510008540 | S.ELE EEE1CA100SR | T | 52.2/68.6 |
| C503 | 4510008540 | S.ELE EEE1CA100SR | T | 59.3/70.6 |
| C504 | 4030011600 | S.CER C1608 JB 1E 104K-T | T | 62.0/78.7 |
| C505 | 4510008540 | S.ELE EEE1CA100SR | T | 59.6/64.6 |
| C506 | 4030011600 | S.CER C1608 JB 1E 104K-T | T | 61.6/81.8 |
| C507 | 4510008580 | S.ELE EEE0JA470SR | T | 51.0/87.4 |
| C508 | 4030017490 | S.CER C1608 JB 1A 105K-T | T | 49.3/82.9 |
| C509 | 4030011600 | S.CER C1608 JB 1E 104K-T | T | 59.7/87.9 |
| C521 | 4510009280 | S.ELE EEE1EA4R7SR | T | 59.7/93.9 |
| C522 | 4030011600 | S.CER C1608 JB 1E 104K-T | T | 55.5/92.2 |
| C523 | 4510008550 | S.ELE EEE1HA010SR | T | 51.2/94.0 |
| C524 | 4030011600 | S.CER C1608 JB 1E 104K-T | T | 55.3/97.0 |
| C551 | 4550007460 | S.TAN F930G107MBABMA | T | 99.1/64.3 |
| Eqv. | 4550006960 | S.TAN TEESVB2 0G 107M8R | | |
| C601 | 4030011600 | S.CER C1608 JB 1E 104K-T | B | 99.5/94.0 |
| C602 | 4030011600 | S.CER C1608 JB 1E 104K-T | B | 98.7/67.4 |
| C603 | 4030011600 | S.CER C1608 JB 1E 104K-T | B | 100.9/91.7 |
| C604 | 4030011600 | S.CER C1608 JB 1E 104K-T | B | 101.5/68.6 |
| C605 | 4030011600 | S.CER C1608 JB 1E 104K-T | B | 93.2/86.0 |
| C606 | 4030011600 | S.CER C1608 JB 1E 104K-T | B | 93.9/84.6 |
| C607 | 4030011600 | S.CER C1608 JB 1E 104K-T | B | 93.1/80.1 |
| C608 | 4030011600 | S.CER C1608 JB 1E 104K-T | B | 93.8/78.8 |
| C609 | 4030011600 | S.CER C1608 JB 1E 104K-T | B | 93.8/75.9 |
| C610 | 4030011600 | S.CER C1608 JB 1E 104K-T | B | 91.4/86.8 |
| C611 | 4030011600 | S.CER C1608 JB 1E 104K-T | B | 90.4/75.9 |
| C612 | 4030011600 | S.CER C1608 JB 1E 104K-T | B | 87.8/93.9 |
| C613 | 4030011600 | S.CER C1608 JB 1E 104K-T | B | 88.4/86.8 |
| C614 | 4030011600 | S.CER C1608 JB 1E 104K-T | B | 88.5/74.1 |
| C615 | 4030011600 | S.CER C1608 JB 1E 104K-T | B | 87.0/86.0 |
| C616 | 4030011600 | S.CER C1608 JB 1E 104K-T | B | 87.2/75.9 |
| C617 | 4030011600 | S.CER C1608 JB 1E 104K-T | T | 87.9/67.0 |
| C618 | 4030011600 | S.CER C1608 JB 1E 104K-T | B | 83.9/86.1 |
| C619 | 4030011600 | S.CER C1608 JB 1E 104K-T | B | 83.6/75.8 |
| C620 | 4030011600 | S.CER C1608 JB 1E 104K-T | B | 81.2/86.0 |
| C621 | 4030011600 | S.CER C1608 JB 1E 104K-T | B | 82.0/83.6 |
| C622 | 4030011600 | S.CER C1608 JB 1E 104K-T | B | 82.0/82.0 |
| C623 | 4030011600 | S.CER C1608 JB 1E 104K-T | B | 81.1/77.3 |
| C624 | 4030011600 | S.CER C1608 JB 1E 104K-T | B | 81.1/74.6 |
| C625 | 4030011600 | S.CER C1608 JB 1E 104K-T | B | 74.5/91.7 |
| C626 | 4030011600 | S.CER C1608 JB 1E 104K-T | B | 74.6/77.2 |
| C627 | 4030011600 | S.CER C1608 JB 1E 104K-T | B | 78.3/67.5 |
| C628 | 4030011600 | S.CER C1608 JB 1E 104K-T | B | 75.6/93.9 |
| C629 | 4030011600 | S.CER C1608 JB 1E 104K-T | B | 73.9/69.4 |
| C630 | 4030011600 | S.CER C1608 JB 1E 104K-T | T | 74.0/76.5 |
| C631 | 4030011600 | S.CER C1608 JB 1E 104K-T | T | 74.0/80.9 |
| C632 | 4030011600 | S.CER C1608 JB 1E 104K-T | T | 74.0/73.3 |
| C633 | 4030011600 | S.CER C1608 JB 1E 104K-T | T | 102.8/90.4 |
| C634 | 4030011600 | S.CER C1608 JB 1E 104K-T | T | 102.9/76.3 |
| C635 | 4030011600 | S.CER C1608 JB 1E 104K-T | B | 101.2/83.6 |
| C636 | 4030011600 | S.CER C1608 JB 1E 104K-T | B | 101.2/80.3 |
| C637 | 4030011600 | S.CER C1608 JB 1E 104K-T | B | 101.5/72.1 |
| C638 | 4030011600 | S.CER C1608 JB 1E 104K-T | B | 96.1/93.9 |
| C639 | 4030011600 | S.CER C1608 JB 1E 104K-T | T | 104.0/87.4 |
| C640 | 4030011600 | S.CER C1608 JB 1E 104K-T | B | 93.1/82.8 |
| C641 | 4030011600 | S.CER C1608 JB 1E 104K-T | B | 93.8/87.5 |
| C642 | 4030011600 | S.CER C1608 JB 1E 104K-T | B | 93.9/81.5 |
| C643 | 4030011600 | S.CER C1608 JB 1E 104K-T | B | 93.0/77.2 |
| C644 | 4030011600 | S.CER C1608 JB 1E 104K-T | B | 93.1/74.6 |
| C645 | 4030011600 | S.CER C1608 JB 1E 104K-T | B | 94.9/67.5 |
| C646 | 4030011600 | S.CER C1608 JB 1E 104K-T | B | 92.9/93.9 |
| C647 | 4030011600 | S.CER C1608 JB 1E 104K-T | T | 94.4/67.0 |
| C648 | 4030011600 | S.CER C1608 JB 1E 104K-T | B | 89.7/86.1 |
| C649 | 4030011600 | S.CER C1608 JB 1E 104K-T | B | 85.4/67.5 |
| C650 | 4030011600 | S.CER C1608 JB 1E 104K-T | B | 85.5/86.8 |
| C651 | 4030011600 | S.CER C1608 JB 1E 104K-T | B | 85.4/74.1 |
| C652 | 4030011600 | S.CER C1608 JB 1E 104K-T | B | 79.5/93.9 |

## [SCOPE UNIT]

| REF NO. | PARTS NO. | DESCRIPTION | M. | H/V LOCATION |
|---|---|---|---|---|
| C653 | 4030011600 | S.CER C1608 JB 1E 104K-T | B | 82.5/86.8 |
| C654 | 4030011600 | S.CER C1608 JB 1E 104K-T | T | 78.8/67.0 |
| C655 | 4030011600 | S.CER C1608 JB 1E 104K-T | B | 81.9/79.9 |
| C656 | 4030011600 | S.CER C1608 JB 1E 104K-T | B | 74.5/84.7 |
| C657 | 4030011600 | S.CER C1608 JB 1E 104K-T | B | 74.6/80.3 |
| C658 | 4030011600 | S.CER C1608 JB 1E 104K-T | B | 74.7/71.4 |
| C659 | 4030011600 | S.CER C1608 JB 1E 104K-T | B | 74.5/88.1 |
| C660 | 4510008540 | S.ELE EEE1CA100SR | T | 67.7/75.0 |
| C661 | 4030011600 | S.CER C1608 JB 1E 104K-T | B | 72.8/74.8 |
| C662 | 4030011600 | S.CER C1608 JB 1E 104K-T | T | 88.4/95.9 |
| C663 | 4030011600 | S.CER C1608 JB 1E 104K-T | T | 68.9/70.4 |
| C664 | 4030011600 | S.CER C1608 JB 1E 104K-T | T | 66.3/67.6 |
| C665 | 4030011600 | S.CER C1608 JB 1E 104K-T | B | 67.5/76.9 |
| C666 | 4550007310 | S.TAN F930J227MNMBMA | B | 108.6/74.0 |
| C667 | 4550007310 | S.TAN F930J227MNMBMA | B | 108.6/68.7 |
| C671 | 4030011600 | S.CER C1608 JB 1E 104K-T | T | 114.3/70.2 |
| C672 | 4030006880 | S.CER C1608 JB 1H 472K-T | T | 73.0/64.5 |
| C701 | 4030011600 | S.CER C1608 JB 1E 104K-T | T | 76.0/57.1 |
| C702 | 4030011600 | S.CER C1608 JB 1E 104K-T | T | 72.7/53.6 |
| C703 | 4030011600 | S.CER C1608 JB 1E 104K-T | T | 74.7/57.1 |
| C720 | 4030006880 | S.CER C1608 JB 1H 472K-T | T | 82.9/38.2 |
| C721 | 4030011600 | S.CER C1608 JB 1E 104K-T | T | 83.3/40.2 |
| C722 | 4510008540 | S.ELE EEE1CA100SR | T | 82.6/44.2 |
| C723 | 4030006880 | S.CER C1608 JB 1H 472K-T | T | 110.0/37.5 |
| C724 | 4030011600 | S.CER C1608 JB 1E 104K-T | T | 110.0/38.9 |
| C725 | 4510008540 | S.ELE EEE1CA100SR | T | 110.2/33.3 |
| C726 | 4030006880 | S.CER C1608 JB 1H 472K-T | T | 108.7/45.9 |
| C727 | 4030006880 | S.CER C1608 JB 1H 472K-T | T | 105.6/45.4 |
| C730 | 4030011600 | S.CER C1608 JB 1E 104K-T | T | 84.2/35.3 |
| C731 | 4030011600 | S.CER C1608 JB 1E 104K-T | T | 84.2/38.2 |
| C733 | 4030011600 | S.CER C1608 JB 1E 104K-T | T | 93.5/26.3 |
| C734 | 4030011600 | S.CER C1608 JB 1E 104K-T | T | 103.2/30.0 |
| C736 | 4030011600 | S.CER C1608 JB 1E 104K-T | T | 96.9/44.9 |
| C737 | 4030011600 | S.CER C1608 JB 1E 104K-T | T | 103.1/40.9 |
| C738 | 4030011600 | S.CER C1608 JB 1E 104K-T | T | 96.5/26.3 |
| C739 | 4030011600 | S.CER C1608 JB 1E 104K-T | T | 99.6/26.4 |
| C740 | 4030011600 | S.CER C1608 JB 1E 104K-T | T | 103.1/37.4 |
| C741 | 4030011600 | S.CER C1608 JB 1E 104K-T | T | 92.7/45.2 |
| C742 | 4030011600 | S.CER C1608 JB 1E 104K-T | T | 90.0/45.2 |
| C750 | 4030006900 | S.CER C1608 JB 1H 103K-T | T | 103.2/34.5 |
| C751 | 4030006900 | S.CER C1608 JB 1H 103K-T | T | 105.2/37.4 |
| C760 | 4030006880 | S.CER C1608 JB 1H 472K-T | T | 110.9/20.9 |
| C761 | 4030007150 | S.CER C1608 CH 1H 151J-T | T | 110.2/22.8 |
| C762 | 4030007110 | S.CER C1608 CH 1H 680J-T | T | 108.5/21.6 |
| C763 | 4030011280 | S.CER C1608 CH 1H 271J-T | T | 106.0/25.2 |
| C764 | 4030007080 | S.CER C1608 CH 1H 390J-T | T | 103.4/20.9 |
| C765 | 4030011830 | S.CER C1608 CH 1H 301J-T | T | 100.1/24.3 |
| C766 | 4030007020 | S.CER C1608 CH 1H 120J-T | T | 100.1/21.7 |
| C767 | 4030007170 | S.CER C1608 CH 1H 221J-T | T | 95.8/24.4 |
| C768 | 4030011280 | S.CER C1608 CH 1H 271J-T | T | 93.6/20.5 |
| C769 | 4030006860 | S.CER C1608 JB 1H 102K-T | T | 91.4/21.3 |
| C770 | 4030011280 | S.CER C1608 CH 1H 271J-T | T | 89.3/20.6 |
| C801 | 4030006880 | S.CER C1608 JB 1H 472K-T | T | 66.3/40.0 |
| C802 | 4510008540 | S.ELE EEE1CA100SR | T | 69.1/44.9 |
| C803 | 4030006900 | S.CER C1608 JB 1H 103K-T | T | 60.4/37.1 |
| C805 | 4550007660 | S.TAN F931E105MAABMA | T | 58.5/38.8 |
| Eqv. | 4550003220 | S.TAN TEESVA 1E 105M8R | | |
| C806 | 4340000240 | S.MYL ECHU 1C 682JX5 | T | 64.2/43.4 |
| C807 | 4030006880 | S.CER C1608 JB 1H 472K-T | T | 69.6/33.3 |
| C808 | 4030006880 | S.CER C1608 JB 1H 472K-T | B | 62.7/32.1 |
| C809 | 4510008540 | S.ELE EEE1CA100SR | T | 64.9/25.8 |
| C810 | 4030006880 | S.CER C1608 JB 1H 472K-T | T | 73.9/42.9 |
| C811 | 4030006880 | S.CER C1608 JB 1H 472K-T | T | 73.4/33.0 |
| C812 | 4030006880 | S.CER C1608 JB 1H 472K-T | T | 73.9/30.9 |
| C813 | 4030011600 | S.CER C1608 JB 1E 104K-T | T | 66.0/31.8 |
| C821 | 4030007060 | S.CER C1608 CH 1H 270J-T | T | 57.8/46.5 |
| C822 | 4030007100 | S.CER C1608 CH 1H 560J-T | T | 54.4/45.8 |
| C823 | 4030006960 | S.CER C1608 CH 1H 050C-T | T | 55.7/45.8 |
| C824 | 4610001850 | S.TRI TZB4R200AB10R00 (TZBX4R200BA110) | T | 50.7/44.8 |
| C825 | 4030007130 | S.CER C1608 CH 1H 101J-T | T | 47.0/46.8 |
| C826 | 4030007060 | S.CER C1608 CH 1H 270J-T | T | 40.9/46.0 |
| C827 | 4030007020 | S.CER C1608 CH 1H 120J-T | T | 45.5/44.7 |
| C828 | 4030006880 | S.CER C1608 JB 1H 472K-T | T | 43.5/43.1 |
| C829 | 4030009500 | S.CER C1608 CH 1H 0R5B-T | T | 38.0/42.9 |
| C830 | 4030006860 | S.CER C1608 JB 1H 102K-T | T | 48.0/52.8 |
| C831 | 4030006880 | S.CER C1608 JB 1H 472K-T | T | 46.4/52.8 |
| C832 | 4510008500 | S.ELE EEE1CA101WP | T | 49.4/57.7 |
| C833 | 4510008540 | S.ELE EEE1CA100SR | T | 40.3/58.0 |
| C842 | 4030006880 | S.CER C1608 JB 1H 472K-T | T | 39.5/35.1 |
| C843 | 4030006860 | S.CER C1608 JB 1H 102K-T | T | 23.9/34.4 |
| C844 | 4030006880 | S.CER C1608 JB 1H 472K-T | T | 24.6/32.4 |
| C845 | 4510008520 | S.ELE EEE1CA470SP | T | 17.7/35.4 |
| C846 | 4030006880 | S.CER C1608 JB 1H 472K-T | T | 38.5/31.3 |
| C847 | 4030006880 | S.CER C1608 JB 1H 472K-T | T | 30.4/36.2 |
| C848 | 4030006880 | S.CER C1608 JB 1H 472K-T | T | 30.4/38.3 |
| C849 | 4030006880 | S.CER C1608 JB 1H 472K-T | T | 27.0/40.1 |
| C850 | 4030006880 | S.CER C1608 JB 1H 472K-T | T | 30.4/39.7 |
| C851 | 4030006880 | S.CER C1608 JB 1H 472K-T | T | 25.2/42.3 |
| C852 | 4030007120 | S.CER C1608 CH 1H 820J-T | T | 30.1/44.3 |
| C853 | 4030007070 | S.CER C1608 CH 1H 330J-T | T | 24.4/46.9 |
| C854 | 4030007140 | S.CER C1608 CH 1H 121J-T | T | 30.1/45.9 |
| C855 | 4030007020 | S.CER C1608 CH 1H 120J-T | T | 30.1/48.2 |
| C856 | 4030007090 | S.CER C1608 CH 1H 470J-T | T | 30.2/50.4 |
| C862 | 4030006880 | S.CER C1608 JB 1H 472K-T | T | 60.4/34.5 |
| C911 | 4030008680 | S.CER C2012 JF 1C 105Z-T | T | 92.4/112.7 |
| C912 | 4030008680 | S.CER C2012 JF 1C 105Z-T | T | 92.4/109.1 |
| C913 | 4030008680 | S.CER C2012 JF 1C 105Z-T | T | 92.4/105.5 |
| C914 | 4030008680 | S.CER C2012 JF 1C 105Z-T | T | 96.9/115.3 |
| C915 | 4030008680 | S.CER C2012 JF 1C 105Z-T | T | 101.5/114.1 |
| C916 | 4030011600 | S.CER C1608 JB 1E 104K-T | T | 108.8/116.5 |
| C917 | 4030011600 | S.CER C1608 JB 1E 104K-T | B | 108.3/115.9 |
| C918 | 4030011600 | S.CER C1608 JB 1E 104K-T | B | 91.4/112.7 |

Eqv.= This component is equivalent to the REF No. component listed above, and may be substituted on parts orders and repairs.

M.=Mounted side (T: Mounted on the Top side, B: Mounted on the Bottom side)
S.=Surface mount

## [SCOPE UNIT]

| REF NO. | PARTS NO. | DESCRIPTION | | M. | H/V LOCATION |
|---|---|---|---|---|---|
| J1 | 6510028210 | CON | SJ050010 (TMP-J01X-V6) | | |
| J2 | 6510028210 | CON | SJ050010 (TMP-J01X-V6) | | |
| J3 | 6510028210 | CON | SJ050010 (TMP-J01X-V6) | | |
| J4 | 6510020001 | S.CON | 52808-3071(3090) | T | 128.0/41.5 |
| J11 | 6510028210 | CON | SJ050010 (TMP-J01X-V6) | | |
| J901 | 6510023720 | CON | LGY6501-0600C | | |
| J902 | 6510023120 | CON | CD6109SA1J0 <CVI> | | |
| J903 | 6510024040 | CON | TM11R-5M2-88-LP | | |
| J904 | 6510024033 | CON | UBA-4R-D14T-4D(LF)(SN) | | |
| J905 | 6450001941 | CON | KEY-15S-2A3A(LF)(SN) | | |
| J906 | 6510019971 | S.CON | 52808-1071 | T | 129.1/97.7 |
| J907 | 6510020251 | S.CON | B9B-PH-SM4-TB(LF)(SN) | T | 50.8/105.3 |
| J908 | 6510022311 | S.CON | B5B-PH-SM4-TB(LF)(SN) | T | 88.8/110.1 |
| J909 | 6510003471 | CON | B11B-EH-S(LF)(SN) | | |
| J910 | 6510019421 | S.CON | B8B-ZR-SM4-TF(LF)(SN) | T | 109.7/104.7 |
| DS901 | 5040002930 | S.LED | SML-512MW T86 | T | 57.2/115.2 |
| DS902 | 5040002930 | S.LED | SML-512MW T86 | T | 46.1/115.2 |
| EP901 | 6910012350 | S.BEA | MMZ1608Y 102BT | B | 131.1/119.7 |
| EP902 | 6910012350 | S.BEA | MMZ1608Y 102BT | B | 122.5/122.7 |
| EP903 | 6910012350 | S.BEA | MMZ1608Y 102BT | T | 81.4/114.1 |
| EP904 | 6910012350 | S.BEA | MMZ1608Y 102BT | T | 82.7/114.1 |
| EP905 | 6910012350 | S.BEA | MMZ1608Y 102BT | B | 79.7/113.7 |
| EP906 | 6910012350 | S.BEA | MMZ1608Y 102BT | T | 82.0/110.2 |
| EP907 | 6910012350 | S.BEA | MMZ1608Y 102BT | B | 83.8/111.5 |
| EP908 | 6910012350 | S.BEA | MMZ1608Y 102BT | B | 85.1/111.5 |

## [LOGIC UNIT]

| REF NO. | PARTS NO. | DESCRIPTION | | M. | H/V LOCATION |
|---|---|---|---|---|---|
| IC1 | 1130014630 | S.IC | MT48LC16M16A2P-75 IT:D <FE> | B | 59.3/91.9 |
| IC2 | 1130014630 | S.IC | MT48LC16M16A2P-75 IT:D <FE> | T | 59.3/99.0 |
| IC51 | 1130011591 | S.IC | IDT70V24L15PFG | B | 95.5/56.0 |
| IC52 | 1140009781 | S.IC | XC9572XL-10TQG100C | B | 116.5/56.0 |
| IC53 | 1110005822 | S.IC | R3112N281A-TR-FE | T | 142.3/100.9 |
| IC54 | 1130007431 | S.IC | TC7S14FU(TE85RF) | T | 146.6/100.7 |
| IC55 | 1130008041 | S.IC | TC7SH04FU(TE85LJF) | T | 98.0/34.5 |
| IC56 | 1130010111 | S.IC | TC7WH04FU(TE12LF) | B | 35.1/25.1 |
| IC101 | 1130011010 | S.IC | SN74CBTLV3257PWR <ACE> | T | 25.2/75.4 |
| IC102 | 1130006441 | S.IC | TC7S08F(TE85RF) | T | 62.0/39.1 |
| IC103 | 1140011561 | S.IC | HD6417751RBP200V | T | 53.5/64.9 |
| IC104 | 1130008361 | S.IC | TC7SHU04FU(TE85LJF) | T | 8.1/60.8 |
| IC105 | 1130012241 | S.IC | CY2292FXC (SX-2590J) | T | 12.6/69.0 |
| IC106 | 1130011110 | S.IC | TC74VCX04FT(EL) | T | 10.0/77.1 |
| IC201 | 1130014630 | S.IC | MT48LC16M16A2P-75 IT:D <FE> | B | 128.1/77.4 |
| IC202 | 1130014630 | S.IC | MT48LC16M16A2P-75 IT:D <FE> | B | 128.1/95.5 |
| IC203 | 1140011571 | S.IC | HD64404BTDV | T | 97.4/78.4 |
| IC204 | 1140011581 | S.IC | ADV7123KSTZ50 <FE> | T | 207.1/29.6 |
| IC205 | 1130011941 | S.IC | TC7SZ04F(TE85LF) | T | 195.9/26.4 |
| IC206 | 1130012150 | S.IC | SN74ACT04PWR | T | 196.1/20.0 |
| IC207 | 1130005721 | S.IC | TC7W04F(TE12LF) | B | 212.2/38.2 |
| IC208 | 1130014080 | S.IC | BD6517F-E2 | B | 219.1/39.3 |
| IC209 | 1190001920 | S.IC | AK5355-VT-E2 | B | 109.8/23.0 |
| IC210 | 1190001920 | S.IC | AK5355-VT-E2 | B | 120.7/23.0 |
| IC211 | 1190001910 | S.IC | AK4384-VT-E2 | B | 131.4/32.6 |
| IC212 | 1190001910 | S.IC | AK4384-VT-E2 | B | 119.2/33.5 |
| IC401 | 1130010970 | S.IC | PCI1410APGE | B | 23.5/48.6 |
| IC402 | 1130011960 | S.IC | TPS2211AIDBR | B | 21.8/31.2 |
| IC403 | 1130009570 | S.IC | BR93LC46F-WE2 | T | 24.3/67.4 |
| IC404 | 1130010990 | S.IC | RTL8139C<GMI> | B | 23.0/76.5 |
| IC601 | 1130008041 | S.IC | TC7SH04FU(TE85LJF) | B | 169.3/55.8 |
| IC602 | 1130008711 | S.IC | TC7SET04FU(T5LJF) | B | 169.3/53.3 |
| IC603 | 1110004770 | S.IC | BU9480F-E2 | T | 176.0/57.1 |
| IC604 | 1140011590 | S.IC | HD64F2377VFQ33V (EMPTY) | B | 87.0/30.5 |
| IC605 | 1140009781 | S.IC | XC9572XL-10TQG100C | B | 141.0/57.0 |
| IC607 | 1130006441 | S.IC | TC7S08F(TE85RF) | B | 59.7/22.7 |
| IC608 | 1130006441 | S.IC | TC7S08F(TE85RF) | B | 63.4/22.7 |
| IC609 | 1130005252 | S.IC | TC74HC08AF(ELF) | B | 60.0/29.9 |
| IC610 | 1130016260 | S.IC | BR24T64FVT-WE2 | B | 54.1/37.4 |
| IC801 | 1180002020 | S.REG | BA033FP-E2 | B | 144.3/112.5 |
| IC802 | 1180001541 | S.IC | TA78L08F(TE12LF) | T | 131.1/111.7 |
| IC821 | 1110002700 | S.IC | NJM2904M-TE1-#FMZB | B | 17.0/105.0 |
| IC851 | 1110003870 | S.IC | NJM2058M-TE1-#ZZZB | B | 186.4/56.1 |
| IC852 | 1110003870 | S.IC | NJM2058M-TE1-#ZZZB | B | 135.5/12.6 |
| IC853 | 1110003870 | S.IC | NJM2058M-TE1-#ZZZB | B | 114.6/10.1 |
| IC854 | 1130005721 | S.IC | TC7W04F(TE12LF) | B | 161.4/40.6 |
| Q601 | 1530002060 | S.TRA | 2SC4081 T106 R | B | 173.3/53.3 |
| Q602 | 1510000510 | S.TRA | 2SA1576A T106R | B | 173.2/57.2 |
| Q802 | 1530002060 | S.TRA | 2SC4081 T106 R | T | 159.2/70.3 |
| Q803 | 1530004210 | S.TRA | DSC7004S0L | B | 160.2/70.9 |
| Q804 | 1530004210 | S.TRA | DSC7004S0L | B | 166.8/70.8 |
| Q805 | 1530002060 | S.TRA | 2SC4081 T106 R | T | 165.8/70.3 |
| Q806 | 1530004210 | S.TRA | DSC7004S0L | B | 173.4/70.8 |
| Q807 | 1530002060 | S.TRA | 2SC4081 T106 R | T | 172.4/70.3 |
| Q808 | 1590001330 | S.TRA | DTA114EUA T106 | B | 157.8/30.2 |
| Q809 | 1590001330 | S.TRA | DTA114EUA T106 | B | 157.8/27.6 |
| Q810 | 1540000550 | S.TRA | 2SD1664 T100Q | T | 160.2/78.1 |
| Q821 | 1520000651 | S.TRA | 2SB1201S-TL-E | B | 29.0/108.5 |
| Q822 | 1530002060 | S.TRA | 2SC4081 T106 R | B | 25.6/103.6 |
| Q901 | 1590001960 | S.TRA | XP4311(TX) | B | 187.9/88.3 |
| Q902 | 1590001960 | S.TRA | XP4311(TX) | B | 188.9/79.7 |
| Q903 | 1590001960 | S.TRA | XP4311(TX) | B | 193.9/88.3 |
| Q904 | 1590001960 | S.TRA | XP4311(TX) | B | 192.9/79.7 |
| D51 | 1750000550 | S.DIO | 1SS355 TE-17 | T | 126.1/48.8 |
| D52 | 1750000550 | S.DIO | 1SS355 TE-17 [UK] only | T | 126.1/50.6 |
| D53 | 1750000550 | S.DIO | 1SS355 TE-17 | T | 126.1/52.4 |
| D54 | 1750000550 | S.DIO | 1SS355 TE-17 | T | 126.1/54.2 |
| D55 | 1750000550 | S.DIO | 1SS355 TE-17 [EUR] | T | 124.7/56.0 |
| | 1750000550 | S.DIO | 1SS355 TE-17 [UK] | | |
| D56 | 1750000550 | S.DIO | 1SS355 TE-17 [UK] only | T | 124.7/57.8 |
| D57 | 1750000550 | S.DIO | 1SS355 TE-17 | T | 124.7/59.6 |
| D58 | 1750000550 | S.DIO | 1SS355 TE-17 | T | 124.7/61.4 |
| D59 | 1750000550 | S.DIO | 1SS355 TE-17 [EUR] | T | 124.7/63.2 |
| | 1750000550 | S.DIO | 1SS355 TE-17 [UK] | | |
| D60 | 1750000550 | S.DIO | 1SS355 TE-17 | T | 130.2/48.8 |
| D61 | 1750000550 | S.DIO | 1SS355 TE-17 | T | 130.2/50.6 |
| D62 | 1750000550 | S.DIO | 1SS355 TE-17 | T | 130.1/52.4 |
| D65 | 1750000550 | S.DIO | 1SS355 TE-17 | B | 162.1/53.7 |
| D66 | 1750000550 | S.DIO | 1SS355 TE-17 [EUR] | B | 180.9/47.7 |
| | 1750000550 | S.DIO | 1SS355 TE-17 [UK] | | |
| D67 | 1750000550 | S.DIO | 1SS355 TE-17 | B | 114.3/57.2 |
| D68 | 1750000550 | S.DIO | 1SS355 TE-17 | T | 85.8/64.1 |
| D202 | 1790000981 | S.DIO | MA3J7420GL | B | 214.6/29.4 |
| D203 | 1790000981 | S.DIO | MA3J7420GL | B | 214.6/26.4 |
| D204 | 1790000981 | S.DIO | MA3J7420GL | T | 201.5/16.9 |
| D205 | 1790000981 | S.DIO | MA3J7420GL | T | 201.5/19.8 |
| D206 | 1790000981 | S.DIO | MA3J7420GL | B | 218.0/7.4 |
| D207 | 1790000981 | S.DIO | MA3J7420GL | B | 220.9/7.4 |
| D208 | 1790000981 | S.DIO | MA3J7420GL | B | 228.0/7.4 |
| D209 | 1790000981 | S.DIO | MA3J7420GL | B | 230.9/7.4 |
| D601 | 1750000550 | S.DIO | 1SS355 TE-17 | B | 175.6/52.5 |
| D801 | 1750000370 | S.DIO | DA221 TL | B | 159.2/66.6 |
| D802 | 1750000370 | S.DIO | DA221 TL | B | 165.8/66.6 |
| D803 | 1750000370 | S.DIO | DA221 TL | B | 172.4/66.6 |
| D804 | 1750000271 | S.DIO | 1SS301(TE85LF) | B | 170.1/64.2 |
| D805 | 1790001611 | S.DIO | 1SS385(TE85LF) | B | 157.3/38.2 |
| D806 | 1790001611 | S.DIO | 1SS385(TE85LF) | B | 157.3/40.3 |
| D821 | 1730002341 | S.ZEN | MAZ8047GML | B | 22.5/104.6 |
| D851 | 1750000550 | S.DIO | 1SS355 TE-17 | B | 180.9/50.2 |
| D852 | 1750000550 | S.DIO | 1SS355 TE-17 | B | 191.8/50.1 |
| D853 | 1790000981 | S.DIO | MA3J7420GL | B | 122.0/18.6 |

Eqv.= This component is equivalent to the REF No. component listed above, and may be substituted on parts orders and repairs.

M.=Mounted side (T: Mounted on the Top side, B: Mounted on the Bottom side)
S.=Surface mount

## [LOGIC UNIT]

| REF NO. | PARTS NO. | DESCRIPTION | | M. | H/V LOCATION |
|---|---|---|---|---|---|
| D854 | 1790000981 | S.DIO | MA3J7420GL | B | 119.5/18.6 |
| D855 | 1790000981 | S.DIO | MA3J7420GL | B | 107.0/18.5 |
| D856 | 1790000981 | S.DIO | MA3J7420GL | B | 104.5/18.5 |
| D857 | 1750000550 | S.DIO | 1SS355 TE-17 | B | 190.0/61.9 |
| D858 | 1750000550 | S.DIO | 1SS355 TE-17 | B | 182.2/61.9 |
| D860 | 1790000981 | S.DIO | MA3J7420GL | T | 97.6/26.4 |
| D861 | 1790000981 | S.DIO | MA3J7420GL | T | 97.6/31.4 |
| D862 | 1790000981 | S.DIO | MA3J7420GL | T | 97.9/23.8 |
| D863 | 1790000981 | S.DIO | MA3J7420GL | T | 97.6/28.9 |
| D864 | 1790000981 | S.DIO | MA3J7420GL | T | 100.4/23.8 |
| D865 | 1790000981 | S.DIO | MA3J7420GL | T | 94.4/24.8 |
| D866 | 1790000981 | S.DIO | MA3J7420GL | T | 94.4/27.3 |
| D867 | 1790000981 | S.DIO | MA3J7420GL | T | 102.9/23.8 |
| D901 | 1790000981 | S.DIO | MA3J7420GL | T | 188.1/31.2 |
| X101 | 6050011610 | S.XTA | CR-751 SMD-49 25.000 MHz <KDS> | T | 2.9/63.1 |
| X201 | 6050013240 | S.XTA | CR-920 SD3 24.576 MHz | T | 103.9/94.6 |
| X202 | 6050011910 | S.XTA | CR-780 DSX530G 48 MHz <KDS> | T | 100.2/60.6 |
| X601 | 6050011810 | S.XTA | CR-755 SMD-49 15.9744 MHz <KDS> | T | 81.9/13.6 |
| L203 | 6200002631 | S.COI | NLV25T-R10J | T | 115.2/85.6 |
| L204 | 6200002631 | S.COI | NLV25T-R10J | T | 127.0/91.7 |
| L205 | 6200002631 | S.COI | NLV25T-R10J | T | 61.2/36.7 |
| L803 | 6180003321 | S.COI | SLF6028T-150M1R0-PF | B | 88.7/112.9 |
| L804 | 6180003321 | S.COI | SLF6028T-150M1R0-PF | B | 102.5/112.9 |
| L805 | 6180003321 | S.COI | SLF6028T-150M1R0-PF | B | 95.8/112.9 |
| L806 | 6180003321 | S.COI | SLF6028T-150M1R0-PF | B | 109.0/112.9 |
| L807 | 6180003321 | S.COI | SLF6028T-150M1R0-PF | B | 115.8/112.9 |
| L808 | 6200003590 | S.COI | EXCCL3225U1 | T | 92.1/115.8 |
| L809 | 6200003590 | S.COI | EXCCL3225U1 | B | 93.1/123.2 |
| L810 | 6200003590 | S.COI | EXCCL3225U1 | B | 87.7/123.3 |
| L811 | 6200001831 | S.COI | NLV32T-100J | B | 127.9/22.6 |
| L821 | 6200003590 | S.COI | EXCCL3225U1 | B | 121.2/112.7 |
| L822 | 6200003590 | S.COI | EXCCL3225U1 | T | 125.1/115.9 |
| L823 | 6200009790 | S.COI | BLM31PG121SN1 | T | 18.2/25.6 |
| L824 | 6200003590 | S.COI | EXCCL3225U1 | B | 130.1/115.5 |
| L825 | 6200003590 | S.COI | EXCCL3225U1 | B | 133.6/116.2 |
| L826 | 6180003321 | S.COI | SLF6028T-150M1R0-PF | B | 180.0/15.5 |
| L827 | 6200003590 | S.COI | EXCCL3225U1 | T | 120.4/115.9 |
| L832 | 6200003590 | S.COI | EXCCL3225U1 | B | 80.2/122.2 |
| L833 | 6200003590 | S.COI | EXCCL3225U1 | B | 75.7/122.2 |
| L834 | 6200003590 | S.COI | EXCCL3225U1 | B | 125.7/112.2 |
| L835 | 6200003590 | S.COI | EXCCL3225U1 | B | 125.7/115.3 |
| L901 | 6200003590 | S.COI | EXCCL3225U1 | B | 214.5/74.5 |
| L902 | 6200003590 | S.COI | EXCCL3225U1 | B | 214.5/78.2 |
| L903 | 6200003590 | S.COI | EXCCL3225U1 | B | 206.6/80.0 |
| L904 | 6200003590 | S.COI | EXCCL3225U1 | B | 214.5/81.2 |
| L905 | 6200003590 | S.COI | EXCCL3225U1 | B | 21.0/114.8 |
| L906 | 6200003590 | S.COI | EXCCL3225U1 | B | 24.0/114.8 |
| L907 | 6200003590 | S.COI | EXCCL3225U1 | B | 27.0/114.8 |
| L908 | 6200003590 | S.COI | EXCCL3225U1 | B | 30.0/114.8 |
| L909 | 6200003261 | S.COI | NLV32T-101J | B | 181.4/82.6 |
| L910 | 6200003590 | S.COI | EXCCL3225U1 | B | 195.7/82.4 |
| L911 | 6200003590 | S.COI | EXCCL3225U1 | B | 221.9/76.6 |
| L912 | 6200003590 | S.COI | EXCCL3225U1 | B | 230.4/76.9 |
| L913 | 6200003590 | S.COI | EXCCL3225U1 | B | 230.4/63.0 |
| L914 | 6200003590 | S.COI | EXCCL3225U1 | B | 221.8/64.0 |
| L915 | 6200003590 | S.COI | EXCCL3225U1 | B | 230.4/66.0 |
| L916 | 6200003590 | S.COI | EXCCL3225U1 | B | 221.8/67.0 |
| L917 | 6200003590 | S.COI | EXCCL3225U1 | T | 162.3/21.7 |
| L918 | 6200003590 | S.COI | EXCCL3225U1 | T | 186.4/18.7 |
| L919 | 6200003590 | S.COI | EXCCL3225U1 | T | 186.4/22.4 |
| L920 | 6200003590 | S.COI | EXCCL3225U1 | T | 162.3/24.7 |
| L1101 | 6200003590 | S.COI | EXCCL3225U1 | T | 40.5/25.8 |
| R1 | 7030003520 | S.RES | ERJ3GEYJ 472 V (4.7K) | T | 91.6/101.4 |
| R51 | 7030003520 | S.RES | ERJ3GEYJ 472 V (4.7K) | T | 143.1/76.8 |
| R52 | 7030003560 | S.RES | ERJ3GEYJ 103 V (10K) | T | 138.7/100.7 |
| R55 | 7030003440 | S.RES | ERJ3GEYJ 102 V (1K) | B | 126.4/51.5 |
| R56 | 7030003440 | S.RES | ERJ3GEYJ 102 V (1K) | B | 123.5/46.1 |
| R57 | 7030003680 | S.RES | ERJ3GEYJ 104 V (100K) | B | 31.4/25.1 |
| R58 | 7030003680 | S.RES | ERJ3GEYJ 104 V (100K) | B | 30.1/25.1 |
| R101 | 7030003680 | S.RES | ERJ3GEYJ 104 V (100K) | T | 19.4/74.9 |
| R102 | 7030003520 | S.RES | ERJ3GEYJ 472 V (4.7K) | T | 31.1/73.8 |
| R103 | 7030003520 | S.RES | ERJ3GEYJ 472 V (4.7K) | T | 31.1/75.7 |
| R104 | 7030003520 | S.RES | ERJ3GEYJ 472 V (4.7K) | T | 19.4/73.6 |
| R105 | 7030003520 | S.RES | ERJ3GEYJ 472 V (4.7K) | T | 19.4/76.2 |
| R106 | 7030003560 | S.RES | ERJ3GEYJ 103 V (10K) | B | 54.7/60.1 |
| R107 | 7030003560 | S.RES | ERJ3GEYJ 103 V (10K) | B | 49.5/60.1 |
| R108 | 7030003560 | S.RES | ERJ3GEYJ 103 V (10K) | B | 48.5/49.6 |
| R109 | 7030003560 | S.RES | ERJ3GEYJ 103 V (10K) | B | 52.1/60.1 |
| R110 | 7030003560 | S.RES | ERJ3GEYJ 103 V (10K) | T | 54.9/49.4 |
| R111 | 7030003560 | S.RES | ERJ3GEYJ 103 V (10K) | B | 54.7/58.8 |
| R112 | 7030003560 | S.RES | ERJ3GEYJ 103 V (10K) | T | 53.6/49.4 |
| R113 | 7030003560 | S.RES | ERJ3GEYJ 103 V (10K) | B | 49.5/58.8 |
| R114 | 7030003560 | S.RES | ERJ3GEYJ 103 V (10K) | B | 45.9/49.6 |
| R115 | 7030003560 | S.RES | ERJ3GEYJ 103 V (10K) | B | 49.5/62.7 |
| R116 | 7030003560 | S.RES | ERJ3GEYJ 103 V (10K) | B | 49.5/61.4 |
| R117 | 7030003260 | S.RES | ERJ3GEYJ 330 V (33) | B | 43.3/49.5 |
| R118 | 7030003560 | S.RES | ERJ3GEYJ 103 V (10K) | B | 49.5/64.0 |
| R119 | 7030003560 | S.RES | ERJ3GEYJ 103 V (10K) | B | 41.4/50.1 |
| R120 | 7030003560 | S.RES | ERJ3GEYJ 103 V (10K) | B | 49.5/65.3 |
| R121 | 7030003560 | S.RES | ERJ3GEYJ 103 V (10K) | B | 43.3/46.9 |
| R122 | 7030003560 | S.RES | ERJ3GEYJ 103 V (10K) | B | 39.3/56.1 |
| R123 | 7030003560 | S.RES | ERJ3GEYJ 103 V (10K) | B | 43.3/45.6 |
| R124 | 7030003680 | S.RES | ERJ3GEYJ 104 V (100K) | T | 51.0/49.4 |
| R125 | 7030003520 | S.RES | ERJ3GEYJ 472 V (4.7K) | T | 52.3/49.4 |
| R126 | 7030003560 | S.RES | ERJ3GEYJ 103 V (10K) | B | 52.1/61.4 |
| R127 | 7030003560 | S.RES | ERJ3GEYJ 103 V (10K) | B | 52.1/58.8 |

## [LOGIC UNIT]

| REF NO. | PARTS NO. | DESCRIPTION | | M. | H/V LOCATION |
|---|---|---|---|---|---|
| R128 | 7030003560 | S.RES | ERJ3GEYJ 103 V (10K) | T | 53.6/45.8 |
| R129 | 7030003560 | S.RES | ERJ3GEYJ 103 V (10K) | T | 54.9/46.8 |
| R130 | 7030003560 | S.RES | ERJ3GEYJ 103 V (10K) | B | 56.4/50.5 |
| R131 | 7030003560 | S.RES | ERJ3GEYJ 103 V (10K) | B | 54.7/61.4 |
| R132 | 7030003560 | S.RES | ERJ3GEYJ 103 V (10K) | T | 56.2/49.4 |
| R133 | 7030003560 | S.RES | ERJ3GEYJ 103 V (10K) | T | 56.2/46.8 |
| R134 | 7030003200 | S.RES | ERJ3GEYJ 100 V (10) | B | 57.3/58.9 |
| R135 | 7030003200 | S.RES | ERJ3GEYJ 100 V (10) | B | 57.3/60.2 |
| R136 | 7030003200 | S.RES | ERJ3GEYJ 100 V (10) | B | 70.1/50.5 |
| R137 | 7030004050 | S.RES | ERJ3GEYJ 1R0 V (1) | B | 49.5/68.0 |
| R138 | 7030003560 | S.RES | ERJ3GEYJ 103 V (10K) | B | 49.5/69.4 |
| R139 | 7030003560 | S.RES | ERJ3GEYJ 103 V (10K) | B | 49.8/78.1 |
| R140 | 7410000990 | S.ARR | EXB-V8V 470JV (47) | T | 47.0/82.7 |
| R141 | 7410000990 | S.ARR | EXB-V8V 470JV (47) | T | 43.3/82.7 |
| R142 | 7410000990 | S.ARR | EXB-V8V 470JV (47) | T | 54.4/82.7 |
| R143 | 7410000990 | S.ARR | EXB-V8V 470JV (47) | T | 61.8/82.7 |
| R144 | 7410000990 | S.ARR | EXB-V8V 470JV (47) | T | 50.7/82.7 |
| R145 | 7410000990 | S.ARR | EXB-V8V 470JV (47) | T | 58.1/82.7 |
| R146 | 7030003280 | S.RES | ERJ3GEYJ 470 V (47) | T | 70.0/81.8 |
| R147 | 7030003280 | S.RES | ERJ3GEYJ 470 V (47) | T | 70.0/80.5 |
| R148 | 7410000990 | S.ARR | EXB-V8V 470JV (47) | T | 65.5/82.7 |
| R149 | 7410000990 | S.ARR | EXB-V8V 470JV (47) | T | 70.0/54.9 |
| R150 | 7410000990 | S.ARR | EXB-V8V 470JV (47) | T | 70.0/58.6 |
| R151 | 7410000990 | S.ARR | EXB-V8V 470JV (47) | T | 70.0/62.3 |
| R152 | 7410000990 | S.ARR | EXB-V8V 470JV (47) | T | 70.0/66.0 |
| R153 | 7030003200 | S.RES | ERJ3GEYJ 100 V (10) | T | 70.0/83.1 |
| R154 | 7410000990 | S.ARR | EXB-V8V 470JV (47) | T | 70.0/69.7 |
| R155 | 7410000990 | S.ARR | EXB-V8V 470JV (47) | T | 70.0/73.4 |
| R156 | 7410000990 | S.ARR | EXB-V8V 470JV (47) | T | 70.0/78.0 |
| R157 | 7410000800 | S.ARR | EXB-V8V 103JV (10K) | T | 77.5/38.8 |
| R158 | 7030003560 | S.RES | ERJ3GEYJ 103 V (10K) | T | 77.4/36.3 |
| R159 | 7030003560 | S.RES | ERJ3GEYJ 103 V (10K) | T | 64.3/41.4 |
| R161 | 7030003250 | S.RES | ERJ3GEYJ 270 V (27) | T | 9.1/64.6 |
| R162 | 7030003800 | S.RES | ERJ3GEYJ 105 V (1M) | T | 6.2/59.6 |
| R163 | 7030003320 | S.RES | ERJ3GEYJ 101 V (100) | T | 12.6/73.7 |
| R164 | 7030003250 | S.RES | ERJ3GEYJ 270 V (27) | B | 10.8/68.3 |
| R165 | 7030003860 | S.RES | ERJ3GE JPW V | T | 4.4/76.8 |
| R166 | 7030003860 | S.RES | ERJ3GE JPW V | T | 8.5/81.3 |
| R167 | 7030003860 | S.RES | ERJ3GE JPW V | T | 14.9/78.1 |
| R170 | 7030003600 | S.RES | ERJ3GEYJ 223 V (22K) | B | 38.6/38.7 |
| R171 | 7030003600 | S.RES | ERJ3GEYJ 223 V (22K) | B | 35.4/75.3 |
| R172 | 7030003600 | S.RES | ERJ3GEYJ 223 V (22K) | B | 35.4/76.6 |
| R173 | 7030003600 | S.RES | ERJ3GEYJ 223 V (22K) | B | 39.5/78.3 |
| R174 | 7030003600 | S.RES | ERJ3GEYJ 223 V (22K) | B | 37.4/79.0 |
| R175 | 7030003600 | S.RES | ERJ3GEYJ 223 V (22K) | B | 37.4/80.3 |
| R176 | 7030003600 | S.RES | ERJ3GEYJ 223 V (22K) | B | 35.4/74.0 |
| R201 | 7030003560 | S.RES | ERJ3GEYJ 103 V (10K) | T | 114.5/85.1 |
| R202 | 7030003560 | S.RES | ERJ3GEYJ 103 V (10K) | T | 111.3/85.1 |
| R203 | 7030003560 | S.RES | ERJ3GEYJ 103 V (10K) | T | 118.4/86.4 |
| R204 | 7030003560 | S.RES | ERJ3GEYJ 103 V (10K) | T | 118.4/85.1 |
| R205 | 7030003560 | S.RES | ERJ3GEYJ 103 V (10K) | T | 114.5/82.5 |
| R206 | 7030003560 | S.RES | ERJ3GEYJ 103 V (10K) | T | 111.3/83.8 |
| R207 | 7030003560 | S.RES | ERJ3GEYJ 103 V (10K) | T | 118.4/83.8 |
| R208 | 7030003560 | S.RES | ERJ3GEYJ 103 V (10K) | T | 118.4/82.5 |
| R209 | 7030003560 | S.RES | ERJ3GEYJ 103 V (10K) | T | 114.5/83.8 |
| R212 | 7030003640 | S.RES | ERJ3GEYJ 473 V (47K) | T | 83.8/82.0 |
| R213 | 7030003640 | S.RES | ERJ3GEYJ 473 V (47K) | T | 83.8/83.3 |
| R218 | 7030003520 | S.RES | ERJ3GEYJ 472 V (4.7K) | T | 117.0/49.0 |
| R219 | 7030003520 | S.RES | ERJ3GEYJ 472 V (4.7K) | T | 83.8/79.4 |
| R220 | 7030003520 | S.RES | ERJ3GEYJ 472 V (4.7K) | B | 94.2/74.5 |
| R221 | 7030003560 | S.RES | ERJ3GEYJ 103 V (10K) | T | 83.8/73.8 |
| R225 | 7030003560 | S.RES | ERJ3GEYJ 103 V (10K) | B | 94.2/79.7 |
| R226 | 7030003560 | S.RES | ERJ3GEYJ 103 V (10K) | B | 94.2/81.0 |
| R227 | 7030003560 | S.RES | ERJ3GEYJ 103 V (10K) | T | 92.0/98.2 |
| R228 | 7030003560 | S.RES | ERJ3GEYJ 103 V (10K) | T | 92.0/95.2 |
| R229 | 7030003560 | S.RES | ERJ3GEYJ 103 V (10K) | T | 91.2/92.1 |
| R230 | 7030003560 | S.RES | ERJ3GEYJ 103 V (10K) | T | 93.3/95.2 |
| R231 | 7030003560 | S.RES | ERJ3GEYJ 103 V (10K) | T | 92.5/92.3 |
| R232 | 7030003560 | S.RES | ERJ3GEYJ 103 V (10K) | B | 93.4/83.3 |
| R233 | 7030003560 | S.RES | ERJ3GEYJ 103 V (10K) | T | 93.3/98.2 |
| R234 | 7030003560 | S.RES | ERJ3GEYJ 103 V (10K) | T | 93.8/92.2 |
| R235 | 7030003560 | S.RES | ERJ3GEYJ 103 V (10K) | T | 94.6/95.2 |
| R236 | 7030003560 | S.RES | ERJ3GEYJ 103 V (10K) | T | 94.6/98.2 |
| R237 | 7030003560 | S.RES | ERJ3GEYJ 103 V (10K) | B | 94.7/83.3 |
| R238 | 7030003560 | S.RES | ERJ3GEYJ 103 V (10K) | T | 95.1/92.3 |
| R239 | 7030003560 | S.RES | ERJ3GEYJ 103 V (10K) | T | 95.9/95.2 |
| R240 | 7030003560 | S.RES | ERJ3GEYJ 103 V (10K) | T | 95.9/98.2 |
| R241 | 7030003560 | S.RES | ERJ3GEYJ 103 V (10K) | B | 97.0/89.4 |
| R242 | 7030003560 | S.RES | ERJ3GEYJ 103 V (10K) | T | 96.6/92.1 |
| R243 | 7030003560 | S.RES | ERJ3GEYJ 103 V (10K) | B | 96.0/83.3 |
| R244 | 7030003560 | S.RES | ERJ3GEYJ 103 V (10K) | T | 96.7/64.8 |
| R245 | 7030003560 | S.RES | ERJ3GEYJ 103 V (10K) | T | 90.2/64.8 |
| R246 | 7030003560 | S.RES | ERJ3GEYJ 103 V (10K) | T | 88.9/61.7 |
| R247 | 7030003560 | S.RES | ERJ3GEYJ 103 V (10K) | B | 96.8/74.5 |
| R248 | 7030003560 | S.RES | ERJ3GEYJ 103 V (10K) | T | 91.5/64.8 |
| R249 | 7030003560 | S.RES | ERJ3GEYJ 103 V (10K) | T | 86.3/64.8 |
| R250 | 7030003560 | S.RES | ERJ3GEYJ 103 V (10K) | T | 87.6/64.8 |
| R251 | 7030003560 | S.RES | ERJ3GEYJ 103 V (10K) | T | 90.2/61.7 |
| R252 | 7030003560 | S.RES | ERJ3GEYJ 103 V (10K) | T | 87.6/61.7 |
| R253 | 7030003560 | S.RES | ERJ3GEYJ 103 V (10K) | T | 83.8/75.1 |
| R254 | 7030003560 | S.RES | ERJ3GEYJ 103 V (10K) | T | 88.9/64.8 |
| R255 | 7030003560 | S.RES | ERJ3GEYJ 103 V (10K) | T | 86.3/61.7 |
| R256 | 7030003560 | S.RES | ERJ3GEYJ 103 V (10K) | B | 96.8/77.1 |
| R257 | 7030003560 | S.RES | ERJ3GEYJ 103 V (10K) | T | 92.8/64.8 |
| R258 | 7030003560 | S.RES | ERJ3GEYJ 103 V (10K) | B | 96.8/78.4 |
| R259 | 7030003560 | S.RES | ERJ3GEYJ 103 V (10K) | T | 92.8/61.7 |
| R260 | 7030003560 | S.RES | ERJ3GEYJ 103 V (10K) | B | 96.8/79.7 |
| R261 | 7030003560 | S.RES | ERJ3GEYJ 103 V (10K) | T | 94.1/61.7 |
| R262 | 7030003560 | S.RES | ERJ3GEYJ 103 V (10K) | B | 96.8/81.0 |
| R263 | 7030003560 | S.RES | ERJ3GEYJ 103 V (10K) | B | 94.0/66.6 |
| R264 | 7030003560 | S.RES | ERJ3GEYJ 103 V (10K) | B | 98.0/72.6 |
| R265 | 7030003560 | S.RES | ERJ3GEYJ 103 V (10K) | T | 92.8/59.1 |
| R266 | 7030003560 | S.RES | ERJ3GEYJ 103 V (10K) | T | 94.1/59.1 |
| R267 | 7030003560 | S.RES | ERJ3GEYJ 103 V (10K) | T | 95.4/64.8 |
| R268 | 7030003560 | S.RES | ERJ3GEYJ 103 V (10K) | B | 91.4/66.6 |

Eqv.= This component is equivalent to the REF No. component listed above, and may be substituted on parts orders and repairs.

M.=Mounted side (T: Mounted on the Top side, B: Mounted on the Bottom side)
S.=Surface mount

## [LOGIC UNIT]

| REF NO. | PARTS NO. | DESCRIPTION | M. | H/V LOCATION |
|---|---|---|---|---|
| R269 | 7030003560 | S.RES ERJ3GEYJ 103 V (10K) | T | 94.1/64.8 |
| R270 | 7030003560 | S.RES ERJ3GEYJ 103 V (10K) | T | 91.5/61.7 |
| R271 | 7030003560 | S.RES ERJ3GEYJ 103 V (10K) | T | 91.5/59.1 |
| R272 | 7030003560 | S.RES ERJ3GEYJ 103 V (10K) | B | 114.8/71.1 |
| R273 | 7030003560 | S.RES ERJ3GEYJ 103 V (10K) | T | 114.0/68.2 |
| R274 | 7030003560 | S.RES ERJ3GEYJ 103 V (10K) | B | 99.9/79.7 |
| R275 | 7030003560 | S.RES ERJ3GEYJ 103 V (10K) | T | 111.1/69.5 |
| R276 | 7030003560 | S.RES ERJ3GEYJ 103 V (10K) | T | 108.7/64.9 |
| R277 | 7030003560 | S.RES ERJ3GEYJ 103 V (10K) | T | 114.0/66.9 |
| R278 | 7030003560 | S.RES ERJ3GEYJ 103 V (10K) | T | 114.0/65.6 |
| R279 | 7030003560 | S.RES ERJ3GEYJ 103 V (10K) | B | 99.9/81.0 |
| R280 | 7030003560 | S.RES ERJ3GEYJ 103 V (10K) | T | 114.0/69.5 |
| R281 | 7030003560 | S.RES ERJ3GEYJ 103 V (10K) | B | 100.7/75.2 |
| R282 | 7030003560 | S.RES ERJ3GEYJ 103 V (10K) | B | 99.4/75.2 |
| R283 | 7030003560 | S.RES ERJ3GEYJ 103 V (10K) | B | 105.6/65.3 |
| R284 | 7030003560 | S.RES ERJ3GEYJ 103 V (10K) | B | 105.6/66.6 |
| R285 | 7030003560 | S.RES ERJ3GEYJ 103 V (10K) | B | 99.9/78.4 |
| R286 | 7030003560 | S.RES ERJ3GEYJ 103 V (10K) | T | 114.0/64.3 |
| R287 | 7030003560 | S.RES ERJ3GEYJ 103 V (10K) | T | 103.5/65.6 |
| R288 | 7030003560 | S.RES ERJ3GEYJ 103 V (10K) | T | 108.7/63.4 |
| R289 | 7030003560 | S.RES ERJ3GEYJ 103 V (10K) | T | 100.9/65.5 |
| R290 | 7030003560 | S.RES ERJ3GEYJ 103 V (10K) | B | 99.9/77.1 |
| R291 | 7030003560 | S.RES ERJ3GEYJ 103 V (10K) | T | 106.1/65.5 |
| R292 | 7030003560 | S.RES ERJ3GEYJ 103 V (10K) | B | 94.2/75.8 |
| R293 | 7030003560 | S.RES ERJ3GEYJ 103 V (10K) | B | 94.2/77.1 |
| R294 | 7030003560 | S.RES ERJ3GEYJ 103 V (10K) | B | 94.2/78.4 |
| R295 | 7030003640 | S.RES ERJ3GEYJ 473 V (47K) | B | 96.8/75.8 |
| R296 | 7030003560 | S.RES ERJ3GEYJ 103 V (10K) | T | 111.3/87.7 |
| R297 | 7030003560 | S.RES ERJ3GEYJ 103 V (10K) | T | 111.3/91.6 |
| R298 | 7030003560 | S.RES ERJ3GEYJ 103 V (10K) | T | 118.4/91.6 |
| R299 | 7030003560 | S.RES ERJ3GEYJ 103 V (10K) | T | 111.3/90.3 |
| R300 | 7030003560 | S.RES ERJ3GEYJ 103 V (10K) | T | 114.5/90.3 |
| R301 | 7030003560 | S.RES ERJ3GEYJ 103 V (10K) | T | 118.4/90.3 |
| R302 | 7030003560 | S.RES ERJ3GEYJ 103 V (10K) | T | 114.5/91.6 |
| R303 | 7030003560 | S.RES ERJ3GEYJ 103 V (10K) | T | 118.4/89.0 |
| R304 | 7030003560 | S.RES ERJ3GEYJ 103 V (10K) | T | 114.5/89.0 |
| R305 | 7030003560 | S.RES ERJ3GEYJ 103 V (10K) | T | 111.3/89.0 |
| R306 | 7030003560 | S.RES ERJ3GEYJ 103 V (10K) | T | 111.3/86.4 |
| R307 | 7030003560 | S.RES ERJ3GEYJ 103 V (10K) | T | 114.5/86.4 |
| R308 | 7030003560 | S.RES ERJ3GEYJ 103 V (10K) | T | 118.4/87.7 |
| R309 | 7030003560 | S.RES ERJ3GEYJ 103 V (10K) | T | 114.5/87.7 |
| R310 | 7030003560 | S.RES ERJ3GEYJ 103 V (10K) | T | 111.1/68.2 |
| R311 | 7030003560 | S.RES ERJ3GEYJ 103 V (10K) | B | 116.1/71.1 |
| R313 | 7030003410 | S.RES ERJ3GEYJ 561 V (560) | T | 209.9/36.8 |
| R314 | 7030003340 | S.RES ERJ3GEYJ 151 V (150) | B | 216.8/32.6 |
| R315 | 7030003340 | S.RES ERJ3GEYJ 151 V (150) | B | 218.1/32.6 |
| R316 | 7030003340 | S.RES ERJ3GEYJ 151 V (150) | B | 216.8/29.6 |
| R317 | 7030003340 | S.RES ERJ3GEYJ 151 V (150) | B | 218.1/29.6 |
| R318 | 7030003340 | S.RES ERJ3GEYJ 151 V (150) | B | 216.8/26.6 |
| R319 | 7030003340 | S.RES ERJ3GEYJ 151 V (150) | B | 218.1/26.6 |
| R320 | 7030003240 | S.RES ERJ3GEYJ 220 V (22) | T | 204.0/17.8 |
| R321 | 7030003240 | S.RES ERJ3GEYJ 220 V (22) | T | 204.0/20.7 |
| R322 | 7030003250 | S.RES ERJ3GEYJ 270 V (27) | B | 214.0/7.4 |
| R323 | 7030003250 | S.RES ERJ3GEYJ 270 V (27) | B | 216.0/3.3 |
| R324 | 7030003580 | S.RES ERJ3GEYJ 153 V (15K) | B | 214.0/6.1 |
| R325 | 7030003580 | S.RES ERJ3GEYJ 153 V (15K) | B | 216.0/4.6 |
| R326 | 7030003250 | S.RES ERJ3GEYJ 270 V (27) | B | 227.4/5.0 |
| R327 | 7030003250 | S.RES ERJ3GEYJ 270 V (27) | B | 230.0/5.0 |
| R328 | 7030003580 | S.RES ERJ3GEYJ 153 V (15K) | B | 228.2/3.1 |
| R329 | 7030003580 | S.RES ERJ3GEYJ 153 V (15K) | B | 230.8/3.1 |
| R330 | 7030003560 | S.RES ERJ3GEYJ 103 V (10K) | B | 222.6/38.9 |
| R331 | 7030003560 | S.RES ERJ3GEYJ 103 V (10K) | B | 223.9/38.9 |
| R332 | 7030003640 | S.RES ERJ3GEYJ 473 V (47K) | B | 104.7/25.9 |
| R333 | 7030003640 | S.RES ERJ3GEYJ 473 V (47K) | B | 114.0/19.2 |
| R334 | 7030003640 | S.RES ERJ3GEYJ 473 V (47K) | B | 110.8/19.5 |
| R335 | 7030003280 | S.RES ERJ3GEYJ 470 V (47) | B | 109.9/26.4 |
| R336 | 7030003640 | S.RES ERJ3GEYJ 473 V (47K) | B | 115.6/25.9 |
| R337 | 7030003640 | S.RES ERJ3GEYJ 473 V (47K) | B | 125.1/23.7 |
| R338 | 7030003640 | S.RES ERJ3GEYJ 473 V (47K) | B | 125.2/20.7 |
| R339 | 7030003280 | S.RES ERJ3GEYJ 470 V (47) | B | 120.2/27.7 |
| R340 | 7030003280 | S.RES ERJ3GEYJ 470 V (47) | B | 130.8/38.2 |
| R341 | 7030003640 | S.RES ERJ3GEYJ 473 V (47K) | B | 135.8/33.5 |
| R342 | 7030003280 | S.RES ERJ3GEYJ 470 V (47) | B | 121.7/36.9 |
| R343 | 7030003640 | S.RES ERJ3GEYJ 473 V (47K) | B | 119.6/30.0 |
| R344 | 7030003520 | S.RES ERJ3GEYJ 472 V (4.7K) | B | 129.2/29.2 |
| R345 | 7030003520 | S.RES ERJ3GEYJ 472 V (4.7K) | B | 117.0/30.0 |
| R350 | 7030003860 | S.RES ERJ3GE JPW V | T | 119.6/49.0 |
| R351 | 7030003860 | S.RES ERJ3GE JPW V | B | 100.7/83.3 |
| R353 | 7030003860 | S.RES ERJ3GE JPW V | B | 187.5/12.3 |
| R355 | 7030003860 | S.RES ERJ3GE JPW V | B | 187.5/13.6 |
| R356 | 7030003860 | S.RES ERJ3GE JPW V | B | 185.4/10.0 |
| R361 | 7030003320 | S.RES ERJ3GEYJ 101 V (100) | T | 193.5/25.7 |
| R401 | 7030003320 | S.RES ERJ3GEYJ 101 V (100) | B | 39.9/44.9 |
| R403 | 7030003560 | S.RES ERJ3GEYJ 103 V (10K) | B | 16.5/35.7 |
| R404 | 7030003560 | S.RES ERJ3GEYJ 103 V (10K) | B | 22.9/35.7 |
| R405 | 7030003560 | S.RES ERJ3GEYJ 103 V (10K) | B | 7.9/40.9 |
| R406 | 7030003560 | S.RES ERJ3GEYJ 103 V (10K) | T | 24.4/46.5 |
| R407 | 7030003560 | S.RES ERJ3GEYJ 103 V (10K) | T | 22.5/47.2 |
| R408 | 7030003560 | S.RES ERJ3GEYJ 103 V (10K) | T | 28.1/51.9 |
| R409 | 7030003560 | S.RES ERJ3GEYJ 103 V (10K) | T | 22.9/57.1 |
| R410 | 7030003560 | S.RES ERJ3GEYJ 103 V (10K) | T | 20.3/57.1 |
| R411 | 7030003560 | S.RES ERJ3GEYJ 103 V (10K) | T | 24.2/57.1 |
| R412 | 7030003560 | S.RES ERJ3GEYJ 103 V (10K) | T | 25.5/57.1 |
| R413 | 7030003560 | S.RES ERJ3GEYJ 103 V (10K) | T | 26.8/57.1 |
| R414 | 7030003560 | S.RES ERJ3GEYJ 103 V (10K) | T | 21.6/57.1 |
| R415 | 7030003560 | S.RES ERJ3GEYJ 103 V (10K) | B | 25.6/26.3 |
| R416 | 7030003560 | S.RES ERJ3GEYJ 103 V (10K) | B | 24.3/26.3 |
| R417 | 7030003560 | S.RES ERJ3GEYJ 103 V (10K) | B | 23.0/26.3 |
| R418 | 7030003320 | S.RES ERJ3GEYJ 101 V (100) | B | 36.1/82.6 |
| R419 | 7030003440 | S.RES ERJ3GEYJ 102 V (1K) | B | 10.5/83.4 |
| R420 | 7030003580 | S.RES ERJ3GEYJ 153 V (15K) | B | 11.0/81.5 |
| R421 | 7030003470 | S.RES ERJ3GEYJ 182 V (1.8K) | B | 12.3/76.4 |
| R422 | 7030003250 | S.RES ERJ3GEYJ 270 V (27) | B | 11.6/74.3 |
| R423 | 7030003560 | S.RES ERJ3GEYJ 103 V (10K) | B | 14.6/90.2 |
| R424 | 7030003560 | S.RES ERJ3GEYJ 103 V (10K) | B | 11.6/85.8 |

## [LOGIC UNIT]

| REF NO. | PARTS NO. | DESCRIPTION | M. | H/V LOCATION |
|---|---|---|---|---|
| R425 | 7030003380 | S.RES ERJ3GEYJ 331 V (330) | T | 9.3/96.5 |
| R426 | 7030003380 | S.RES ERJ3GEYJ 331 V (330) | T | 9.3/94.9 |
| R427 | 7030003380 | S.RES ERJ3GEYJ 331 V (330) | T | 9.3/93.2 |
| R428 | 7030003320 | S.RES ERJ3GEYJ 101 V (100) | B | 147.5/21.3 |
| R429 | 7030003320 | S.RES ERJ3GEYJ 101 V (100) | B | 148.8/21.3 |
| R430 | 7030003320 | S.RES ERJ3GEYJ 101 V (100) | B | 151.4/21.3 |
| R431 | 7030003320 | S.RES ERJ3GEYJ 101 V (100) | B | 150.1/21.3 |
| R432 | 7030003320 | S.RES ERJ3GEYJ 101 V (100) | B | 154.3/15.2 |
| R433 | 7030003320 | S.RES ERJ3GEYJ 101 V (100) | B | 155.6/15.2 |
| R434 | 7030003320 | S.RES ERJ3GEYJ 101 V (100) | B | 155.6/18.4 |
| R435 | 7030003320 | S.RES ERJ3GEYJ 101 V (100) | B | 154.3/18.4 |
| R436 | 7030003340 | S.RES ERJ3GEYJ 151 V (150) | B | 156.5/6.7 |
| R437 | 7030003340 | S.RES ERJ3GEYJ 151 V (150) | B | 158.5/6.7 |
| R438 | 7030003340 | S.RES ERJ3GEYJ 151 V (150) | B | 162.5/6.7 |
| R439 | 7030003340 | S.RES ERJ3GEYJ 151 V (150) | B | 164.5/6.7 |
| R440 | 7030003340 | S.RES ERJ3GEYJ 151 V (150) | B | 156.5/4.1 |
| R441 | 7030003340 | S.RES ERJ3GEYJ 151 V (150) | B | 158.5/4.1 |
| R442 | 7030003340 | S.RES ERJ3GEYJ 151 V (150) | B | 164.5/4.1 |
| R443 | 7030003340 | S.RES ERJ3GEYJ 151 V (150) | B | 162.5/4.1 |
| R450 | 7030003860 | S.RES ERJ3GE JPW V | T | 36.8/35.5 |
| R601 | 7030003620 | S.RES ERJ3GEYJ 333 V (33K) | B | 175.0/55.5 |
| R602 | 7030003590 | S.RES ERJ3GEYJ 183 V (18K) | B | 171.3/53.2 |
| R603 | 7030003540 | S.RES ERJ3GEYJ 682 V (6.8K) | B | 173.2/55.2 |
| R604 | 7030003640 | S.RES ERJ3GEYJ 473 V (47K) | B | 171.3/55.8 |
| R605 | 7030003680 | S.RES ERJ3GEYJ 104 V (100K) | B | 167.3/55.1 |
| R606 | 7030003680 | S.RES ERJ3GEYJ 104 V (100K) | B | 102.8/31.7 |
| R607 | 7030003350 | S.RES ERJ3GEYJ 181 V (180) | B | 87.8/14.3 |
| R608 | 7030003520 | S.RES ERJ3GEYJ 472 V (4.7K) | B | 90.6/14.3 |
| R609 | 7030003440 | S.RES ERJ3GEYJ 102 V (1K) | T | 80.8/23.6 |
| R610 | 7030003440 | S.RES ERJ3GEYJ 102 V (1K) | T | 80.8/24.9 |
| R611 | 7030003440 | S.RES ERJ3GEYJ 102 V (1K) | T | 80.9/26.2 |
| R612 | 7030003440 | S.RES ERJ3GEYJ 102 V (1K) | T | 80.1/27.5 |
| R613 | 7030003440 | S.RES ERJ3GEYJ 102 V (1K) | T | 83.4/27.9 |
| R614 | 7030003440 | S.RES ERJ3GEYJ 102 V (1K) | T | 83.4/29.2 |
| R615 | 7030003440 | S.RES ERJ3GEYJ 102 V (1K) | T | 83.4/30.6 |
| R616 | 7030003440 | S.RES ERJ3GEYJ 102 V (1K) | T | 83.4/31.9 |
| R617 | 7030003800 | S.RES ERJ3GEYJ 105 V (1M) | T | 86.5/31.8 |
| R618 | 7030003800 | S.RES ERJ3GEYJ 105 V (1M) | T | 86.5/30.5 |
| R619 | 7030003800 | S.RES ERJ3GEYJ 105 V (1M) | T | 86.5/29.2 |
| R620 | 7030003800 | S.RES ERJ3GEYJ 105 V (1M) | T | 86.5/27.9 |
| R621 | 7030003800 | S.RES ERJ3GEYJ 105 V (1M) | T | 84.2/26.6 |
| R622 | 7030003800 | S.RES ERJ3GEYJ 105 V (1M) | T | 84.2/25.3 |
| R623 | 7030003800 | S.RES ERJ3GEYJ 105 V (1M) | T | 84.4/23.6 |
| R624 | 7030003800 | S.RES ERJ3GEYJ 105 V (1M) | T | 84.4/22.3 |
| R625 | 7030003640 | S.RES ERJ3GEYJ 473 V (47K) | B | 68.7/27.3 |
| R626 | 7030003600 | S.RES ERJ3GEYJ 223 V (22K) | B | 68.7/28.6 |
| R627 | 7030003640 | S.RES ERJ3GEYJ 473 V (47K) | B | 66.4/36.4 |
| R628 | 7030003640 | S.RES ERJ3GEYJ 473 V (47K) | B | 66.4/35.1 |
| R629 | 7030003640 | S.RES ERJ3GEYJ 473 V (47K) | B | 71.3/35.0 |
| R630 | 7030003520 | S.RES ERJ3GEYJ 472 V (4.7K) | B | 68.7/32.5 |
| R631 | 7030003520 | S.RES ERJ3GEYJ 472 V (4.7K) | T | 67.4/27.1 |
| R632 | 7030003520 | S.RES ERJ3GEYJ 472 V (4.7K) | T | 67.4/31.0 |
| R633 | 7030003520 | S.RES ERJ3GEYJ 472 V (4.7K) | T | 67.4/28.4 |
| R634 | 7030003520 | S.RES ERJ3GEYJ 472 V (4.7K) | B | 66.4/33.8 |
| R635 | 7030003520 | S.RES ERJ3GEYJ 472 V (4.7K) | T | 67.4/29.7 |
| R636 | 7030003640 | S.RES ERJ3GEYJ 473 V (47K) | B | 58.2/19.6 |
| R637 | 7030003640 | S.RES ERJ3GEYJ 473 V (47K) | B | 61.9/19.6 |
| R639 | 7030003640 | S.RES ERJ3GEYJ 473 V (47K) | T | 99.1/19.0 |
| R640 | 7030003640 | S.RES ERJ3GEYJ 473 V (47K) | T | 97.8/19.0 |
| R641 | 7030003640 | S.RES ERJ3GEYJ 473 V (47K) | T | 96.5/19.0 |
| R642 | 7030003640 | S.RES ERJ3GEYJ 473 V (47K) | T | 95.2/19.0 |
| R643 | 7030003600 | S.RES ERJ3GEYJ 223 V (22K) | B | 81.0/46.3 |
| R644 | 7030003560 | S.RES ERJ3GEYJ 103 V (10K) | B | 82.3/46.3 |
| R645 | 7030003520 | S.RES ERJ3GEYJ 472 V (4.7K) | T | 93.2/41.0 |
| R646 | 7030003720 | S.RES ERJ3GEYJ 224 V (220K) | B | 101.8/41.6 |
| R647 | 7030003720 | S.RES ERJ3GEYJ 224 V (220K) | B | 102.8/44.2 |
| R648 | 7030003720 | S.RES ERJ3GEYJ 224 V (220K) | B | 103.8/41.6 |
| R649 | 7030003720 | S.RES ERJ3GEYJ 224 V (220K) | B | 104.8/44.2 |
| R650 | 7030003720 | S.RES ERJ3GEYJ 224 V (220K) | B | 105.8/41.6 |
| R651 | 7030003720 | S.RES ERJ3GEYJ 224 V (220K) | B | 106.8/44.2 |
| R652 | 7030003720 | S.RES ERJ3GEYJ 224 V (220K) | B | 107.8/41.6 |
| R653 | 7030003720 | S.RES ERJ3GEYJ 224 V (220K) | B | 108.8/44.2 |
| R654 | 7030003520 | S.RES ERJ3GEYJ 472 V (4.7K) | B | 102.8/39.3 |
| R655 | 7030003520 | S.RES ERJ3GEYJ 472 V (4.7K) | B | 102.8/37.8 |
| R656 | 7030003520 | S.RES ERJ3GEYJ 472 V (4.7K) | T | 144.4/60.0 |
| R657 | 7030003720 | S.RES ERJ3GEYJ 224 V (220K) | B | 68.7/26.0 |
| R658 | 7030003640 | S.RES ERJ3GEYJ 473 V (47K) | B | 84.3/44.2 |
| R659 | 7030003640 | S.RES ERJ3GEYJ 473 V (47K) | B | 84.3/45.5 |
| R660 | 7030003640 | S.RES ERJ3GEYJ 473 V (47K) | B | 102.8/29.6 |
| R661 | 7030003640 | S.RES ERJ3GEYJ 473 V (47K) | B | 69.4/16.5 |
| R662 | 7030003640 | S.RES ERJ3GEYJ 473 V (47K) | B | 89.3/14.3 |
| R663 | 7030003640 | S.RES ERJ3GEYJ 473 V (47K) | B | 71.3/15.9 |
| R664 | 7030003640 | S.RES ERJ3GEYJ 473 V (47K) | B | 71.3/17.2 |
| R665 | 7030003560 | S.RES ERJ3GEYJ 103 V (10K) | B | 93.2/14.3 |
| R666 | 7030003560 | S.RES ERJ3GEYJ 103 V (10K) | B | 78.4/16.5 |
| R667 | 7030003560 | S.RES ERJ3GEYJ 103 V (10K) | B | 77.1/16.0 |
| R668 | 7030003640 | S.RES ERJ3GEYJ 473 V (47K) | B | 85.0/16.9 |
| R669 | 7030003640 | S.RES ERJ3GEYJ 473 V (47K) | B | 71.3/14.6 |
| R670 | 7030003640 | S.RES ERJ3GEYJ 473 V (47K) | T | 94.5/43.6 |
| R671 | 7030003640 | S.RES ERJ3GEYJ 473 V (47K) | T | 95.8/43.6 |
| R672 | 7030003640 | S.RES ERJ3GEYJ 473 V (47K) | B | 75.8/16.9 |
| R673 | 7030003640 | S.RES ERJ3GEYJ 473 V (47K) | B | 74.4/16.9 |
| R674 | 7030003640 | S.RES ERJ3GEYJ 473 V (47K) | T | 91.3/36.9 |
| R675 | 7030003640 | S.RES ERJ3GEYJ 473 V (47K) | T | 89.1/31.8 |
| R676 | 7030003640 | S.RES ERJ3GEYJ 473 V (47K) | B | 94.5/14.3 |
| R677 | 7030003520 | S.RES ERJ3GEYJ 472 V (4.7K) | T | 146.2/65.2 |
| R678 | 7030003720 | S.RES ERJ3GEYJ 224 V (220K) | B | 68.7/22.1 |
| R679 | 7030003640 | S.RES ERJ3GEYJ 473 V (47K) | B | 91.9/14.3 |
| R680 | 7030003520 | S.RES ERJ3GEYJ 472 V (4.7K) | T | 144.7/65.2 |
| R681 | 7030003520 | S.RES ERJ3GEYJ 472 V (4.7K) | T | 147.6/65.1 |
| R682 | 7030003520 | S.RES ERJ3GEYJ 472 V (4.7K) | B | 152.8/60.9 |
| R683 | 7030003720 | S.RES ERJ3GEYJ 224 V (220K) | B | 68.7/23.4 |
| R684 | 7030003640 | S.RES ERJ3GEYJ 473 V (47K) | B | 80.3/16.2 |
| R685 | 7030003520 | S.RES ERJ3GEYJ 472 V (4.7K) | B | 152.8/62.2 |
| R686 | 7030003520 | S.RES ERJ3GEYJ 472 V (4.7K) | B | 152.8/59.6 |

Eqv.= This component is equivalent to the REF No. component listed above, and may be substituted on parts orders and repairs.

M.=Mounted side (T: Mounted on the Top side, B: Mounted on the Bottom side)
S.=Surface mount

## [LOGIC UNIT]

| REF NO. | PARTS NO. | DESCRIPTION | M. | H/V LOCATION |
|---|---|---|---|---|
| R687 | 7030003520 | S.RES ERJ3GEYJ 472 V (4.7K) | B | 152.1/53.6 |
| R688 | 7030003720 | S.RES ERJ3GEYJ 224 V (220K) | B | 68.7/24.7 |
| R689 | 7030003520 | S.RES ERJ3GEYJ 472 V (4.7K) | B | 153.0/56.2 |
| R690 | 7030003520 | S.RES ERJ3GEYJ 472 V (4.7K) | B | 153.0/54.9 |
| R691 | 7030003640 | S.RES ERJ3GEYJ 473 V (47K) | B | 66.1/32.0 |
| R701 | 7030003860 | S.RES ERJ3GE JPW V | T | 93.2/43.6 |
| R801 | 7030003560 | S.RES ERJ3GEYJ 103 V (10K) | T | 158.3/72.8 |
| R802 | 7030006210 | S.RES ERJ12YJ4R7U (4.7) | T | 162.4/71.2 |
| R803 | 7030003440 | S.RES ERJ3GEYJ 102 V (1K) | T | 159.6/72.8 |
| R804 | 7030006210 | S.RES ERJ12YJ4R7U (4.7) | T | 169.0/71.2 |
| R805 | 7030003440 | S.RES ERJ3GEYJ 102 V (1K) | T | 166.2/72.8 |
| R806 | 7030003560 | S.RES ERJ3GEYJ 103 V (10K) | T | 164.9/72.8 |
| R807 | 7030006210 | S.RES ERJ12YJ4R7U (4.7) | T | 175.6/71.2 |
| R808 | 7030003440 | S.RES ERJ3GEYJ 102 V (1K) | T | 173.0/72.8 |
| R809 | 7030003560 | S.RES ERJ3GEYJ 103 V (10K) | T | 171.7/72.8 |
| R810 | 7030003320 | S.RES ERJ3GEYJ 101 V (100) | B | 155.0/29.9 |
| R811 | 7030003320 | S.RES ERJ3GEYJ 101 V (100) | B | 155.0/27.6 |
| R812 | 7030010440 | S.RES ERJ1TYJ 680U (68) | B | 133.0/111.3 |
| R813 | 7030003560 | S.RES ERJ3GEYJ 103 V (10K) | B | 192.7/10.1 |
| R814 | 7030003440 | S.RES ERJ3GEYJ 102 V (1K) | T | 105.6/116.7 |
| R816 | 7030003560 | S.RES ERJ3GEYJ 103 V (10K) | T | 159.0/74.7 |
| R817 | 7030003560 | S.RES ERJ3GEYJ 103 V (10K) | T | 161.6/74.7 |
| R818 | 7030000140 | S.RES MCR10EZHJ 10 (100) | T | 155.6/78.3 |
| R819 | 7030007190 | S.RES ERJ12YJ220U (22) | T | 135.5/111.1 |
| R821 | 7030003370 | S.RES ERJ3GEYJ 271 V (270) | B | 15.4/100.0 |
| R822 | 7030009720 | S.RES ERJ12YJ102U (1K) | T | 20.0/103.2 |
| R823 | 7030003810 | S.RES ERJ3GEYJ 125 V (1.2M) | B | 16.9/109.5 |
| R824 | 7030003810 | S.RES ERJ3GEYJ 125 V (1.2M) | B | 13.5/107.2 |
| R825 | 7030008170 | S.RES ERJ12YJ1R0U (1) | B | 37.1/112.2 |
| R826 | 7030003610 | S.RES ERJ3GEYJ 273 V (27K) | B | 16.9/110.8 |
| R827 | 7030003610 | S.RES ERJ3GEYJ 273 V (27K) | B | 13.5/110.0 |
| R828 | 7030003560 | S.RES ERJ3GEYJ 103 V (10K) | B | 25.4/101.6 |
| R829 | 7030000340 | S.RES MCR10EZHJ 470 (471) | B | 20.7/104.6 |
| R830 | 7030003600 | S.RES ERJ3GEYJ 223 V (22K) | B | 18.6/100.0 |
| R832 | 7030003600 | S.RES ERJ3GEYJ 223 V (22K) | B | 18.6/98.7 |
| R833 | 7030003560 | S.RES ERJ3GEYJ 103 V (10K) | B | 18.6/97.4 |
| R850 | 7030003860 | S.RES ERJ3GE JPW V | B | 182.5/50.2 |
| R851 | 7030003680 | S.RES ERJ3GEYJ 104 V (100K) | B | 187.1/62.0 |
| R852 | 7030003680 | S.RES ERJ3GEYJ 104 V (100K) | B | 185.1/62.0 |
| R853 | 7030003770 | S.RES ERJ3GEYJ 564 V (560K) | B | 183.8/62.0 |
| R854 | 7030003770 | S.RES ERJ3GEYJ 564 V (560K) | B | 188.4/62.0 |
| R855 | 7030003520 | S.RES ERJ3GEYJ 472 V (4.7K) | B | 191.5/62.0 |
| R856 | 7030003520 | S.RES ERJ3GEYJ 472 V (4.7K) | B | 180.7/61.9 |
| R857 | 7030003560 | S.RES ERJ3GEYJ 103 V (10K) | B | 144.8/14.2 |
| R858 | 7030003460 | S.RES ERJ3GEYJ 152 V (1.5K) | B | 144.8/12.9 |
| R859 | 7030003470 | S.RES ERJ3GEYJ 182 V (1.8K) | B | 142.2/12.9 |
| R860 | 7030003500 | S.RES ERJ3GEYJ 332 V (3.3K) | B | 144.8/15.5 |
| R861 | 7030003480 | S.RES ERJ3GEYJ 222 V (2.2K) | B | 141.4/15.0 |
| R862 | 7030003380 | S.RES ERJ3GEYJ 331 V (330) | B | 147.7/3.8 |
| R863 | 7030003560 | S.RES ERJ3GEYJ 103 V (10K) | B | 134.6/21.1 |
| R864 | 7030003460 | S.RES ERJ3GEYJ 152 V (1.5K) | B | 134.6/19.8 |
| R865 | 7030003470 | S.RES ERJ3GEYJ 182 V (1.8K) | B | 134.6/18.5 |
| R866 | 7030003500 | S.RES ERJ3GEYJ 332 V (3.3K) | B | 131.8/17.2 |
| R867 | 7030003480 | S.RES ERJ3GEYJ 222 V (2.2K) | B | 131.8/18.5 |
| R868 | 7030003380 | S.RES ERJ3GEYJ 331 V (330) | B | 134.1/3.9 |
| R869 | 7030003560 | S.RES ERJ3GEYJ 103 V (10K) | B | 114.1/30.0 |
| R870 | 7030003560 | S.RES ERJ3GEYJ 103 V (10K) | B | 144.7/7.3 |
| R871 | 7030003460 | S.RES ERJ3GEYJ 152 V (1.5K) | B | 143.4/7.3 |
| R872 | 7030003470 | S.RES ERJ3GEYJ 182 V (1.8K) | B | 142.1/7.3 |
| R873 | 7030003500 | S.RES ERJ3GEYJ 332 V (3.3K) | B | 138.2/7.3 |
| R874 | 7030003480 | S.RES ERJ3GEYJ 222 V (2.2K) | B | 139.5/7.3 |
| R875 | 7030003380 | S.RES ERJ3GEYJ 331 V (330) | B | 140.9/3.8 |
| R876 | 7030003410 | S.RES ERJ3GEYJ 561 V (560) | B | 120.5/14.9 |
| R877 | 7030003700 | S.RES ERJ3GEYJ 154 V (150K) | B | 120.5/13.6 |
| R878 | 7030003520 | S.RES ERJ3GEYJ 472 V (4.7K) | B | 120.5/12.3 |
| R879 | 7030003550 | S.RES ERJ3GEYJ 822 V (8.2K) | B | 117.9/4.2 |
| R880 | 7030003690 | S.RES ERJ3GEYJ 124 V (120K) | B | 119.8/5.0 |
| R881 | 7030003520 | S.RES ERJ3GEYJ 472 V (4.7K) | B | 122.4/5.0 |
| R882 | 7030003410 | S.RES ERJ3GEYJ 561 V (560) | B | 109.0/16.0 |
| R883 | 7030003550 | S.RES ERJ3GEYJ 822 V (8.2K) | B | 109.0/14.7 |
| R884 | 7030003520 | S.RES ERJ3GEYJ 472 V (4.7K) | B | 109.0/13.4 |
| R885 | 7030003410 | S.RES ERJ3GEYJ 561 V (560) | B | 109.0/4.2 |
| R886 | 7030003550 | S.RES ERJ3GEYJ 822 V (8.2K) | B | 109.7/6.2 |
| R887 | 7030003520 | S.RES ERJ3GEYJ 472 V (4.7K) | B | 108.4/6.2 |
| R888 | 7030003360 | S.RES ERJ3GEYJ 221 V (220) | B | 181.7/48.0 |
| R889 | 7030003640 | S.RES ERJ3GEYJ 473 V (47K) | B | 184.5/48.4 |
| R890 | 7030003360 | S.RES ERJ3GEYJ 221 V (220) | B | 191.0/47.9 |
| R891 | 7030003560 | S.RES ERJ3GEYJ 103 V (10K) | B | 188.2/48.4 |
| R892 | 7030003730 | S.RES ERJ3GEYJ 274 V (270K) | B | 190.3/50.2 |
| R893 | 7030003680 | S.RES ERJ3GEYJ 104 V (100K) | B | 183.8/50.2 |
| R894 | 7030003200 | S.RES ERJ3GEYJ 100 V (10) | B | 193.2/55.7 |
| R895 | 7030003680 | S.RES ERJ3GEYJ 104 V (100K) | B | 189.0/50.2 |
| R896 | 7030003200 | S.RES ERJ3GEYJ 100 V (10) | B | 192.9/52.9 |
| R901 | 7030003200 | S.RES ERJ3GEYJ 100 V (10) | T | 165.7/37.8 |
| R902 | 7030003200 | S.RES ERJ3GEYJ 100 V (10) | T | 166.1/30.9 |
| R903 | 7030003200 | S.RES ERJ3GEYJ 100 V (10) | T | 166.6/40.4 |
| R904 | 7030003200 | S.RES ERJ3GEYJ 100 V (10) | T | 167.1/28.3 |
| R905 | 7030003200 | S.RES ERJ3GEYJ 100 V (10) | T | 167.6/37.8 |
| R906 | 7030003200 | S.RES ERJ3GEYJ 100 V (10) | T | 168.1/30.9 |
| R907 | 7030003200 | S.RES ERJ3GEYJ 100 V (10) | T | 168.6/40.4 |
| R908 | 7030003200 | S.RES ERJ3GEYJ 100 V (10) | T | 169.1/28.3 |
| R909 | 7030003200 | S.RES ERJ3GEYJ 100 V (10) | T | 169.6/37.8 |
| R910 | 7030003200 | S.RES ERJ3GEYJ 100 V (10) | T | 170.1/30.9 |
| R911 | 7030003200 | S.RES ERJ3GEYJ 100 V (10) | T | 170.6/40.4 |
| R912 | 7030003200 | S.RES ERJ3GEYJ 100 V (10) | T | 171.6/37.8 |
| R913 | 7030003200 | S.RES ERJ3GEYJ 100 V (10) | T | 172.1/30.9 |
| R914 | 7030003200 | S.RES ERJ3GEYJ 100 V (10) | T | 172.6/40.3 |
| R915 | 7030003200 | S.RES ERJ3GEYJ 100 V (10) | T | 173.1/28.3 |
| R916 | 7030003200 | S.RES ERJ3GEYJ 100 V (10) | T | 173.6/37.8 |
| R917 | 7030003200 | S.RES ERJ3GEYJ 100 V (10) | T | 174.1/30.9 |
| R918 | 7030003200 | S.RES ERJ3GEYJ 100 V (10) | T | 174.6/40.3 |
| R919 | 7030003200 | S.RES ERJ3GEYJ 100 V (10) | T | 175.1/28.3 |
| R920 | 7030003200 | S.RES ERJ3GEYJ 100 V (10) | T | 175.6/37.8 |
| R921 | 7030003200 | S.RES ERJ3GEYJ 100 V (10) | T | 176.1/30.9 |
| R922 | 7030003200 | S.RES ERJ3GEYJ 100 V (10) | T | 176.6/40.3 |

## [LOGIC UNIT]

| REF NO. | PARTS NO. | DESCRIPTION | M. | H/V LOCATION |
|---|---|---|---|---|
| R923 | 7030003200 | S.RES ERJ3GEYJ 100 V (10) | T | 177.1/28.3 |
| R924 | 7030003200 | S.RES ERJ3GEYJ 100 V (10) | T | 177.6/37.8 |
| R925 | 7030003200 | S.RES ERJ3GEYJ 100 V (10) | T | 178.1/30.9 |
| R926 | 7030003200 | S.RES ERJ3GEYJ 100 V (10) | T | 178.6/40.3 |
| R927 | 7030003200 | S.RES ERJ3GEYJ 100 V (10) | T | 179.1/28.3 |
| R928 | 7030003200 | S.RES ERJ3GEYJ 100 V (10) | T | 179.6/37.8 |
| R929 | 7030003200 | S.RES ERJ3GEYJ 100 V (10) | T | 180.1/30.9 |
| R930 | 7030003200 | S.RES ERJ3GEYJ 100 V (10) | T | 180.6/40.3 |
| R931 | 7030003200 | S.RES ERJ3GEYJ 100 V (10) | T | 181.1/28.3 |
| R932 | 7030003200 | S.RES ERJ3GEYJ 100 V (10) | T | 182.1/30.9 |
| R933 | 7030003200 | S.RES ERJ3GEYJ 100 V (10) | T | 182.6/40.3 |
| R934 | 7030003200 | S.RES ERJ3GEYJ 100 V (10) | T | 183.1/28.3 |
| R935 | 7030003200 | S.RES ERJ3GEYJ 100 V (10) | T | 183.6/37.8 |
| R936 | 7030003200 | S.RES ERJ3GEYJ 100 V (10) | T | 184.1/30.9 |
| R937 | 7030003200 | S.RES ERJ3GEYJ 100 V (10) | T | 185.1/28.3 |
| R938 | 7030003200 | S.RES ERJ3GEYJ 100 V (10) | T | 133.1/37.8 |
| R939 | 7030003200 | S.RES ERJ3GEYJ 100 V (10) | T | 134.2/30.9 |
| R940 | 7030003200 | S.RES ERJ3GEYJ 100 V (10) | T | 134.4/37.8 |
| R941 | 7030003200 | S.RES ERJ3GEYJ 100 V (10) | T | 135.2/28.3 |
| R942 | 7030003200 | S.RES ERJ3GEYJ 100 V (10) | T | 135.7/37.8 |
| R943 | 7030003200 | S.RES ERJ3GEYJ 100 V (10) | T | 136.2/30.9 |
| R944 | 7030003200 | S.RES ERJ3GEYJ 100 V (10) | T | 136.7/40.4 |
| R945 | 7030003200 | S.RES ERJ3GEYJ 100 V (10) | T | 137.2/28.3 |
| R946 | 7030003200 | S.RES ERJ3GEYJ 100 V (10) | T | 137.7/37.8 |
| R947 | 7030003200 | S.RES ERJ3GEYJ 100 V (10) | T | 138.2/30.9 |
| R949 | 7030003200 | S.RES ERJ3GEYJ 100 V (10) | T | 139.2/28.3 |
| R950 | 7030003200 | S.RES ERJ3GEYJ 100 V (10) | T | 139.7/37.8 |
| R951 | 7030003200 | S.RES ERJ3GEYJ 100 V (10) | T | 140.2/30.9 |
| R952 | 7030003200 | S.RES ERJ3GEYJ 100 V (10) | T | 140.7/40.4 |
| R953 | 7030003200 | S.RES ERJ3GEYJ 100 V (10) | T | 141.2/28.3 |
| R954 | 7030003200 | S.RES ERJ3GEYJ 100 V (10) | T | 141.7/37.8 |
| R955 | 7030003200 | S.RES ERJ3GEYJ 100 V (10) | T | 142.2/30.9 |
| R956 | 7030003200 | S.RES ERJ3GEYJ 100 V (10) | T | 142.7/40.4 |
| R957 | 7030003200 | S.RES ERJ3GEYJ 100 V (10) | T | 143.2/28.3 |
| R958 | 7030003200 | S.RES ERJ3GEYJ 100 V (10) | T | 143.7/37.8 |
| R959 | 7030003200 | S.RES ERJ3GEYJ 100 V (10) | T | 144.2/30.9 |
| R960 | 7030003200 | S.RES ERJ3GEYJ 100 V (10) | T | 144.7/40.4 |
| R961 | 7030003200 | S.RES ERJ3GEYJ 100 V (10) | T | 145.7/37.8 |
| R962 | 7030003200 | S.RES ERJ3GEYJ 100 V (10) | T | 146.2/30.9 |
| R963 | 7030003200 | S.RES ERJ3GEYJ 100 V (10) | T | 146.7/40.4 |
| R964 | 7030003200 | S.RES ERJ3GEYJ 100 V (10) | T | 147.2/28.3 |
| R965 | 7030003200 | S.RES ERJ3GEYJ 100 V (10) | T | 147.7/37.8 |
| R966 | 7030003200 | S.RES ERJ3GEYJ 100 V (10) | T | 148.2/30.8 |
| R967 | 7030003200 | S.RES ERJ3GEYJ 100 V (10) | T | 148.7/40.4 |
| R968 | 7030003200 | S.RES ERJ3GEYJ 100 V (10) | T | 149.7/37.8 |
| R969 | 7030003200 | S.RES ERJ3GEYJ 100 V (10) | T | 150.2/28.3 |
| R970 | 7030003200 | S.RES ERJ3GEYJ 100 V (10) | T | 150.7/40.4 |
| R971 | 7030003200 | S.RES ERJ3GEYJ 100 V (10) | T | 151.2/30.8 |
| R974 | 7030003200 | S.RES ERJ3GEYJ 100 V (10) | T | 153.2/30.8 |
| R975 | 7030003200 | S.RES ERJ3GEYJ 100 V (10) | B | 214.5/83.4 |
| R976 | 7030003200 | S.RES ERJ3GEYJ 100 V (10) | B | 220.7/83.0 |
| R977 | 7030003200 | S.RES ERJ3GEYJ 100 V (10) | B | 214.5/86.0 |
| R978 | 7030003200 | S.RES ERJ3GEYJ 100 V (10) | B | 220.7/87.0 |
| R979 | 7030003200 | S.RES ERJ3GEYJ 100 V (10) | B | 214.5/88.0 |
| R980 | 7030003200 | S.RES ERJ3GEYJ 100 V (10) | B | 220.7/89.0 |
| R981 | 7030003200 | S.RES ERJ3GEYJ 100 V (10) | B | 220.7/91.0 |
| R982 | 7030003200 | S.RES ERJ3GEYJ 100 V (10) | B | 220.7/93.0 |
| R983 | 7030003200 | S.RES ERJ3GEYJ 100 V (10) | B | 214.5/94.0 |
| R984 | 7030003200 | S.RES ERJ3GEYJ 100 V (10) | B | 12.3/115.8 |
| R985 | 7030003200 | S.RES ERJ3GEYJ 100 V (10) | B | 13.6/115.8 |
| R986 | 7030003200 | S.RES ERJ3GEYJ 100 V (10) | B | 14.9/115.8 |
| R987 | 7030003200 | S.RES ERJ3GEYJ 100 V (10) | B | 16.2/115.8 |
| R988 | 7030003200 | S.RES ERJ3GEYJ 100 V (10) | B | 17.5/115.8 |
| R989 | 7030003200 | S.RES ERJ3GEYJ 100 V (10) | T | 181.6/37.8 |
| R990 | 7030003440 | S.RES ERJ3GEYJ 102 V (1K) | B | 182.5/92.2 |
| R991 | 7030003440 | S.RES ERJ3GEYJ 102 V (1K) | B | 183.5/83.6 |
| R992 | 7030003440 | S.RES ERJ3GEYJ 102 V (1K) | B | 184.5/92.2 |
| R993 | 7030003440 | S.RES ERJ3GEYJ 102 V (1K) | B | 185.5/83.6 |
| R994 | 7030003440 | S.RES ERJ3GEYJ 102 V (1K) | B | 186.5/92.2 |
| R995 | 7030003440 | S.RES ERJ3GEYJ 102 V (1K) | B | 187.5/83.6 |
| R996 | 7030003200 | S.RES ERJ3GEYJ 100 V (10) | B | 220.7/95.6 |
| R998 | 7030003440 | S.RES ERJ3GEYJ 102 V (1K) | B | 190.5/92.2 |
| R999 | 7030003440 | S.RES ERJ3GEYJ 102 V (1K) | B | 191.5/83.6 |
| R1000 | 7030003440 | S.RES ERJ3GEYJ 102 V (1K) | B | 192.5/92.2 |
| R1003 | 7030003200 | S.RES ERJ3GEYJ 100 V (10) | B | 231.4/83.0 |
| R1004 | 7030003200 | S.RES ERJ3GEYJ 100 V (10) | B | 225.9/82.8 |
| R1005 | 7030003200 | S.RES ERJ3GEYJ 100 V (10) | B | 231.4/81.0 |
| R1006 | 7030003200 | S.RES ERJ3GEYJ 100 V (10) | B | 222.8/80.0 |
| R1007 | 7030003200 | S.RES ERJ3GEYJ 100 V (10) | B | 231.4/79.0 |
| R1008 | 7030003200 | S.RES ERJ3GEYJ 100 V (10) | B | 222.8/48.5 |
| R1009 | 7030003200 | S.RES ERJ3GEYJ 100 V (10) | B | 231.4/49.5 |
| R1010 | 7030003200 | S.RES ERJ3GEYJ 100 V (10) | B | 222.8/52.5 |
| R1011 | 7030003200 | S.RES ERJ3GEYJ 100 V (10) | B | 231.4/53.5 |
| R1012 | 7030003200 | S.RES ERJ3GEYJ 100 V (10) | B | 222.8/56.5 |
| R1013 | 7030003200 | S.RES ERJ3GEYJ 100 V (10) | B | 231.4/57.5 |
| R1014 | 7030003200 | S.RES ERJ3GEYJ 100 V (10) | B | 222.8/58.5 |
| R1015 | 7030003200 | S.RES ERJ3GEYJ 100 V (10) | B | 231.4/59.5 |
| R1016 | 7030003200 | S.RES ERJ3GEYJ 100 V (10) | T | 181.0/22.1 |
| R1017 | 7030003200 | S.RES ERJ3GEYJ 100 V (10) | T | 179.7/22.1 |
| R1018 | 7030003200 | S.RES ERJ3GEYJ 100 V (10) | T | 176.7/22.1 |
| R1019 | 7030003200 | S.RES ERJ3GEYJ 100 V (10) | T | 174.8/22.2 |
| R1020 | 7030003200 | S.RES ERJ3GEYJ 100 V (10) | T | 173.5/22.2 |
| R1021 | 7030003200 | S.RES ERJ3GEYJ 100 V (10) | T | 172.2/22.2 |
| R1022 | 7030003200 | S.RES ERJ3GEYJ 100 V (10) | T | 170.8/22.2 |
| R1023 | 7030003200 | S.RES ERJ3GEYJ 100 V (10) | T | 169.5/22.2 |
| R1024 | 7030003200 | S.RES ERJ3GEYJ 100 V (10) | B | 220.8/85.0 |
| R1025 | 7030003320 | S.RES ERJ3GEYJ 101 V (100) | B | 120.5/9.7 |
| R1026 | 7030003320 | S.RES ERJ3GEYJ 101 V (100) | B | 109.0/8.2 |
| R1027 | 7030003320 | S.RES ERJ3GEYJ 101 V (100) | B | 137.4/17.2 |
| R1028 | 7030003320 | S.RES ERJ3GEYJ 101 V (100) | B | 135.6/7.3 |
| R1029 | 7030003520 | S.RES ERJ3GEYJ 472 V (4.7K) | B | 120.5/11.0 |
| R1030 | 7030003520 | S.RES ERJ3GEYJ 472 V (4.7K) | B | 120.5/7.1 |
| R1031 | 7030003520 | S.RES ERJ3GEYJ 472 V (4.7K) | B | 109.0/12.1 |
| R1032 | 7030003520 | S.RES ERJ3GEYJ 472 V (4.7K) | B | 109.0/9.5 |
| R1033 | 7030003860 | S.RES ERJ3GE JPW V | T | 189.0/62.5 |

Eqv.= This component is equivalent to the REF No. component listed above, and may be substituted on parts orders and repairs.

M.=Mounted side (T: Mounted on the Top side, B: Mounted on the Bottom side)
S.=Surface mount

## [LOGIC UNIT]

| REF NO. | PARTS NO. | DESCRIPTION | M. | H/V LOCATION |
|---|---|---|---|---|
| R1035 | 7030003540 | S.RES ERJ3GEYJ 682 V (6.8K) | B | 192.3/60.1 |
| R1036 | 7030003540 | S.RES ERJ3GEYJ 682 V (6.8K) | B | 184.5/64.8 |
| R1041 | 7030003520 | S.RES ERJ3GEYJ 472 V (4.7K) | B | 173.8/28.3 |
| R1042 | 7030003550 | S.RES ERJ3GEYJ 822 V (8.2K) | T | 115.2/16.7 |
| R1052 | 7030008240 | S.RES ERJ12Y0R00U | T | 86.1/114.4 |
| R1053 | 7030008240 | S.RES ERJ12Y0R00U | T | 67.5/114.4 |
| R1054 | 7030008240 | S.RES ERJ12Y0R00U | T | 9.4/116.8 |
| R1056 | 7030003860 | S.RES ERJ3GE JPW V | T | 138.7/40.3 |
| R1057 | 7030003860 | S.RES ERJ3GE JPW V | B | 123.1/7.2 |
| R1101 | 7030003280 | S.RES ERJ3GEYJ 470 V (47) | T | 18.7/30.5 |
| R1102 | 7030003280 | S.RES ERJ3GEYJ 470 V (47) | T | 18.7/33.1 |
| R1103 | 7030003280 | S.RES ERJ3GEYJ 470 V (47) | T | 18.7/35.7 |
| R1104 | 7030003280 | S.RES ERJ3GEYJ 470 V (47) | T | 20.5/30.5 |
| R1105 | 7030003280 | S.RES ERJ3GEYJ 470 V (47) | T | 20.5/33.1 |
| R1106 | 7030003280 | S.RES ERJ3GEYJ 470 V (47) | T | 20.5/35.7 |
| R1107 | 7030003280 | S.RES ERJ3GEYJ 470 V (47) | T | 22.3/30.5 |
| R1108 | 7030003280 | S.RES ERJ3GEYJ 470 V (47) | T | 22.3/33.1 |
| R1109 | 7030003280 | S.RES ERJ3GEYJ 470 V (47) | T | 22.3/35.7 |
| R1110 | 7030003280 | S.RES ERJ3GEYJ 470 V (47) | T | 24.1/27.9 |
| R1111 | 7030003280 | S.RES ERJ3GEYJ 470 V (47) | T | 24.1/30.5 |
| R1112 | 7030003280 | S.RES ERJ3GEYJ 470 V (47) | T | 24.1/33.1 |
| R1113 | 7030003280 | S.RES ERJ3GEYJ 470 V (47) | T | 25.9/27.9 |
| R1114 | 7030003280 | S.RES ERJ3GEYJ 470 V (47) | T | 25.9/30.5 |
| R1115 | 7030003280 | S.RES ERJ3GEYJ 470 V (47) | T | 25.9/33.1 |
| R1116 | 7030003280 | S.RES ERJ3GEYJ 470 V (47) | T | 27.3/30.5 |
| R1117 | 7030003280 | S.RES ERJ3GEYJ 470 V (47) | T | 28.6/30.5 |
| R1118 | 7030003280 | S.RES ERJ3GEYJ 470 V (47) | T | 29.9/30.5 |
| R1119 | 7030003280 | S.RES ERJ3GEYJ 470 V (47) | T | 31.2/30.5 |
| R1120 | 7030003280 | S.RES ERJ3GEYJ 470 V (47) | T | 32.5/30.5 |
| R1121 | 7030003280 | S.RES ERJ3GEYJ 470 V (47) | T | 33.8/30.5 |
| R1122 | 7030003280 | S.RES ERJ3GEYJ 470 V (47) | T | 35.1/30.5 |
| R1123 | 7030003280 | S.RES ERJ3GEYJ 470 V (47) | T | 40.5/29.6 |
| R1124 | 7030003280 | S.RES ERJ3GEYJ 470 V (47) | T | 42.8/34.8 |
| R1125 | 7030003280 | S.RES ERJ3GEYJ 470 V (47) | T | 43.5/32.2 |
| R1126 | 7030003280 | S.RES ERJ3GEYJ 470 V (47) | T | 44.2/34.8 |
| R1127 | 7030003280 | S.RES ERJ3GEYJ 470 V (47) | T | 44.9/32.2 |
| R1128 | 7030003280 | S.RES ERJ3GEYJ 470 V (47) | T | 45.6/34.8 |
| R1129 | 7030003280 | S.RES ERJ3GEYJ 470 V (47) | T | 46.3/32.2 |
| R1130 | 7030003280 | S.RES ERJ3GEYJ 470 V (47) | T | 47.0/34.8 |
| R1131 | 7030003280 | S.RES ERJ3GEYJ 470 V (47) | T | 47.7/32.2 |
| R1132 | 7030003280 | S.RES ERJ3GEYJ 470 V (47) | T | 48.4/34.8 |
| R1133 | 7030003280 | S.RES ERJ3GEYJ 470 V (47) | T | 49.1/32.2 |
| R1134 | 7030003280 | S.RES ERJ3GEYJ 470 V (47) | T | 49.8/34.8 |
| R1135 | 7030003280 | S.RES ERJ3GEYJ 470 V (47) | T | 50.5/32.2 |
| R1136 | 7030003280 | S.RES ERJ3GEYJ 470 V (47) | T | 51.2/34.8 |
| R1137 | 7030003280 | S.RES ERJ3GEYJ 470 V (47) | T | 51.9/32.2 |
| R1138 | 7030003280 | S.RES ERJ3GEYJ 470 V (47) | T | 52.6/34.8 |
| R1139 | 7030003280 | S.RES ERJ3GEYJ 470 V (47) | T | 53.3/32.2 |
| R1140 | 7030003280 | S.RES ERJ3GEYJ 470 V (47) | T | 54.0/34.8 |
| R1141 | 7030003280 | S.RES ERJ3GEYJ 470 V (47) | T | 54.7/32.2 |
| R1142 | 7030003280 | S.RES ERJ3GEYJ 470 V (47) | T | 55.4/34.8 |
| R1143 | 7030003280 | S.RES ERJ3GEYJ 470 V (47) | T | 56.1/32.2 |
| R1144 | 7030003280 | S.RES ERJ3GEYJ 470 V (47) | T | 56.8/34.8 |
| R1145 | 7030003280 | S.RES ERJ3GEYJ 470 V (47) | T | 57.5/32.2 |
| R1146 | 7030003280 | S.RES ERJ3GEYJ 470 V (47) | T | 58.2/34.8 |
| R1151 | 7030003290 | S.RES ERJ3GEYJ 560 V (56) | T | 205.2/11.8 |
| R1152 | 7030003320 | S.RES ERJ3GEYJ 101 V (100) | T | 203.7/11.8 |
| R1153 | 7030003320 | S.RES ERJ3GEYJ 101 V (100) | T | 200.9/13.2 |
| R1154 | 7030003320 | S.RES ERJ3GEYJ 101 V (100) | T | 199.6/13.2 |
| R1155 | 7030003320 | S.RES ERJ3GEYJ 101 V (100) | B | 201.4/10.9 |
| R1156 | 7030003320 | S.RES ERJ3GEYJ 101 V (100) | T | 198.3/13.2 |
| R1157 | 7030003320 | S.RES ERJ3GEYJ 101 V (100) | B | 200.1/10.9 |
| R1158 | 7030003320 | S.RES ERJ3GEYJ 101 V (100) | T | 197.0/13.2 |
| R1159 | 7030003320 | S.RES ERJ3GEYJ 101 V (100) | B | 198.0/10.9 |
| R1160 | 7030003320 | S.RES ERJ3GEYJ 101 V (100) | T | 195.7/13.2 |
| R1161 | 7030003320 | S.RES ERJ3GEYJ 101 V (100) | B | 197.5/10.9 |
| R1162 | 7030003320 | S.RES ERJ3GEYJ 101 V (100) | B | 196.2/10.9 |
| R1163 | 7030003320 | S.RES ERJ3GEYJ 101 V (100) | T | 194.4/13.2 |
| R1164 | 7030003320 | S.RES ERJ3GEYJ 101 V (100) | T | 193.1/13.2 |
| R1165 | 7030003320 | S.RES ERJ3GEYJ 101 V (100) | T | 191.1/14.9 |
| R1166 | 7030003320 | S.RES ERJ3GEYJ 101 V (100) | T | 189.8/14.9 |
| R1167 | 7030003320 | S.RES ERJ3GEYJ 101 V (100) | T | 188.5/14.9 |
| R1168 | 7030003320 | S.RES ERJ3GEYJ 101 V (100) | T | 187.2/14.9 |
| R1169 | 7030003320 | S.RES ERJ3GEYJ 101 V (100) | T | 185.9/14.9 |
| R1170 | 7030003320 | S.RES ERJ3GEYJ 101 V (100) | T | 181.5/9.5 |
| | | | | |
| C1 | 4030011600 | S.CER C1608 JB 1E 104K-T | B | 69.7/83.3 |
| C2 | 4030011600 | S.CER C1608 JB 1E 104K-T | B | 68.1/83.3 |
| C3 | 4030011600 | S.CER C1608 JB 1E 104K-T | B | 63.3/83.3 |
| C4 | 4030011600 | S.CER C1608 JB 1E 104K-T | B | 59.3/83.3 |
| C5 | 4030011600 | S.CER C1608 JB 1E 104K-T | B | 48.9/83.3 |
| C6 | 4030011600 | S.CER C1608 JB 1E 104K-T | B | 66.9/100.4 |
| C7 | 4030011600 | S.CER C1608 JB 1E 104K-T | B | 62.1/100.4 |
| C8 | 4030011600 | S.CER C1608 JB 1E 104K-T | T | 69.7/107.5 |
| C9 | 4030011600 | S.CER C1608 JB 1E 104K-T | T | 68.1/107.5 |
| C10 | 4030011600 | S.CER C1608 JB 1E 104K-T | T | 63.3/107.5 |
| C11 | 4030011600 | S.CER C1608 JB 1E 104K-T | T | 59.3/107.5 |
| C12 | 4030011600 | S.CER C1608 JB 1E 104K-T | T | 48.9/107.5 |
| C13 | 4030011600 | S.CER C1608 JB 1E 104K-T | T | 66.6/90.9 |
| C14 | 4030011600 | S.CER C1608 JB 1E 104K-T | T | 61.9/90.9 |
| C51 | 4030011600 | S.CER C1608 JB 1E 104K-T | B | 105.5/54.7 |
| C52 | 4030011600 | S.CER C1608 JB 1E 104K-T | B | 97.1/46.1 |
| C53 | 4030011600 | S.CER C1608 JB 1E 104K-T | B | 94.4/46.1 |
| C54 | 4030011600 | S.CER C1608 JB 1E 104K-T | B | 106.6/51.0 |
| C55 | 4030011600 | S.CER C1608 JB 1E 104K-T | B | 109.0/65.9 |
| C56 | 4030011600 | S.CER C1608 JB 1E 104K-T | B | 114.0/65.9 |
| C57 | 4030011600 | S.CER C1608 JB 1E 104K-T | B | 127.7/63.2 |
| C58 | 4030011600 | S.CER C1608 JB 1E 104K-T | B | 127.8/56.0 |
| C59 | 4030011600 | S.CER C1608 JB 1E 104K-T | B | 117.5/46.1 |
| C60 | 4030011600 | S.CER C1608 JB 1E 104K-T | B | 111.6/46.1 |
| C61 | 4030009990 | S.CER C1608 CH 1H 200J-T | T | 143.1/78.1 |
| C62 | 4030011600 | S.CER C1608 JB 1E 104K-T | T | 140.0/100.7 |
| C63 | 4030008890 | S.CER C1608 JB 1H 273K-T | T | 144.6/100.7 |
| C64 | 4030011600 | S.CER C1608 JB 1E 104K-T | T | 146.7/102.6 |

## [LOGIC UNIT]

| REF NO. | PARTS NO. | DESCRIPTION | M. | H/V LOCATION |
|---|---|---|---|---|
| C65 | 4030011600 | S.CER C1608 JB 1E 104K-T | T | 96.1/34.3 |
| C66 | 4030011600 | S.CER C1608 JB 1E 104K-T | B | 34.1/27.5 |
| C101 | 4030011600 | S.CER C1608 JB 1E 104K-T | T | 23.4/71.9 |
| C102 | 4030011600 | S.CER C1608 JB 1E 104K-T | B | 43.3/48.2 |
| C103 | 4030011600 | S.CER C1608 JB 1E 104K-T | B | 47.2/78.1 |
| C104 | 4030011600 | S.CER C1608 JB 1E 104K-T | B | 46.9/58.8 |
| C105 | 4030011600 | S.CER C1608 JB 1E 104K-T | B | 49.5/71.0 |
| C106 | 4030011600 | S.CER C1608 JB 1E 104K-T | B | 46.9/57.5 |
| C107 | 4030011600 | S.CER C1608 JB 1E 104K-T | B | 52.1/57.5 |
| C108 | 4030011600 | S.CER C1608 JB 1E 104K-T | B | 57.8/57.5 |
| C109 | 4030011600 | S.CER C1608 JB 1E 104K-T | B | 59.6/60.9 |
| C110 | 4030011600 | S.CER C1608 JB 1E 104K-T | B | 46.9/68.0 |
| C111 | 4550007520 | S.TAN F931A106MAABMA | B | 57.8/48.8 |
| C112 | 4030011600 | S.CER C1608 JB 1E 104K-T | B | 59.0/50.5 |
| C113 | 4550007520 | S.TAN F931A106MAABMA | B | 63.6/48.8 |
| C114 | 4030011600 | S.CER C1608 JB 1E 104K-T | B | 62.1/50.5 |
| C115 | 4550007520 | S.TAN F931A106MAABMA | B | 68.9/48.8 |
| C116 | 4030011600 | S.CER C1608 JB 1E 104K-T | B | 65.0/50.5 |
| C117 | 4030011600 | S.CER C1608 JB 1E 104K-T | B | 46.9/71.0 |
| C118 | 4030011600 | S.CER C1608 JB 1E 104K-T | B | 46.9/61.4 |
| C119 | 4030011600 | S.CER C1608 JB 1E 104K-T | B | 46.9/69.4 |
| C120 | 4030011600 | S.CER C1608 JB 1E 104K-T | B | 59.6/69.4 |
| C121 | 4030011600 | S.CER C1608 JB 1E 104K-T | B | 57.9/70.3 |
| C122 | 4030011600 | S.CER C1608 JB 1E 104K-T | B | 56.6/70.3 |
| C123 | 4030006860 | S.CER C1608 JB 1H 102K-T | B | 57.3/78.1 |
| C124 | 4030011600 | S.CER C1608 JB 1E 104K-T | B | 52.1/71.0 |
| C125 | 4030011600 | S.CER C1608 JB 1E 104K-T | B | 54.7/71.0 |
| C126 | 4030011600 | S.CER C1608 JB 1E 104K-T | B | 46.9/66.7 |
| C127 | 4030011600 | S.CER C1608 JB 1E 104K-T | B | 43.3/50.8 |
| C128 | 4030011600 | S.CER C1608 JB 1E 104K-T | B | 52.3/50.8 |
| C129 | 4030011600 | S.CER C1608 JB 1E 104K-T | B | 46.1/64.9 |
| C130 | 4030011600 | S.CER C1608 JB 1E 104K-T | B | 59.6/66.8 |
| C131 | 4030011600 | S.CER C1608 JB 1E 104K-T | B | 66.5/68.7 |
| C132 | 4030011600 | S.CER C1608 JB 1E 104K-T | B | 59.6/63.7 |
| C133 | 4030011600 | S.CER C1608 JB 1E 104K-T | B | 47.2/51.0 |
| C134 | 4030011600 | S.CER C1608 JB 1E 104K-T | B | 39.3/58.7 |
| C135 | 4030011600 | S.CER C1608 JB 1E 104K-T | B | 46.9/60.1 |
| C136 | 4030011600 | S.CER C1608 JB 1E 104K-T | B | 54.7/57.5 |
| C137 | 4030011600 | S.CER C1608 JB 1E 104K-T | B | 49.5/57.5 |
| C138 | 4030011600 | S.CER C1608 JB 1E 104K-T | B | 54.7/69.4 |
| C139 | 4030011600 | S.CER C1608 JB 1E 104K-T | B | 59.6/58.3 |
| C140 | 4030006900 | S.CER C1608 JB 1H 103K-T | B | 66.5/58.6 |
| C141 | 4030011600 | S.CER C1608 JB 1E 104K-T | T | 64.4/38.7 |
| C142 | 4030011600 | S.CER C1608 JB 1E 104K-T | T | 76.8/32.5 |
| C144 | 4030011600 | S.CER C1608 JB 1E 104K-T | T | 8.0/62.8 |
| C145 | 4030011600 | S.CER C1608 JB 1E 104K-T | T | 10.0/62.2 |
| C146 | 4030007020 | S.CER C1608 CH 1H 120J-T | T | 8.2/58.8 |
| C147 | 4030007020 | S.CER C1608 CH 1H 120J-T | T | 10.0/59.6 |
| C148 | 4030011600 | S.CER C1608 JB 1E 104K-T | T | 6.8/70.6 |
| C149 | 4030011600 | S.CER C1608 JB 1E 104K-T | T | 7.5/73.7 |
| C201 | 4030011600 | S.CER C1608 JB 1E 104K-T | B | 118.2/103.3 |
| C202 | 4030011600 | S.CER C1608 JB 1E 104K-T | B | 120.8/103.3 |
| C203 | 4030011600 | S.CER C1608 JB 1E 104K-T | B | 124.3/103.3 |
| C204 | 4030011600 | S.CER C1608 JB 1E 104K-T | B | 127.4/103.3 |
| C205 | 4030011600 | S.CER C1608 JB 1E 104K-T | B | 137.4/103.5 |
| C206 | 4030011600 | S.CER C1608 JB 1E 104K-T | B | 120.8/87.7 |
| C207 | 4030011600 | S.CER C1608 JB 1E 104K-T | B | 125.6/87.7 |
| C208 | 4030011600 | S.CER C1608 JB 1E 104K-T | B | 117.8/85.8 |
| C209 | 4030011600 | S.CER C1608 JB 1E 104K-T | B | 119.3/85.8 |
| C210 | 4030011600 | S.CER C1608 JB 1E 104K-T | B | 124.1/85.8 |
| C211 | 4030011600 | S.CER C1608 JB 1E 104K-T | B | 128.1/85.8 |
| C212 | 4030011600 | S.CER C1608 JB 1E 104K-T | B | 138.5/85.8 |
| C213 | 4030011600 | S.CER C1608 JB 1E 104K-T | B | 120.7/70.0 |
| C214 | 4030011600 | S.CER C1608 JB 1E 104K-T | B | 124.2/70.1 |
| C215 | 4030011600 | S.CER C1608 JB 1E 104K-T | B | 89.4/90.4 |
| C216 | 4030011600 | S.CER C1608 JB 1E 104K-T | B | 85.6/71.6 |
| C217 | 4030011600 | S.CER C1608 JB 1E 104K-T | B | 91.6/79.7 |
| C218 | 4030011600 | S.CER C1608 JB 1E 104K-T | B | 92.1/72.6 |
| C219 | 4030011600 | S.CER C1608 JB 1E 104K-T | B | 94.7/72.6 |
| C220 | 4030011600 | S.CER C1608 JB 1E 104K-T | B | 90.8/72.6 |
| C221 | 4030011600 | S.CER C1608 JB 1E 104K-T | B | 96.6/66.6 |
| C222 | 4030011600 | S.CER C1608 JB 1E 104K-T | B | 94.4/89.4 |
| C223 | 4030011600 | S.CER C1608 JB 1E 104K-T | B | 90.8/83.5 |
| C224 | 4030011600 | S.CER C1608 JB 1E 104K-T | B | 85.6/83.8 |
| C225 | 4030011600 | S.CER C1608 JB 1E 104K-T | B | 91.6/77.1 |
| C226 | 4030011600 | S.CER C1608 JB 1E 104K-T | B | 91.6/75.8 |
| C227 | 4030011600 | S.CER C1608 JB 1E 104K-T | B | 96.7/72.6 |
| C228 | 4030011600 | S.CER C1608 JB 1E 104K-T | B | 91.6/74.5 |
| C229 | 4030011600 | S.CER C1608 JB 1E 104K-T | B | 100.6/89.4 |
| C230 | 4030011600 | S.CER C1608 JB 1E 104K-T | B | 97.3/83.3 |
| C231 | 4030011600 | S.CER C1608 JB 1E 104K-T | B | 102.5/83.6 |
| C232 | 4030011600 | S.CER C1608 JB 1E 104K-T | B | 91.6/81.0 |
| C233 | 4030011600 | S.CER C1608 JB 1E 104K-T | B | 102.5/77.1 |
| C234 | 4030011600 | S.CER C1608 JB 1E 104K-T | B | 99.3/72.6 |
| C235 | 4030011600 | S.CER C1608 JB 1E 104K-T | B | 102.2/66.4 |
| C236 | 4030011600 | S.CER C1608 JB 1E 104K-T | B | 102.5/82.3 |
| C237 | 4030011600 | S.CER C1608 JB 1E 104K-T | B | 102.5/81.0 |
| C238 | 4030011600 | S.CER C1608 JB 1E 104K-T | B | 102.5/79.7 |
| C239 | 4030011600 | S.CER C1608 JB 1E 104K-T | B | 85.6/81.2 |
| C240 | 4030011600 | S.CER C1608 JB 1E 104K-T | B | 102.5/75.8 |
| C241 | 4030011600 | S.CER C1608 JB 1E 104K-T | B | 102.5/74.5 |
| C242 | 4030011600 | S.CER C1608 JB 1E 104K-T | B | 103.2/72.6 |
| C243 | 4030011600 | S.CER C1608 JB 1E 104K-T | B | 101.9/72.6 |
| C244 | 4030011600 | S.CER C1608 JB 1E 104K-T | B | 91.6/78.4 |
| C245 | 4030011600 | S.CER C1608 JB 1E 104K-T | B | 92.1/83.3 |
| C246 | 4030011600 | S.CER C1608 JB 1E 104K-T | B | 102.5/78.4 |
| C247 | 4030011600 | S.CER C1608 JB 1E 104K-T | B | 99.4/83.3 |
| C248 | 4030011600 | S.CER C1608 JB 1E 104K-T | B | 100.6/72.6 |
| C249 | 4030011600 | S.CER C1608 JB 1E 104K-T | B | 93.4/72.6 |
| C250 | 4030007050 | S.CER C1608 CH 1H 220J-T | T | 101.1/91.3 |
| C251 | 4030007050 | S.CER C1608 CH 1H 220J-T | T | 98.5/91.3 |
| C252 | 4030006990 | S.CER C1608 CH 1H 080D-T | T | 99.0/63.9 |
| C253 | 4030006990 | S.CER C1608 CH 1H 080D-T | T | 101.6/63.9 |
| C254 | 4030006900 | S.CER C1608 JB 1H 103K-T | T | 83.8/84.6 |
| C255 | 4510008520 | S.ELE EEE1CA470SP | T | 101.3/100.8 |

Eqv.= This component is equivalent to the REF No. component listed above, and may be substituted on parts orders and repairs.

M.=Mounted side (T: Mounted on the Top side, B: Mounted on the Bottom side)
S.=Surface mount

## [LOGIC UNIT]

| REF NO. | PARTS NO. | DESCRIPTION | M. | H/V LOCATION |
|---|---|---|---|---|
| C256 | 4030006900 | S.CER C1608 JB 1H 103K-T | T | 83.0/64.2 |
| C257 | 4510007130 | S.ELE EEFCD 0J 470R | T | 78.5/66.3 |
| C258 | 4030011600 | S.CER C1608 JB 1E 104K-T | T | 84.9/61.0 |
| C259 | 4030011600 | S.CER C1608 JB 1E 104K-T | B | 85.6/76.9 |
| C260 | 4030011600 | S.CER C1608 JB 1E 104K-T | T | 214.3/33.1 |
| C261 | 4030011600 | S.CER C1608 JB 1E 104K-T | T | 214.3/31.8 |
| C262 | 4030011600 | S.CER C1608 JB 1E 104K-T | T | 214.3/29.8 |
| C263 | 4030011600 | S.CER C1608 JB 1E 104K-T | T | 214.3/28.5 |
| C264 | 4030011600 | S.CER C1608 JB 1E 104K-T | T | 205.4/23.2 |
| C265 | 4510008540 | S.ELE EEE1CA100SR | T | 214.2/36.7 |
| C266 | 4030011600 | S.CER C1608 JB 1E 104K-T | T | 196.3/28.8 |
| C267 | 4030007100 | S.CER C1608 CH 1H 560J-T | B | 219.4/32.6 |
| C268 | 4030007100 | S.CER C1608 CH 1H 560J-T | B | 219.4/29.6 |
| C269 | 4030007100 | S.CER C1608 CH 1H 560J-T | B | 219.4/26.6 |
| C270 | 4030007050 | S.CER C1608 CH 1H 220J-T | B | 225.0/32.6 |
| C271 | 4030007050 | S.CER C1608 CH 1H 220J-T | B | 225.0/29.6 |
| C272 | 4030007050 | S.CER C1608 CH 1H 220J-T | B | 225.0/26.6 |
| C273 | 4030011600 | S.CER C1608 JB 1E 104K-T | T | 194.2/16.6 |
| C274 | 4030007170 | S.CER C1608 CH 1H 221J-T | T | 204.0/16.5 |
| C275 | 4030007170 | S.CER C1608 CH 1H 221J-T | T | 204.0/19.4 |
| C276 | 4030007050 | S.CER C1608 CH 1H 220J-T | B | 217.9/9.3 |
| C277 | 4030007050 | S.CER C1608 CH 1H 220J-T | B | 220.8/9.3 |
| C278 | 4510008500 | S.ELE EEE1CA101WP | T | 223.5/38.4 |
| C279 | 4030007050 | S.CER C1608 CH 1H 220J-T | B | 227.9/9.3 |
| C280 | 4030007050 | S.CER C1608 CH 1H 220J-T | B | 230.7/9.3 |
| C281 | 4510008500 | S.ELE EEE1CA101WP | T | 223.5/30.6 |
| C282 | 4030011600 | S.CER C1608 JB 1E 104K-T | B | 215.6/39.1 |
| C283 | 4510008550 | S.ELE EEE1HA010SR | T | 217.2/42.0 |
| C284 | 4030011600 | S.CER C1608 JB 1E 104K-T | B | 104.7/21.3 |
| C285 | 4510008540 | S.ELE EEE1CA100SR | T | 105.7/37.5 |
| C286 | 4510008540 | S.ELE EEE1CA100SR | T | 105.7/32.7 |
| C287 | 4030011600 | S.CER C1608 JB 1E 104K-T | B | 104.7/23.3 |
| C288 | 4510008540 | S.ELE EEE1CA100SR | T | 105.7/27.9 |
| C289 | 4030011600 | S.CER C1608 JB 1E 104K-T | B | 104.7/24.6 |
| C290 | 4030011600 | S.CER C1608 JB 1E 104K-T | B | 115.6/21.3 |
| C291 | 4510008540 | S.ELE EEE1CA100SR | T | 111.8/37.5 |
| C292 | 4510008540 | S.ELE EEE1CA100SR | T | 111.8/32.7 |
| C293 | 4030011600 | S.CER C1608 JB 1E 104K-T | B | 115.6/23.3 |
| C294 | 4510008540 | S.ELE EEE1CA100SR | T | 111.8/27.9 |
| C295 | 4030011600 | S.CER C1608 JB 1E 104K-T | B | 115.6/24.6 |
| C296 | 4030011600 | S.CER C1608 JB 1E 104K-T | B | 126.4/33.9 |
| C297 | 4510008540 | S.ELE EEE1CA100SR | T | 124.0/39.9 |
| C298 | 4030011600 | S.CER C1608 JB 1E 104K-T | B | 126.4/31.3 |
| C299 | 4510008540 | S.ELE EEE1CA100SR | T | 124.0/35.1 |
| C300 | 4030011600 | S.CER C1608 JB 1E 104K-T | B | 114.0/34.6 |
| C301 | 4510008540 | S.ELE EEE1CA100SR | T | 117.9/39.9 |
| C302 | 4030011600 | S.CER C1608 JB 1E 104K-T | B | 113.4/32.5 |
| C303 | 4510008540 | S.ELE EEE1CA100SR | T | 117.9/35.1 |
| C401 | 4030011600 | S.CER C1608 JB 1E 104K-T | B | 28.2/61.5 |
| C402 | 4030011600 | S.CER C1608 JB 1E 104K-T | B | 22.3/61.5 |
| C403 | 4030011600 | S.CER C1608 JB 1E 104K-T | B | 8.8/53.3 |
| C404 | 4030011600 | S.CER C1608 JB 1E 104K-T | B | 8.8/45.7 |
| C405 | 4030011600 | S.CER C1608 JB 1E 104K-T | B | 20.3/35.7 |
| C406 | 4030011600 | S.CER C1608 JB 1E 104K-T | B | 25.5/35.7 |
| C407 | 4030011600 | S.CER C1608 JB 1E 104K-T | B | 29.8/35.7 |
| C408 | 4030011600 | S.CER C1608 JB 1E 104K-T | B | 38.5/42.4 |
| C409 | 4030011600 | S.CER C1608 JB 1E 104K-T | B | 38.7/47.6 |
| C410 | 4030011600 | S.CER C1608 JB 1E 104K-T | B | 38.7/51.0 |
| C411 | 4030011600 | S.CER C1608 JB 1E 104K-T | B | 41.0/36.2 |
| C412 | 4030006860 | S.CER C1608 JB 1H 102K-T | T | 29.4/44.8 |
| C413 | 4030006900 | S.CER C1608 JB 1H 103K-T | T | 26.8/44.8 |
| C414 | 4030007150 | S.CER C1608 CH 1H 151J-T | T | 28.1/44.8 |
| C415 | 4030011600 | S.CER C1608 JB 1E 104K-T | B | 15.3/30.6 |
| C416 | 4510008540 | S.ELE EEE1CA100SR | T | 13.7/28.8 |
| C417 | 4030011600 | S.CER C1608 JB 1E 104K-T | B | 15.3/31.9 |
| C418 | 4510008540 | S.ELE EEE1CA100SR | T | 13.7/33.6 |
| C419 | 4030006900 | S.CER C1608 JB 1H 103K-T | T | 36.9/26.6 |
| C420 | 4030007150 | S.CER C1608 CH 1H 151J-T | T | 36.9/25.3 |
| C421 | 4550007520 | S.TAN F931A106MAABMA | B | 19.7/26.8 |
| C422 | 4030011600 | S.CER C1608 JB 1E 104K-T | T | 20.8/66.3 |
| C423 | 4030011600 | S.CER C1608 JB 1E 104K-T | B | 35.4/85.2 |
| C424 | 4030011600 | S.CER C1608 JB 1E 104K-T | B | 38.2/77.2 |
| C425 | 4030011600 | S.CER C1608 JB 1E 104K-T | B | 34.6/71.4 |
| C426 | 4030011600 | S.CER C1608 JB 1E 104K-T | B | 34.8/67.7 |
| C427 | 4030011600 | S.CER C1608 JB 1E 104K-T | B | 26.8/62.8 |
| C428 | 4030011600 | S.CER C1608 JB 1E 104K-T | B | 20.8/62.8 |
| C429 | 4030011600 | S.CER C1608 JB 1E 104K-T | B | 18.2/62.8 |
| C430 | 4030011600 | S.CER C1608 JB 1E 104K-T | B | 9.7/81.5 |
| C431 | 4030011600 | S.CER C1608 JB 1E 104K-T | B | 12.3/72.4 |
| C432 | 4030011600 | S.CER C1608 JB 1E 104K-T | B | 12.3/79.0 |
| C433 | 4030011600 | S.CER C1608 JB 1E 104K-T | B | 12.3/82.3 |
| C434 | 4030011600 | S.CER C1608 JB 1E 104K-T | B | 17.2/90.2 |
| C435 | 4030011600 | S.CER C1608 JB 1E 104K-T | B | 20.8/90.2 |
| C436 | 4030011600 | S.CER C1608 JB 1E 104K-T | B | 25.8/90.2 |
| C437 | 4030011600 | S.CER C1608 JB 1E 104K-T | B | 146.2/21.3 |
| C438 | 4030011600 | S.CER C1608 JB 1E 104K-T | B | 152.7/21.3 |
| C439 | 4030011600 | S.CER C1608 JB 1E 104K-T | B | 153.0/18.4 |
| C440 | 4010008500 | CER DEBB33D102KA2B (DE0805B102K) | | |
| C601 | 4030011600 | S.CER C1608 JB 1E 104K-T | B | 169.5/51.4 |
| C602 | 4030011600 | S.CER C1608 JB 1E 104K-T | B | 169.2/57.7 |
| C603 | 4030011600 | S.CER C1608 JB 1E 104K-T | B | 79.6/44.8 |
| C604 | 4030011600 | S.CER C1608 JB 1E 104K-T | B | 99.9/36.8 |
| C605 | 4030011600 | S.CER C1608 JB 1E 104K-T | B | 102.1/21.3 |
| C606 | 4030011600 | S.CER C1608 JB 1E 104K-T | B | 83.3/16.9 |
| C607 | 4030011600 | S.CER C1608 JB 1E 104K-T | B | 81.6/16.9 |
| C608 | 4510008540 | S.ELE EEE1CA100SR | T | 67.1/16.4 |
| C609 | 4510008540 | S.ELE EEE1CA100SR | T | 62.5/34.0 |
| C610 | 4030006900 | S.CER C1608 JB 1H 103K-T | B | 71.3/19.5 |
| C611 | 4030006900 | S.CER C1608 JB 1H 103K-T | B | 71.3/20.8 |
| C612 | 4030007010 | S.CER C1608 CH 1H 100D-T | T | 81.0/16.9 |
| C613 | 4030007010 | S.CER C1608 CH 1H 100D-T | T | 83.6/16.9 |
| C614 | 4030011600 | S.CER C1608 JB 1E 104K-T | B | 86.3/14.3 |
| C615 | 4030006880 | S.CER C1608 JB 1H 472K-T | B | 71.3/31.2 |
| C616 | 4030006880 | S.CER C1608 JB 1H 472K-T | B | 71.3/29.9 |
| C617 | 4030006880 | S.CER C1608 JB 1H 472K-T | B | 71.3/28.6 |

## [LOGIC UNIT]

| REF NO. | PARTS NO. | DESCRIPTION | M. | H/V LOCATION |
|---|---|---|---|---|
| C618 | 4030006880 | S.CER C1608 JB 1H 472K-T | B | 71.3/27.3 |
| C619 | 4030006880 | S.CER C1608 JB 1H 472K-T | B | 71.3/26.0 |
| C620 | 4030006880 | S.CER C1608 JB 1H 472K-T | B | 71.3/24.7 |
| C621 | 4030006880 | S.CER C1608 JB 1H 472K-T | B | 71.3/23.4 |
| C622 | 4030006880 | S.CER C1608 JB 1H 472K-T | B | 71.3/22.1 |
| C623 | 4510008540 | S.ELE EEE1CA100SR | T | 178.6/62.5 |
| C624 | 4030011600 | S.CER C1608 JB 1E 104K-T | T | 174.9/60.7 |
| C625 | 4510008540 | S.ELE EEE1CA100SR | T | 184.7/62.5 |
| C626 | 4030011600 | S.CER C1608 JB 1E 104K-T | B | 63.7/20.3 |
| C627 | 4030011600 | S.CER C1608 JB 1E 104K-T | B | 60.0/20.3 |
| C628 | 4030011600 | S.CER C1608 JB 1E 104K-T | B | 73.6/39.0 |
| C629 | 4030011600 | S.CER C1608 JB 1E 104K-T | B | 57.3/39.9 |
| C630 | 4030011600 | S.CER C1608 JB 1E 104K-T | B | 150.9/51.7 |
| C631 | 4030011600 | S.CER C1608 JB 1E 104K-T | B | 149.0/48.2 |
| C632 | 4030011600 | S.CER C1608 JB 1E 104K-T | B | 131.9/66.0 |
| C633 | 4030011600 | S.CER C1608 JB 1E 104K-T | B | 138.2/66.8 |
| C634 | 4030011600 | S.CER C1608 JB 1E 104K-T | B | 150.9/58.0 |
| C635 | 4030011600 | S.CER C1608 JB 1E 104K-T | B | 131.1/58.5 |
| C636 | 4030011600 | S.CER C1608 JB 1E 104K-T | B | 131.1/52.1 |
| C801 | 4510008540 | S.ELE EEE1CA100SR | T | 141.0/114.6 |
| C802 | 4030011600 | S.CER C1608 JB 1E 104K-T | B | 138.5/110.7 |
| C803 | 4030011600 | S.CER C1608 JB 1E 104K-T | B | 138.5/113.3 |
| C804 | 4510008520 | S.ELE EEE1CA470SP | T | 147.2/113.8 |
| C805 | 4510008870 | S.ELE EEE1AA471UP | T | 100.2/110.4 |
| C806 | 4510008870 | S.ELE EEE1AA471UP | T | 109.5/110.4 |
| C807 | 4510008870 | S.ELE EEE1AA471UP | T | 119.4/100.6 |
| C808 | 4510008870 | S.ELE EEE1AA471UP | T | 120.0/109.6 |
| C809 | 4510008560 | S.ELE EEE1HAR47SR | T | 160.0/65.3 |
| C810 | 4510008560 | S.ELE EEE1HAR47SR | T | 166.6/65.3 |
| C811 | 4510008560 | S.ELE EEE1HAR47SR | T | 173.2/65.3 |
| C812 | 4030006860 | S.CER C1608 JB 1H 102K-T | B | 66.9/117.7 |
| C813 | 4030006860 | S.CER C1608 JB 1H 102K-T | B | 84.9/122.4 |
| C814 | 4030006860 | S.CER C1608 JB 1H 102K-T | B | 83.6/117.0 |
| C815 | 4030006860 | S.CER C1608 JB 1H 102K-T | T | 88.8/116.0 |
| C816 | 4030006860 | S.CER C1608 JB 1H 102K-T | B | 97.4/121.4 |
| C817 | 4030006860 | S.CER C1608 JB 1H 102K-T | B | 100.6/122.1 |
| C818 | 4030006860 | S.CER C1608 JB 1H 102K-T | B | 103.1/122.1 |
| C819 | 4030006860 | S.CER C1608 JB 1H 102K-T | B | 105.6/122.1 |
| C820 | 4030006860 | S.CER C1608 JB 1H 102K-T | B | 108.9/121.4 |
| C821 | 4510008520 | S.ELE EEE1CA470SP | T | 211.0/16.0 |
| C822 | 4510008500 | S.ELE EEE1CA101WP | T | 14.4/109.5 |
| C823 | 4030006880 | S.CER C1608 JB 1H 472K-T | B | 33.9/114.5 |
| C824 | 4030006860 | S.CER C1608 JB 1H 102K-T | T | 20.0/24.5 |
| C825 | 4030011600 | S.CER C1608 JB 1E 104K-T | B | 20.4/107.7 |
| C826 | 4030006860 | S.CER C1608 JB 1H 102K-T | T | 122.2/118.1 |
| C827 | 4030006860 | S.CER C1608 JB 1H 102K-T | T | 117.7/118.8 |
| C828 | 4030007130 | S.CER C1608 CH 1H 101J-T | T | 119.0/118.8 |
| C829 | 4030006860 | S.CER C1608 JB 1H 102K-T | T | 127.2/116.1 |
| C830 | 4030007130 | S.CER C1608 CH 1H 101J-T | T | 128.5/116.1 |
| C831 | 4030006860 | S.CER C1608 JB 1H 102K-T | T | 130.6/115.5 |
| C832 | 4030007130 | S.CER C1608 CH 1H 101J-T | T | 130.6/116.8 |
| C833 | 4030006860 | S.CER C1608 JB 1H 102K-T | T | 134.0/116.1 |
| C834 | 4030007130 | S.CER C1608 CH 1H 101J-T | T | 132.7/116.1 |
| C835 | 4030011600 | S.CER C1608 JB 1E 104K-T | T | 127.9/110.7 |
| C836 | 4510008540 | S.ELE EEE1CA100SR | T | 127.9/106.1 |
| C837 | 4030011600 | S.CER C1608 JB 1E 104K-T | T | 135.8/106.8 |
| C838 | 4510008540 | S.ELE EEE1CA100SR | T | 132.7/106.1 |
| C850 | 4030011600 | S.CER C1608 JB 1E 104K-T | B | 165.0/40.9 |
| C851 | 4510008540 | S.ELE EEE1CA100SR | T | 128.0/31.2 |
| C852 | 4030009490 | S.CER C1608 JB 1H 821K-T | B | 142.2/11.6 |
| C853 | 4030009490 | S.CER C1608 JB 1H 821K-T | B | 142.7/15.0 |
| C855 | 4510008540 | S.ELE EEE1CA100SR | T | 117.8/29.2 |
| C856 | 4030009490 | S.CER C1608 JB 1H 821K-T | B | 134.6/17.2 |
| C857 | 4030009490 | S.CER C1608 JB 1H 821K-T | B | 131.8/19.8 |
| C859 | 4510008540 | S.ELE EEE1CA100SR | T | 123.2/29.2 |
| C860 | 4030009490 | S.CER C1608 JB 1H 821K-T | B | 136.9/7.3 |
| C861 | 4030009490 | S.CER C1608 JB 1H 821K-T | B | 140.8/7.3 |
| C865 | 4510008540 | S.ELE EEE1CA100SR | T | 119.4/22.3 |
| C866 | 4030007160 | S.CER C1608 CH 1H 181J-T | B | 121.1/5.0 |
| C867 | 4030009880 | S.CER C1608 JB 1H 682K-T | T | 115.2/18.0 |
| C868 | 4030008880 | S.CER C1608 JB 1H 223K-T | T | 115.2/15.4 |
| C869 | 4510008540 | S.ELE EEE1CA100SR | T | 109.5/16.3 |
| C871 | 4510008540 | S.ELE EEE1CA100SR | T | 104.7/16.3 |
| C873 | 4030011600 | S.CER C1608 JB 1E 104K-T | B | 120.5/8.4 |
| C874 | 4030011600 | S.CER C1608 JB 1E 104K-T | B | 109.0/10.8 |
| C875 | 4510008540 | S.ELE EEE1CA100SR | T | 114.6/22.3 |
| C876 | 4510008540 | S.ELE EEE1CA100SR | T | 119.1/16.3 |
| C877 | 4030011600 | S.CER C1608 JB 1E 104K-T | B | 137.4/18.5 |
| C878 | 4030011600 | S.CER C1608 JB 1E 104K-T | B | 134.3/7.3 |
| C879 | 4510008540 | S.ELE EEE1CA100SR | T | 124.2/22.3 |
| C880 | 4510008540 | S.ELE EEE1CA100SR | T | 124.2/16.3 |
| C883 | 4510008560 | S.ELE EEE1HAR47SR | T | 184.7/67.3 |
| C884 | 4510008560 | S.ELE EEE1HAR47SR | T | 180.1/71.2 |
| C901 | 4510008540 | S.ELE EEE1CA100SR | T | 183.8/51.0 |
| C902 | 4510008540 | S.ELE EEE1CA100SR | T | 189.0/51.0 |
| C903 | 4030011600 | S.CER C1608 JB 1E 104K-T | B | 186.4/50.2 |
| C904 | 4030011600 | S.CER C1608 JB 1E 104K-T | B | 193.8/57.6 |
| C905 | 4510008540 | S.ELE EEE1CA100SR | T | 189.0/57.1 |
| C906 | 4510008540 | S.ELE EEE1CA100SR | T | 183.8/57.1 |
| C907 | 4030006860 | S.CER C1608 JB 1H 102K-T | B | 170.6/40.4 |
| C908 | 4030006860 | S.CER C1608 JB 1H 102K-T | B | 171.6/37.8 |
| C909 | 4030006860 | S.CER C1608 JB 1H 102K-T | B | 173.6/37.8 |
| C910 | 4030006860 | S.CER C1608 JB 1H 102K-T | B | 175.1/28.3 |
| C911 | 4030006860 | S.CER C1608 JB 1H 102K-T | B | 176.1/30.9 |
| C912 | 4030006860 | S.CER C1608 JB 1H 102K-T | B | 177.6/37.8 |
| C913 | 4030006860 | S.CER C1608 JB 1H 102K-T | B | 178.6/40.3 |
| C914 | 4030006860 | S.CER C1608 JB 1H 102K-T | B | 179.6/37.8 |
| C915 | 4030006860 | S.CER C1608 JB 1H 102K-T | B | 180.1/30.9 |
| C916 | 4030006860 | S.CER C1608 JB 1H 102K-T | B | 180.6/40.3 |
| C917 | 4030006860 | S.CER C1608 JB 1H 102K-T | B | 181.1/28.3 |
| C918 | 4030006860 | S.CER C1608 JB 1H 102K-T | B | 182.1/30.9 |
| C919 | 4030006860 | S.CER C1608 JB 1H 102K-T | B | 182.6/40.3 |
| C920 | 4030006860 | S.CER C1608 JB 1H 102K-T | B | 183.1/28.3 |
| C921 | 4030006860 | S.CER C1608 JB 1H 102K-T | B | 183.6/37.8 |
| C922 | 4030006860 | S.CER C1608 JB 1H 102K-T | B | 184.1/30.9 |

Eqv.= This component is equivalent to the REF No. component listed above, and may be substituted on parts orders and repairs.

M.=Mounted side (T: Mounted on the Top side, B: Mounted on the Bottom side)
S.=Surface mount

## [LOGIC UNIT]

| REF NO. | PARTS NO. | DESCRIPTION | M. | H/V LOCATION |
|---|---|---|---|---|
| C923 | 4030006860 | S.CER C1608 JB 1H 102K-T | B | 133.7/37.8 |
| C924 | 4030006860 | S.CER C1608 JB 1H 102K-T | B | 134.7/40.4 |
| C925 | 4030006860 | S.CER C1608 JB 1H 102K-T | B | 135.7/37.8 |
| C926 | 4030006860 | S.CER C1608 JB 1H 102K-T | B | 136.2/30.9 |
| C927 | 4030006860 | S.CER C1608 JB 1H 102K-T | B | 136.7/40.4 |
| C928 | 4030006860 | S.CER C1608 JB 1H 102K-T | B | 137.2/25.5 |
| C929 | 4030006860 | S.CER C1608 JB 1H 102K-T | B | 137.7/37.8 |
| C930 | 4030006860 | S.CER C1608 JB 1H 102K-T | B | 138.2/28.1 |
| C931 | 4030006860 | S.CER C1608 JB 1H 102K-T | B | 138.7/40.4 |
| C932 | 4030006860 | S.CER C1608 JB 1H 102K-T | B | 139.2/25.5 |
| C933 | 4030006860 | S.CER C1608 JB 1H 102K-T | B | 139.7/37.8 |
| C934 | 4030006860 | S.CER C1608 JB 1H 102K-T | B | 140.2/28.1 |
| C935 | 4030006860 | S.CER C1608 JB 1H 102K-T | B | 140.7/40.4 |
| C936 | 4030006860 | S.CER C1608 JB 1H 102K-T | B | 141.2/25.5 |
| C937 | 4030006860 | S.CER C1608 JB 1H 102K-T | B | 141.7/37.8 |
| C938 | 4030006860 | S.CER C1608 JB 1H 102K-T | B | 142.2/22.9 |
| C939 | 4030006860 | S.CER C1608 JB 1H 102K-T | B | 142.7/40.4 |
| C940 | 4030006860 | S.CER C1608 JB 1H 102K-T | B | 143.2/25.5 |
| C941 | 4030006860 | S.CER C1608 JB 1H 102K-T | B | 144.2/22.9 |
| C942 | 4030006860 | S.CER C1608 JB 1H 102K-T | B | 146.2/30.9 |
| C943 | 4030006860 | S.CER C1608 JB 1H 102K-T | B | 147.2/28.3 |
| C944 | 4030006860 | S.CER C1608 JB 1H 102K-T | B | 148.2/30.9 |
| C945 | 4030006860 | S.CER C1608 JB 1H 102K-T | B | 150.2/28.3 |
| C946 | 4030006860 | S.CER C1608 JB 1H 102K-T | B | 151.2/30.9 |
| C947 | 4030006860 | S.CER C1608 JB 1H 102K-T | B | 214.5/84.7 |
| C948 | 4030006860 | S.CER C1608 JB 1H 102K-T | B | 220.7/81.7 |
| C949 | 4030006860 | S.CER C1608 JB 1H 102K-T | B | 223.0/91.8 |
| C950 | 4030006860 | S.CER C1608 JB 1H 102K-T | B | 220.7/94.3 |
| C951 | 4030006860 | S.CER C1608 JB 1H 102K-T | B | 214.5/92.7 |
| C952 | 4030006860 | S.CER C1608 JB 1H 102K-T | B | 213.6/72.3 |
| C953 | 4030006860 | S.CER C1608 JB 1H 102K-T | B | 211.6/76.2 |
| C954 | 4030006860 | S.CER C1608 JB 1H 102K-T | B | 205.7/77.9 |
| C955 | 4030006860 | S.CER C1608 JB 1H 102K-T | B | 211.6/79.6 |
| C956 | 4030006860 | S.CER C1608 JB 1H 102K-T | T | 21.0/113.9 |
| C957 | 4030006860 | S.CER C1608 JB 1H 102K-T | T | 24.0/113.9 |
| C958 | 4030006860 | S.CER C1608 JB 1H 102K-T | T | 27.0/113.9 |
| C959 | 4030006860 | S.CER C1608 JB 1H 102K-T | T | 30.0/113.9 |
| C960 | 4030006860 | S.CER C1608 JB 1H 102K-T | B | 180.6/79.6 |
| C961 | 4030006860 | S.CER C1608 JB 1H 102K-T | B | 183.3/90.3 |
| C962 | 4030006860 | S.CER C1608 JB 1H 102K-T | B | 187.8/90.3 |
| C963 | 4030006860 | S.CER C1608 JB 1H 102K-T | B | 188.8/81.7 |
| C964 | 4030006860 | S.CER C1608 JB 1H 102K-T | B | 193.0/81.7 |
| C965 | 4030006860 | S.CER C1608 JB 1H 102K-T | B | 193.8/90.3 |
| C966 | 4030006860 | S.CER C1608 JB 1H 102K-T | B | 194.9/78.9 |
| C967 | 4030006860 | S.CER C1608 JB 1H 102K-T | B | 222.8/78.7 |
| C968 | 4030006860 | S.CER C1608 JB 1H 102K-T | B | 228.7/79.0 |
| C969 | 4030006860 | S.CER C1608 JB 1H 102K-T | B | 222.0/74.4 |
| C970 | 4030006860 | S.CER C1608 JB 1H 102K-T | B | 230.0/74.4 |
| C971 | 4030006860 | S.CER C1608 JB 1H 102K-T | B | 220.9/49.3 |
| C972 | 4030006860 | S.CER C1608 JB 1H 102K-T | B | 229.5/50.3 |
| C973 | 4030006860 | S.CER C1608 JB 1H 102K-T | B | 227.1/62.3 |
| C974 | 4030006860 | S.CER C1608 JB 1H 102K-T | B | 218.5/63.3 |
| C975 | 4030006860 | S.CER C1608 JB 1H 102K-T | B | 227.1/66.8 |
| C976 | 4030006860 | S.CER C1608 JB 1H 102K-T | B | 218.5/68.1 |
| C977 | 4030006860 | S.CER C1608 JB 1H 102K-T | T | 181.8/24.0 |
| C978 | 4030006860 | S.CER C1608 JB 1H 102K-T | T | 159.5/23.7 |
| C979 | 4030006860 | S.CER C1608 JB 1H 102K-T | T | 190.4/18.9 |
| C980 | 4030006860 | S.CER C1608 JB 1H 102K-T | T | 188.8/24.6 |
| C981 | 4030006860 | S.CER C1608 JB 1H 102K-T | T | 166.2/22.6 |
| C982 | 4030006860 | S.CER C1608 JB 1H 102K-T | T | 173.4/42.7 |
| C983 | 4030011600 | S.CER C1608 JB 1E 104K-T | T | 180.8/84.4 |
| C984 | 4030010210 | S.CER C3216 JB 1C 105M-T | B | 198.6/85.6 |
| C985 | 4030011600 | S.CER C1608 JB 1E 104K-T | T | 195.5/83.6 |
| C991 | 4030006880 | S.CER C1608 JB 1H 472K-T | T | 208.4/92.0 |
| C992 | 4030006880 | S.CER C1608 JB 1H 472K-T | T | 208.4/94.0 |
| C993 | 4030006880 | S.CER C1608 JB 1H 472K-T | T | 220.2/93.0 |
| C994 | 4030006880 | S.CER C1608 JB 1H 472K-T | T | 220.2/81.5 |
| C995 | 4030006880 | S.CER C1608 JB 1H 472K-T | T | 208.4/80.0 |
| C996 | 4030006880 | S.CER C1608 JB 1H 472K-T | T | 220.2/78.6 |
| C997 | 4030006880 | S.CER C1608 JB 1H 472K-T | T | 218.4/73.2 |
| | | | | |
| J1 | 6510022491 | S.CON AXK5S30047YG | T | 40.0/98.0 |
| J2 | 6510019871 | S.CON AXK5S40047YG | T | 85.0/98.0 |
| J51 | 6910014251 | CON IMSA-9202B-2-06Z041-PT1 | | |
| J102 | 6510019981 | S.CON 52808-1671(1690) | T | 72.5/40.0 |
| J602 | 6510019971 | S.CON 52808-1071 | T | 95.5/14.5 |
| J604 | 6510019971 | S.CON 52808-1071 | T | 72.5/23.0 |
| J802 | 6510024261 | S.CON S9B-PH-SM4-TB(LF)(SN) | T | 158.5/5.0 |
| J803 | 6510024401 | CON S11B-EH(LF)(SN) | | |
| J804 | 6510024251 | S.CON S5B-PH-SM4-TB(LF)(SN) | T | 213.2/5.0 |
| J805 | 6510024111 | S.CON 52793-2070 (2090) | T | 129.6/123.9 |
| J806 | 6510024131 | S.CON IMSA-9637S-40Y905 | T | 193.1/4.7 |
| J807 | 6510024151 | S.CON 50FY-BMT-TB(LF)(SN) | T | 53.6/22.0 |
| J808 | 6510022472 | S.CON 40FLT-SM2-TB(LF)(SN)(M) | T | 175.4/34.3 |
| J809 | 6510022472 | S.CON 40FLT-SM2-TB(LF)(SN)(M) | T | 143.5/34.3 |
| J810 | 6510022731 | S.CON S13B-PH-SM4-TB(LF)(SN) | T | 120.0/7.0 |
| J811 | 6510021561 | S.CON 52808-2470 (2490) | T | 214.3/84.5 |
| J812 | 6510020701 | S.CON 52793-1270 (1290) | T | 19.5/123.9 |
| J813 | 6510020081 | S.CON 52808-2071(2090) | T | 189.0/89.8 |
| J814 | 6510019971 | S.CON 52808-1071 | T | 229.0/79.5 |
| J815 | 6510019991 | S.CON 52808-2271(2291) | T | 229.0/58.0 |
| J816 | 6510019991 | S.CON 52808-2271(2291) | T | 171.2/17.5 |
| J820 | 6510003581 | CON S10B-EH-S(LF)(SN) | | |
| J821 | 6510003551 | CON S07B-EH-S(LF)(SN) | | |
| J822 | 6510021601 | S.CON S2B-PH-SM4-TB(LF)(SN) | T | 15.5/18.0 |
| J823 | 6510021601 | S.CON S2B-PH-SM4-TB(LF)(SN) | T | 53.8/122.6 |
| J824 | 6510024100 | CON SC25-02WL | | |
| J825 | 6510019421 | S.CON B8B-ZR-SM4-TF(LF)(SN) | T | 29.4/20.8 |
| J826 | 6510023801 | S.CON S4B-ZR-SM4A-TF(LF)(SN) | T | 141.3/4.5 |
| | | | | |
| DS401 | 5040002930 | S.LED SML-512MW T86 | T | 11.9/96.5 |
| DS402 | 5040002930 | S.LED SML-512MW T86 | T | 11.9/94.9 |
| DS403 | 5040002930 | S.LED SML-512MW T86 | T | 11.9/93.2 |

## [LOGIC UNIT]

| REF NO. | PARTS NO. | DESCRIPTION | M. | H/V LOCATION |
|---|---|---|---|---|
| S51 | 2260001890 | S.SWI SKQDPA | T | 142.7/106.9 |
| | | | | |
| T401 | 5920000841 | S.TRA H1102NL <QUA> | T | 150.0/20.0 |
| | | | | |
| EP101 | 6910013310 | S.BEA MMZ1608D121B | T | 3.6/75.0 |
| EP102 | 6910013310 | S.BEA MMZ1608D121B | T | 10.4/80.5 |
| EP103 | 6910013310 | S.BEA MMZ1608D121B | T | 14.9/80.7 |
| EP201 | 6910012350 | S.BEA MMZ1608Y 102BT | T | 201.6/22.2 |
| EP202 | 6910012350 | S.BEA MMZ1608Y 102BT | T | 198.4/28.0 |
| EP203 | 6910012350 | S.BEA MMZ1608Y 102BT | T | 83.8/86.4 |
| EP204 | 6910012350 | S.BEA MMZ1608Y 102BT | T | 79.7/72.5 |
| EP401 | 6910013310 | S.BEA MMZ1608D121B | T | 19.4/79.7 |
| EP402 | 6910013310 | S.BEA MMZ1608D121B | T | 17.3/75.6 |
| EP403 | 6910013310 | S.BEA MMZ1608D121B | T | 19.4/82.5 |
| EP801 | 6910013310 | S.BEA MMZ1608D121B | T | 204.5/9.9 |
| EP802 | 6910013310 | S.BEA MMZ1608D121B | T | 202.2/10.6 |
| EP803 | 6910013310 | S.BEA MMZ1608D121B | T | 200.9/10.6 |
| EP804 | 6910013310 | S.BEA MMZ1608D121B | T | 199.6/10.6 |
| EP805 | 6910013310 | S.BEA MMZ1608D121B | B | 201.4/8.3 |
| EP806 | 6910013310 | S.BEA MMZ1608D121B | T | 198.3/10.6 |
| EP807 | 6910013310 | S.BEA MMZ1608D121B | B | 200.1/8.3 |
| EP808 | 6910013310 | S.BEA MMZ1608D121B | T | 197.0/10.6 |
| EP809 | 6910013310 | S.BEA MMZ1608D121B | B | 198.8/8.3 |
| EP810 | 6910013310 | S.BEA MMZ1608D121B | T | 195.7/10.6 |
| EP811 | 6910013310 | S.BEA MMZ1608D121B | B | 197.5/8.3 |
| EP812 | 6910013310 | S.BEA MMZ1608D121B | B | 196.2/8.3 |
| EP813 | 6910013310 | S.BEA MMZ1608D121B | T | 194.4/10.6 |
| EP814 | 6910013310 | S.BEA MMZ1608D121B | T | 193.0/10.6 |
| EP815 | 6910013310 | S.BEA MMZ1608D121B | T | 191.7/10.9 |
| EP816 | 6910013310 | S.BEA MMZ1608D121B | T | 190.4/11.6 |
| EP817 | 6910013310 | S.BEA MMZ1608D121B | T | 189.1/12.3 |
| EP818 | 6910013310 | S.BEA MMZ1608D121B | T | 187.8/12.0 |
| EP819 | 6910013310 | S.BEA MMZ1608D121B | T | 186.5/11.6 |
| EP820 | 6910013310 | S.BEA MMZ1608D121B | T | 183.6/10.0 |
| EP821 | 6910015980 | S.BEA MMZ1608S 181CT-AS | T | 71.1/116.6 |
| EP822 | 6910015980 | S.BEA MMZ1608S 181CT-AS | T | 72.5/116.6 |
| EP826 | 6910012350 | S.BEA MMZ1608Y 102BT | T | 133.2/118.1 |
| EP827 | 6910012350 | S.BEA MMZ1608Y 102BT | B | 137.3/124.5 |
| EP828 | 6910012350 | S.BEA MMZ1608Y 102BT | B | 137.3/123.1 |
| EP829 | 6910012350 | S.BEA MMZ1608Y 102BT | T | 135.3/117.4 |
| EP972 | 6910015970 | S.BEA MMZ1608B 301CT-AS | T | 139.1/11.2 |
| EP973 | 6910015970 | S.BEA MMZ1608B 301CT-AS | T | 142.1/11.2 |
| EP996 | 6910015970 | S.BEA MMZ1608B 301CT-AS | B | 188.5/92.2 |
| EP997 | 6910015970 | S.BEA MMZ1608B 301CT-AS | B | 189.5/83.6 |
| EP1001 | 6910015970 | S.BEA MMZ1608B 301CT-AS | B | 193.5/83.6 |
| EP1002 | 6910015970 | S.BEA MMZ1608B 301CT-AS | B | 194.5/92.2 |
| EP1101 | 6910013310 | S.BEA MMZ1608D121B | T | 39.4/13.9 |
| EP1102 | 6910013310 | S.BEA MMZ1608D121B | T | 40.1/16.6 |
| EP1103 | 6910013310 | S.BEA MMZ1608D121B | T | 40.8/13.9 |
| EP1104 | 6910013310 | S.BEA MMZ1608D121B | T | 41.5/16.6 |
| EP1105 | 6910013310 | S.BEA MMZ1608D121B | T | 42.2/13.9 |
| EP1106 | 6910013310 | S.BEA MMZ1608D121B | T | 42.9/16.6 |
| EP1107 | 6910013310 | S.BEA MMZ1608D121B | T | 43.6/13.9 |
| EP1108 | 6910013310 | S.BEA MMZ1608D121B | T | 44.3/16.6 |
| EP1109 | 6910013310 | S.BEA MMZ1608D121B | T | 45.0/13.9 |
| EP1110 | 6910013310 | S.BEA MMZ1608D121B | T | 45.7/16.6 |
| EP1111 | 6910013310 | S.BEA MMZ1608D121B | T | 46.4/13.9 |
| EP1112 | 6910013310 | S.BEA MMZ1608D121B | T | 47.1/16.6 |
| EP1113 | 6910013310 | S.BEA MMZ1608D121B | T | 47.8/13.9 |
| EP1114 | 6910013310 | S.BEA MMZ1608D121B | T | 48.5/16.6 |
| EP1115 | 6910013310 | S.BEA MMZ1608D121B | T | 49.2/13.9 |
| EP1116 | 6910013310 | S.BEA MMZ1608D121B | T | 49.9/16.6 |
| EP1117 | 6910013310 | S.BEA MMZ1608D121B | T | 50.6/13.9 |
| EP1118 | 6910013310 | S.BEA MMZ1608D121B | T | 51.3/16.6 |
| EP1119 | 6910013310 | S.BEA MMZ1608D121B | T | 52.0/13.9 |
| EP1120 | 6910013310 | S.BEA MMZ1608D121B | T | 52.7/16.6 |
| EP1121 | 6910013310 | S.BEA MMZ1608D121B | T | 53.4/13.9 |
| EP1122 | 6910013310 | S.BEA MMZ1608D121B | T | 54.1/16.6 |
| EP1123 | 6910013310 | S.BEA MMZ1608D121B | T | 54.8/13.9 |
| EP1124 | 6910013310 | S.BEA MMZ1608D121B | T | 42.8/29.6 |
| EP1125 | 6910013310 | S.BEA MMZ1608D121B | T | 43.5/27.0 |
| EP1126 | 6910013310 | S.BEA MMZ1608D121B | T | 44.2/29.6 |
| EP1127 | 6910013310 | S.BEA MMZ1608D121B | T | 44.9/27.0 |
| EP1128 | 6910013310 | S.BEA MMZ1608D121B | T | 45.6/29.6 |
| EP1129 | 6910013310 | S.BEA MMZ1608D121B | T | 46.3/27.0 |
| EP1130 | 6910013310 | S.BEA MMZ1608D121B | T | 47.0/29.6 |
| EP1131 | 6910013310 | S.BEA MMZ1608D121B | T | 47.7/27.0 |
| EP1132 | 6910013310 | S.BEA MMZ1608D121B | T | 48.4/29.6 |
| EP1133 | 6910013310 | S.BEA MMZ1608D121B | T | 49.1/27.0 |
| EP1134 | 6910013310 | S.BEA MMZ1608D121B | T | 49.8/29.6 |
| EP1135 | 6910013310 | S.BEA MMZ1608D121B | T | 50.5/27.0 |
| EP1136 | 6910013310 | S.BEA MMZ1608D121B | T | 51.2/29.6 |
| EP1137 | 6910013310 | S.BEA MMZ1608D121B | T | 51.9/27.0 |
| EP1138 | 6910013310 | S.BEA MMZ1608D121B | T | 52.6/29.6 |
| EP1139 | 6910013310 | S.BEA MMZ1608D121B | T | 53.3/27.0 |
| EP1140 | 6910013310 | S.BEA MMZ1608D121B | T | 54.0/29.6 |
| EP1141 | 6910013310 | S.BEA MMZ1608D121B | T | 54.7/27.0 |
| EP1142 | 6910013310 | S.BEA MMZ1608D121B | T | 55.4/29.6 |
| EP1143 | 6910013310 | S.BEA MMZ1608D121B | T | 56.1/27.0 |
| EP1144 | 6910013310 | S.BEA MMZ1608D121B | T | 56.8/29.6 |
| EP1145 | 6910013310 | S.BEA MMZ1608D121B | T | 57.5/27.0 |
| EP1146 | 6910013310 | S.BEA MMZ1608D121B | T | 58.2/29.6 |

Eqv.= This component is equivalent to the REF No. component listed above, and may be substituted on parts orders and repairs.

M.=Mounted side (T: Mounted on the Top side, B: Mounted on the Bottom side)
S.=Surface mount

## [PA200W UNIT]

| REF NO. | PARTS NO. | DESCRIPTION | | M. | H/V LOCATION |
|---|---|---|---|---|---|
| IC2 | 1180001541 | S.IC | TA78L08F(TE12LF) | T | 58.8/15.1 |
| Q1 | 1520000860 | S.TRA | 2SB1302S-TD-E | T | 42.8/19.2 |
| Q2 | 1590000680 | S.TRA | DTC114EUA T106 | T | 45.8/13.5 |
| Q101 | 1560001241 | S.FET | RD01MUS1-T113 | T | 5.9/66.4 |
| Q201 | 1590003051 | S.FET | PD55003-E | T | 20.5/53.1 |
| Q301 | 1590003350 | FET | SD2918 | | |
| Q401 | 1590003361 | FET | SD2931-12 | | |
| Q402 | 1590003361 | FET | SD2931-12 | | |
| D1 | 1730000561 | S.ZEN | RD2.7M-T2B-A B1 | T | 100.6/22.9 |
| D401 | 1750000271 | S.DIO | 1SS301(TE85LF) | T | 116.8/99.1 |
| D402 | 1750000271 | S.DIO | 1SS301(TE85LF) | T | 118.3/35.9 |
| D403 | 1750000271 | S.DIO | 1SS301(TE85LF) | T | 104.0/98.3 |
| D404 | 1750000271 | S.DIO | 1SS301(TE85LF) | T | 104.0/35.7 |
| L2 | 6200005011 | S.COI | NLV25T-100J | B | 4.7/40.0 |
| L3 | 6200005011 | S.COI | NLV25T-100J | B | 4.6/48.0 |
| L6 | 6200005011 | S.COI | NLV25T-100J | T | 109.3/91.1 |
| L7 | 6200010881 | S.COI | CDRH124NP-330MCI | T | 77.3/11.0 |
| L101 | 6200005131 | S.COI | NLC453232T-101K-PF | T | 5.6/59.6 |
| L102 | 6200007220 | S.COI | EXCCL4532U1 | T | 6.0/38.4 |
| L201 | 6180001240 | COI | LAL 04NA 820K | | |
| L202 | 6140004350 | COI | LR-475 | | |
| L301 | 6200003261 | S.COI | NLV32T-101J | T | 46.1/36.4 |
| L303 | 6200001831 | S.COI | NLV32T-100J | T | 87.0/26.2 |
| L304 | 2040000490 | COI | EXC-ELDR25C | | |
| L305 | 2040000490 | COI | EXC-ELDR25C | | |
| L306 | 6140004340 | COI | LR-474 | | |
| L307 | 6200001831 | S.COI | NLV32T-100J | T | 75.7/100.2 |
| L401 | 6200003261 | S.COI | NLV32T-101J | T | 100.4/98.3 |
| L402 | 6200003261 | S.COI | NLV32T-101J | T | 100.1/35.8 |
| L403 | 6140002590 | COI | LR-296 (TR18X8X8 D12A) | | |
| L404 | 6140000720 | COI | LR-95 | | |
| L501 | 6140002030 | COI | LR-230 (SK-10M-15Y 120) | | |
| R1 | 7030003440 | S.RES | ERJ3GEYJ 102 V (1K) | T | 42.8/12.8 |
| R2 | 7030003560 | S.RES | ERJ3GEYJ 103 V (10K) | T | 42.8/14.2 |
| R3 | 7510001740 | THE | DTN-C103F3H-STS-40 | | |
| R4 | 7030000380 | S.RES | MCR10EZHJ 1 K (102) | T | 39.7/22.5 |
| R5 | 7030008061 | S.RES | ERA3YED 222V (2.2K) | T | 104.3/23.1 |
| R6 | 7030007210 | S.RES | ERA3YEB 102V (1K) | T | 103.6/16.5 |
| R7 | 7030007210 | S.RES | ERA3YEB 102V (1K) | T | 103.6/17.8 |
| R101 | 7030003370 | S.RES | ERJ3GEYJ 271 V (270) | T | 6.0/87.2 |
| R102 | 7030003220 | S.RES | ERJ3GEYJ 150 V (15) | T | 3.9/86.1 |
| R103 | 7030003370 | S.RES | ERJ3GEYJ 271 V (270) | T | 6.0/85.0 |
| R104 | 7030003360 | S.RES | ERJ3GEYJ 221 V (220) | T | 4.8/71.3 |
| R105 | 7030003430 | S.RES | ERJ3GEYJ 821 V (820) | T | 6.0/73.3 |
| R106 | 7030003480 | S.RES | ERJ3GEYJ 222 V (2.2K) | T | 9.2/73.8 |
| R107 | 7030003440 | S.RES | ERJ3GEYJ 102 V (1K) | T | 2.2/64.7 |
| R108 | 7030003200 | S.RES | ERJ3GEYJ 100 V (10) | T | 9.2/68.3 |
| R110 | 7030000230 | S.RES | MCR10EZHJ 56 (560) | T | 11.3/56.6 |
| R111 | 7030003420 | S.RES | ERJ3GEYJ 681 V (680) | T | 13.4/58.7 |
| R112 | 7030003510 | S.RES | ERJ3GEYJ 392 V (3.9K) | T | 12.6/60.6 |
| R113 | 7030003500 | S.RES | ERJ3GEYJ 332 V (3.3K) | T | 6.8/75.2 |
| R115 | 7030003520 | S.RES | ERJ3GEYJ 472 V (4.7K) | T | 13.1/40.8 |
| R117 | 7030003530 | S.RES | ERJ3GEYJ 562 V (5.6K) | T | 7.7/76.5 |
| R118 | 7030003550 | S.RES | ERJ3GEYJ 822 V (8.2K) | T | 11.7/40.8 |
| R119 | 7030008240 | S.RES | ERJ12Y0R00U | T | 5.0/49.6 |
| R201 | 7030004050 | S.RES | ERJ3GEYJ 1R0 V (1) | T | 13.8/48.6 |
| R202 | 7030003410 | S.RES | ERJ3GEYJ 561 V (560) | T | 23.1/43.1 |
| R203 | 7030010800 | S.RES | ERJ1TYJ 2R7U (2.7) | T | 18.4/65.5 |
| R205 | 7030006260 | S.RES | ERJ12YJ471U (470) | T | 30.3/55.7 |
| R301 | 7310005210 | TRI | VM5CK-PVB 20K | | |
| R302 | 7030008180 | S.RES | ERJ12YJ331U (330) | T | 48.3/40.6 |
| R305 | 7030003530 | S.RES | ERJ3GEYJ 562 V (5.6K) | T | 49.6/43.5 |
| R307 | 7070000830 | RES | ERG3SJ 101 (100) | | |
| R309 | 7030010570 | S.RES | ERJ1TYJ 4R7U (4.7) | T | 80.0/45.8 |
| R310 | 7310005200 | TRI | VM5CK-PVB 2K | | |
| R312 | 7070000830 | RES | ERG3SJ 101 (100) | | |
| R401 | 7030010960 | S.RES | ERJ1TYJ 120U (12) | T | 89.8/90.7 |
| R402 | 7030010960 | S.RES | ERJ1TYJ 120U (12) | T | 93.5/90.7 |
| R403 | 7030010960 | S.RES | ERJ1TYJ 120U (12) | T | 97.2/90.7 |
| R404 | 7030010960 | S.RES | ERJ1TYJ 120U (12) | T | 90.9/43.3 |
| R405 | 7030010960 | S.RES | ERJ1TYJ 120U (12) | T | 94.6/43.3 |
| R406 | 7030010960 | S.RES | ERJ1TYJ 120U (12) | T | 98.3/43.3 |
| R407 | 7310005230 | TRI | VM5CK-PVB 10K | | |
| R408 | 7030000420 | S.RES | MCR10EZHJ 2.2K (222) | T | 116.3/96.0 |
| R409 | 7030000420 | S.RES | MCR10EZHJ 2.2K (222) | T | 116.3/38.0 |
| R410 | 7310005230 | TRI | VM5CK-PVB 10K | | |
| R411 | 7030010520 | S.RES | ERJ1TYJ 101U (100) | T | 107.6/93.9 |
| R412 | 7030010520 | S.RES | ERJ1TYJ 101U (100) | T | 107.6/40.2 |
| R413 | 7030010520 | S.RES | ERJ1TYJ 101U (100) | T | 111.3/93.9 |
| R414 | 7030010520 | S.RES | ERJ1TYJ 101U (100) | T | 111.3/40.2 |
| R416 | 7070000890 | RES | ERG3SJ 150 (15) | | |
| R418 | 7070001190 | RES | ERG3SJ180 (18) | | |
| R420 | 7070000890 | RES | ERG3SJ 150 (15) | | |
| R422 | 7070001190 | RES | ERG3SJ180 (18) | | |
| R423 | 7030003460 | S.RES | ERJ3GEYJ 152 V (1.5K) | T | 95.9/98.4 |
| R424 | 7030003460 | S.RES | ERJ3GEYJ 152 V (1.5K) | T | 99.4/33.7 |
| R425 | 7310005200 | TRI | VM5CK-PVB 2K | | |
| R426 | 7310005200 | TRI | VM5CK-PVB 2K | | |
| R427 | 7070001200 | RES | ERG3SJ100P (10) | | |
| R501 | 7070000890 | RES | ERG3SJ 150 (15) | | |
| R502 | 7070000890 | RES | ERG3SJ 150 (15) | | |
| R503 | 7030003500 | S.RES | ERJ3GEYJ 332 V (3.3K) | T | 171.8/16.7 |
| R504 | 7030003500 | S.RES | ERJ3GEYJ 332 V (3.3K) | T | 169.9/15.9 |
| R507 | 7030003500 | S.RES | ERJ3GEYJ 332 V (3.3K) | T | 139.1/17.9 |
| R508 | 7030003500 | S.RES | ERJ3GEYJ 332 V (3.3K) | T | 137.3/19.2 |
| R511 | 7070000890 | RES | ERG3SJ 150 (15) | | |
| R512 | 7070000890 | RES | ERG3SJ 150 (15) | | |

## [PA200W UNIT]

| REF NO. | PARTS NO. | DESCRIPTION | | M. | H/V LOCATION |
|---|---|---|---|---|---|
| R513 | 7070001000 | RES | ERG3SJ 821 (820) | | |
| R514 | 7070001000 | RES | ERG3SJ 821 (820) | | |
| R521 | 7030011160 | S.RES | RL7520WT-R010-F | T | 165.3/20.2 |
| R522 | 7030011160 | S.RES | RL7520WT-R010-F | T | 159.7/20.2 |
| R523 | 7030011160 | S.RES | RL7520WT-R010-F | T | 154.1/20.2 |
| C1 | 4030011600 | S.CER | C1608 JB 1E 104K-T | T | 18.9/18.0 |
| C2 | 4030006880 | S.CER | C1608 JB 1H 472K-T | T | 18.9/20.5 |
| C3 | 4030006880 | S.CER | C1608 JB 1H 472K-T | T | 18.9/23.0 |
| C6 | 4030006880 | S.CER | C1608 JB 1H 472K-T | T | 18.9/25.5 |
| C7 | 4030006900 | S.CER | C1608 JB 1H 103K-T | T | 70.0/6.8 |
| C8 | 4030006880 | S.CER | C1608 JB 1H 472K-T | T | 42.8/15.6 |
| C9 | 4030011600 | S.CER | C1608 JB 1E 104K-T | T | 57.6/11.4 |
| C10 | 4510008520 | S.ELE | EEE1CA470SP | T | 52.0/15.5 |
| C11 | 4030006900 | S.CER | C1608 JB 1H 103K-T | T | 60.4/11.4 |
| C12 | 4510008520 | S.ELE | EEE1CA470SP | T | 64.9/15.5 |
| C15 | 4030006880 | S.CER | C1608 JB 1H 472K-T | T | 104.3/20.4 |
| C16 | 4030006880 | S.CER | C1608 JB 1H 472K-T | T | 103.0/23.1 |
| C17 | 4510008550 | S.ELE | EEE1HA010SR | T | 95.9/22.8 |
| C102 | 4030017810 | S.CER | C1608 CH 1H 102J-T | T | 4.1/76.2 |
| C103 | 4030011600 | S.CER | C1608 JB 1E 104K-T | T | 9.2/72.5 |
| C104 | 4030011600 | S.CER | C1608 JB 1E 104K-T | T | 9.5/75.2 |
| C106 | 4030017320 | S.CER | GRM21BB11H104KA01L (GRM40-034) | T | 2.2/67.7 |
| C107 | 4030011600 | S.CER | C1608 JB 1E 104K-T | T | 9.2/70.9 |
| C108 | 4030017810 | S.CER | C1608 CH 1H 102J-T | T | 9.2/69.6 |
| C109 | 4030017320 | S.CER | GRM21BB11H104KA01L (GRM40-034) | T | 8.1/62.6 |
| C110 | 4030017810 | S.CER | C1608 CH 1H 102J-T | T | 9.0/64.2 |
| C111 | 4030017810 | S.CER | C1608 CH 1H 102J-T | T | 9.0/56.4 |
| C112 | 4030017320 | S.CER | GRM21BB11H104KA01L (GRM40-034) | T | 8.7/54.8 |
| C113 | 4030011600 | S.CER | C1608 JB 1E 104K-T | T | 5.3/102.5 |
| C114 | 4030011600 | S.CER | C1608 JB 1E 104K-T | T | 13.9/60.6 |
| C201 | 4030017320 | S.CER | GRM21BB11H104KA01L (GRM40-034) | T | 18.2/43.1 |
| C202 | 4030017810 | S.CER | C1608 CH 1H 102J-T | T | 15.7/61.3 |
| C204 | 4030008490 | S.CER | C2012 JB 1H 682K-T | T | 31.2/61.6 |
| C206 | 4030008700 | S.CER | GRM21BB11H473KA01L (GRM40 B) | T | 29.3/61.6 |
| C207 | 4030008700 | S.CER | GRM21BB11H473KA01L (GRM40 B) | T | 34.4/36.7 |
| C301 | 4030004760 | S.CER | C2012 JF 1H 104Z-T | T | 49.4/45.5 |
| C303 | 4030011600 | S.CER | C1608 JB 1E 104K-T | T | 43.4/35.4 |
| C305 | 4030004760 | S.CER | C2012 JF 1H 104Z-T | T | 44.4/42.6 |
| C307 | 4030017810 | S.CER | C1608 CH 1H 102J-T | T | 39.7/31.7 |
| C309 | 4030011600 | S.CER | C1608 JB 1E 104K-T | T | 41.1/31.7 |
| C311 | 4030018750 | S.CER | C3225 CH 2J 682K-T | T | 54.1/58.9 |
| C313 | 4030011600 | S.CER | C1608 JB 1E 104K-T | T | 89.1/26.9 |
| C314 | 4510008050 | ELE | 63 ME 220 CZ | | |
| C317 | 4030018790 | S.CER | C3225 JB 2E 104K-T | T | 76.8/34.0 |
| C318 | 4030011600 | S.CER | C1608 JB 1E 104K-T | T | 77.2/96.7 |
| C319 | 4030018790 | S.CER | C3225 JB 2E 104K-T | T | 70.4/79.0 |
| C401 | 4030011790 | S.CER | GRM55RF52A684ZD01L (GRM44-1) | T | 92.4/82.2 |
| C402 | 4030011790 | S.CER | GRM55RF52A684ZD01L (GRM44-1) | T | 92.4/51.8 |
| C403 | 4030011600 | S.CER | C1608 JB 1E 104K-T | T | 79.9/100.1 |
| C404 | 4030011600 | S.CER | C1608 JB 1E 104K-T | T | 88.7/30.4 |
| C405 | 4030006900 | S.CER | C1608 JB 1H 103K-T | T | 79.9/98.8 |
| C406 | 4030006900 | S.CER | C1608 JB 1H 103K-T | T | 88.7/31.7 |
| C407 | 4030017810 | S.CER | C1608 CH 1H 102J-T | T | 79.9/97.5 |
| C408 | 4030017810 | S.CER | C1608 CH 1H 102J-T | T | 88.7/33.0 |
| C409 | 4030018790 | S.CER | C3225 JB 2E 104K-T | T | 111.3/100.2 |
| C410 | 4030018790 | S.CER | C3225 JB 2E 104K-T | T | 111.3/33.9 |
| C411 | 4030006880 | S.CER | C1608 JB 1H 472K-T | T | 114.9/99.1 |
| C412 | 4030006880 | S.CER | C1608 JB 1H 472K-T | T | 116.3/35.0 |
| C413 | 4030011600 | S.CER | C1608 JB 1E 104K-T | T | 97.8/99.1 |
| C414 | 4030011600 | S.CER | C1608 JB 1E 104K-T | T | 97.4/36.6 |
| C415 | 4030011790 | S.CER | GRM55RF52A684ZD01L (GRM44-1) | T | 102.8/88.8 |
| C416 | 4030011790 | S.CER | GRM55RF52A684ZD01L (GRM44-1) | T | 103.9/49.0 |
| C417 | 4030018760 | S.CER | C4532 CH 2A 104K-T | T | 190.2/82.6 |
| C418 | 4030018760 | S.CER | C4532 CH 2A 104K-T | T | 193.9/82.6 |
| C419 | 4030018760 | S.CER | C4532 CH 2A 104K-T | T | 190.2/53.4 |
| C420 | 4030018760 | S.CER | C4532 CH 2A 104K-T | T | 193.9/53.4 |
| C501 | 4030018790 | S.CER | C3225 JB 2E 104K-T | T | 183.8/32.0 |
| C502 | 4030018780 | S.CER | C3225 JB 2J 473K-T | T | 180.4/32.0 |
| C503 | 4030018770 | S.CER | C3216 CH 2J 102J-T | T | 177.3/32.0 |
| C504 | 4510006830 | ELE | 63 ME 470CZ | | |
| C505 | 4510006830 | ELE | 63 ME 470CZ | | |
| C506 | 4030006880 | S.CER | C1608 JB 1H 472K-T | T | 173.7/15.9 |
| C507 | 4030006880 | S.CER | C1608 JB 1H 472K-T | T | 137.2/17.0 |
| C510 | 4030018790 | S.CER | C3225 JB 2E 104K-T | T | 170.2/13.6 |
| C511 | 4030018780 | S.CER | C3225 JB 2J 473K-T | T | 170.2/10.6 |
| C512 | 4030018770 | S.CER | C3216 CH 2J 102J-T | T | 170.0/7.3 |
| C513 | 4510008050 | ELE | 63 ME 220 CZ | | |
| C514 | 4030011790 | S.CER | GRM55RF52A684ZD01L (GRM44-1) | T | 164.8/6.7 |
| C515 | 4030011790 | S.CER | GRM55RF52A684ZD01L (GRM44-1) | T | 148.5/6.7 |
| J1 | 6510028210 | CON | SJ050010 (TMP-J01X-V6) | | |
| J2 | 6510022311 | S.CON | B5B-PH-SM4-TB(LF)(SN) | T | 6.0/23.0 |
| J5 | 6510020421 | S.CON | S4B-PH-SM4-TB(LF)(SN) | T | 93.0/4.5 |
| J401 | 6510017920 | CON | 1811P342 | | |
| J402 | 6910001040 | CON | IPS-1136 | | |
| W401 | 9025900670 | WIR | 23/05/060/B21/W07 | | |
| W501 | 9040401001 | JUM | 74/98/050/X98/X98 | | |

Eqv.= This component is equivalent to the REF No. component listed above, and may be substituted on parts orders and repairs.

M.=Mounted side (T: Mounted on the Top side, B: Mounted on the Bottom side)
S.=Surface mount

## [PA200W UNIT]

| REF NO. | PARTS NO. | DESCRIPTION | | M. | H/V LOCATION |
|---|---|---|---|---|---|
| EP501 | 6910011330 | TER | OT-009 M3 | | |
| EP502 | 6910011330 | TER | OT-009 M3 | | |
| EP503 | 6910000640 | BEA | FSRH090160RN000B (FSOH090RN) | | |

## [DC-DC UNIT]

| REF NO. | PARTS NO. | DESCRIPTION | | M. | H/V LOCATION |
|---|---|---|---|---|---|
| D21 | 1750000960 | S.DIO | RB081L-20 | B | 28.5/45.9 |
| L21 | 6200003950 | S.COI | HF50ACC 322513-T | B | 211.7/124.6 |
| L22 | 6200010891 | S.COI | CDRH124NP-150MCI | B | 169.7/124.5 |
| L81 | 6200003950 | S.COI | HF50ACC 322513-T | B | 142.1/109.7 |
| L82 | 6200010901 | S.COI | CDRH104RNP-100NCI | B | 139.1/107.3 |
| L102 | 6200010881 | S.COI | CDRH124NP-330MCI | T | 20.9/66.5 |
| L103 | 6190001191 | S.COI | D10F-#A814AY-101K | T | 15.2/66.4 |
| C122 | 4030011600 | S.CER | C1608 JB 1E 104K-T | B | 74.3/70.4 |
| C124 | 4030006880 | S.CER | C1608 JB 1H 472K-T | B | 77.4/68.9 |
| RL142 | 6330001760 | REL | AW3023 | | |
| J2 | 6510003471 | CON | B11B-EH-S(LF)(SN) | | |
| J3 | 6510003431 | CON | B07B-EH-S(LF)(SN) | | |
| J4 | 6510003461 | CON | B10B-EH-S(LF)(SN) | | |
| W1 | 8900012780 | CAB | OPC-1298 | | |

Eqv.= This component is equivalent to the REF No. component listed above, and may be substituted on parts orders and repairs.

M.=Mounted side (T: Mounted on the Top side, B: Mounted on the Bottom side)
S.=Surface mount

## [CTRL UNIT]

| REF NO. | PARTS NO. | DESCRIPTION | | M. | H/V LOCATION |
|---|---|---|---|---|---|
| IC1 | 1140004120 | S.IC | M38022M2-138FP | T | 65.7/81.8 |
| IC2 | 1130016410 | S.IC | BR24T16FVT-WE2 | T | 54.0/86.9 |
| IC3 | 1130003921 | S.IC | TC4S69F(TE85RF) | T | 55.9/58.2 |
| IC4 | 1180001072 | S.IC | TA7805F(TE16L1NQ) | B | 63.0/57.7 |
| IC5 | 1130009691 | S.IC | TC74HCT7007AF(F) S | B | 92.5/91.6 |
| IC6 | 1130006441 | S.IC | TC7S08F(TE85RF) | T | 81.7/70.3 |
| IC51 | 1130011530 | S.IC | CD74HC4094M96 | T | 42.2/72.4 |
| IC52 | 1130007690 | S.IC | BU4066BCF-E2 | B | 12.5/76.9 |
| IC55 | 1130011530 | S.IC | CD74HC4094M96 | B | 100.2/76.2 |
| IC56 | 1130011530 | S.IC | CD74HC4094M96 | B | 114.4/76.2 |
| IC57 | 1160000132 | S.IC | TD62783AFG(OSEL) | T | 99.6/73.2 |
| IC58 | 1160000132 | S.IC | TD62783AFG(OSEL) | T | 113.8/73.2 |
| IC101 | 1110000960 | S.IC | NJM4558M-TE1-#FMZB | T | 19.4/37.8 |
| IC151 | 1120002301 | S.IC | TC74AC04F(F) S | B | 35.3/44.3 |
| IC153 | 1130012011 | S.IC | TC7SZ32F(TE85LF) | T | 31.2/47.3 |
| IC154 | 1130012011 | S.IC | TC7SZ32F(TE85LF) | T | 42.4/45.8 |
| IC155 | 1130012011 | S.IC | TC7SZ32F(TE85LF) | T | 36.0/47.5 |
| IC156 | 1130012021 | S.IC | TC74ACT112F(ELF) | T | 38.4/56.5 |
| IC201 | 1110000960 | S.IC | NJM4558M-TE1-#FMZB | T | 19.0/54.7 |
| IC301 | 1110002690 | S.IC | NJM2903M-TE1-#FMZB | T | 73.4/59.0 |
| IC401 | 1160000132 | S.IC | TD62783AFG(OSEL) | T | 13.6/86.1 |
| IC402 | 1160000132 | S.IC | TD62783AFG(OSEL) | T | 31.6/84.7 |
| Q1 | 1590001330 | S.TRA | DTA114EUA T106 | T | 78.5/75.3 |
| Q2 | 1590000680 | S.TRA | DTC114EUA T106 | T | 77.8/71.2 |
| Q3 | 1590000680 | S.TRA | DTC114EUA T106 | T | 128.4/74.5 |
| Q4 | 1590000680 | S.TRA | DTC114EUA T106 | T | 128.4/77.0 |
| Q5 | 1590000680 | S.TRA | DTC114EUA T106 | T | 128.4/81.3 |
| Q6 | 1590000680 | S.TRA | DTC114EUA T106 | T | 128.4/83.8 |
| Q7 | 1590000680 | S.TRA | DTC114EUA T106 | T | 128.4/88.5 |
| Q8 | 1590000680 | S.TRA | DTC114EUA T106 | T | 128.4/91.0 |
| Q9 | 1590000680 | S.TRA | DTC114EUA T106 | T | 128.4/95.7 |
| Q10 | 1590000680 | S.TRA | DTC114EUA T106 | T | 128.4/100.5 |
| Q11 | 1590000680 | S.TRA | DTC114EUA T106 | B | 85.8/99.9 |
| Q51 | 1590000680 | S.TRA | DTC114EUA T106 | T | 6.1/78.6 |
| Q52 | 1590000680 | S.TRA | DTC114EUA T106 | T | 12.5/78.6 |
| Q53 | 1590000680 | S.TRA | DTC114EUA T106 | B | 6.6/72.8 |
| Q54 | 1560001260 | S.FET | 2SK3018 T106 | B | 121.2/80.2 |
| Q55 | 1590000680 | S.TRA | DTC114EUA T106 | B | 130.2/68.9 |
| Q59 | 1590000680 | S.TRA | DTC114EUA T106 | T | 56.9/69.5 |
| Q201 | 1560000871 | S.FET | 2SK515-T1B-A (X33) | T | 52.6/43.0 |
| Q251 | 1590000680 | S.TRA | DTC114EUA T106 | T | 74.2/34.9 |
| D1 | 1730000411 | S.ZEN | RD5.1M-T2B-A B2 | T | 63.4/58.4 |
| D2 | 1750002160 | S.DIO | DA2J10800L | T | 67.7/55.9 |
| D3 | 1750000201 | S.DIO | 1SS319(TE85RF) | B | 129.5/98.1 |
| D4 | 1750000201 | S.DIO | 1SS319(TE85RF) | B | 129.5/90.0 |
| D5 | 1750000201 | S.DIO | 1SS319(TE85RF) | B | 129.5/82.8 |
| D6 | 1750000201 | S.DIO | 1SS319(TE85RF) | B | 129.5/76.0 |
| D7 | 1730000031 | S.ZEN | RD5.6M-T2B-A B2 | T | 63.6/54.9 |
| D101 | 1790000491 | S.DIO | HSM88ASTR-E | T | 14.8/24.4 |
| D102 | 1790000491 | S.DIO | HSM88ASTR-E | T | 25.7/29.6 |
| D103 | 1750000201 | S.DIO | 1SS319(TE85RF) | T | 19.3/42.1 |
| D151 | 1790000491 | S.DIO | HSM88ASTR-E | T | 32.0/38.2 |
| D152 | 1790000491 | S.DIO | HSM88ASTR-E | T | 39.4/38.2 |
| D153 | 1790000491 | S.DIO | HSM88ASTR-E | T | 28.4/57.2 |
| D154 | 1790000491 | S.DIO | HSM88ASTR-E | T | 29.6/53.4 |
| D201 | 1790000491 | S.DIO | HSM88ASTR-E | T | 57.7/37.3 |
| D202 | 1790000491 | S.DIO | HSM88ASTR-E | T | 48.5/37.1 |
| D203 | 1750000201 | S.DIO | 1SS319(TE85RF) | T | 18.0/60.9 |
| D251 | 1750000271 | S.DIO | 1SS301(TE85LF) | T | 72.1/36.5 |
| D301 | 1790000491 | S.DIO | HSM88ASTR-E | T | 81.5/58.3 |
| D302 | 1790000491 | S.DIO | HSM88ASTR-E | T | 88.4/59.6 |
| X1 | 6050009890 | S.XTA | CR-569 SMD-49 6.144 MHz <KDS> | T | 83.2/79.5 |
| L1 | 6200003261 | S.COI | NLV32T-101J | T | 14.7/18.0 |
| L2 | 6200003261 | S.COI | NLV32T-101J | T | 14.7/20.5 |
| L4 | 2040000490 | COI | EXC-ELDR25C | | |
| L7 | 6200003590 | S.COI | EXCCL3225U1 | T | 106.3/91.2 |
| L8 | 6200003590 | S.COI | EXCCL3225U1 | T | 103.3/91.1 |
| L9 | 6200003950 | S.COI | HF50ACC 322513-T | B | 92.0/101.0 |
| L51 | 6200003261 | S.COI | NLV32T-101J | B | 120.5/26.0 |
| L52 | 6200005131 | S.COI | NLC453232T-101K-PF | B | 126.5/39.5 |
| L101 | 6140004410 | COI | LR-502 | | |
| L151 | 6140004410 | COI | LR-502 | | |
| L152 | 6200001831 | S.COI | NLV32T-100J | T | 41.4/63.0 |
| L201 | 6140004410 | COI | LR-502 | | |
| L202 | 6180003300 | COI | T6-222J (2.2M) | | |
| L301 | 6140004410 | COI | LR-502 | | |
| L302 | 6200003261 | S.COI | NLV32T-101J | B | 69.4/61.2 |
| L401 | 6200003950 | S.COI | HF50ACC 322513-T | T | 26.4/101.5 |
| L402 | 6200003950 | S.COI | HF50ACC 322513-T | T | 18.5/101.5 |
| R2 | 7030003680 | S.RES | ERJ3GEYJ 104 V (100K) | T | 63.0/71.0 |
| R3 | 7030003680 | S.RES | ERJ3GEYJ 104 V (100K) | T | 64.3/71.0 |
| R4 | 7030003680 | S.RES | ERJ3GEYJ 104 V (100K) | T | 65.6/71.0 |
| R5 | 7030003680 | S.RES | ERJ3GEYJ 104 V (100K) | T | 66.9/71.0 |
| R6 | 7030003560 | S.RES | ERJ3GEYJ 103 V (10K) | T | 74.7/71.0 |
| R7 | 7030003440 | S.RES | ERJ3GEYJ 102 V (1K) | T | 73.4/71.0 |
| R8 | 7030003680 | S.RES | ERJ3GEYJ 104 V (100K) | T | 55.4/72.8 |
| R9 | 7030003680 | S.RES | ERJ3GEYJ 104 V (100K) | T | 54.7/74.7 |
| R10 | 7030003680 | S.RES | ERJ3GEYJ 104 V (100K) | T | 57.3/72.9 |
| R11 | 7030003680 | S.RES | ERJ3GEYJ 104 V (100K) | T | 53.4/74.7 |
| R12 | 7030003440 | S.RES | ERJ3GEYJ 102 V (1K) | T | 78.3/83.9 |
| R13 | 7030003680 | S.RES | ERJ3GEYJ 104 V (100K) | T | 76.6/75.6 |
| R14 | 7030003680 | S.RES | ERJ3GEYJ 104 V (100K) | T | 78.5/78.2 |
| R15 | 7030003440 | S.RES | ERJ3GEYJ 102 V (1K) | T | 55.6/60.7 |
| R16 | 7030003320 | S.RES | ERJ3GEYJ 101 V (100) | T | 54.8/55.2 |

## [CTRL UNIT]

| REF NO. | PARTS NO. | DESCRIPTION | | M. | H/V LOCATION |
|---|---|---|---|---|---|
| R17 | 7030003560 | S.RES | ERJ3GEYJ 103 V (10K) | T | 54.1/82.3 |
| R18 | 7030003560 | S.RES | ERJ3GEYJ 103 V (10K) | T | 54.1/81.0 |
| R19 | 7030003680 | S.RES | ERJ3GEYJ 104 V (100K) | T | 58.3/58.2 |
| R20 | 7030003570 | S.RES | ERJ3GEYJ 123 V (12K) | T | 59.6/60.6 |
| R21 | 7030003650 | S.RES | ERJ3GEYJ 563 V (56K) | T | 59.6/58.2 |
| R22 | 7030003450 | S.RES | ERJ3GEYJ 122 V (1.2K) | T | 66.3/58.5 |
| R23 | 7030003560 | S.RES | ERJ3GEYJ 103 V (10K) | B | 105.1/100.0 |
| R24 | 7030003440 | S.RES | ERJ3GEYJ 102 V (1K) | B | 103.0/98.8 |
| R25 | 7030003380 | S.RES | ERJ3GEYJ 331 V (330) | B | 126.0/99.1 |
| R26 | 7030003380 | S.RES | ERJ3GEYJ 331 V (330) | B | 126.0/97.1 |
| R27 | 7030003380 | S.RES | ERJ3GEYJ 331 V (330) | B | 126.0/91.0 |
| R28 | 7030003380 | S.RES | ERJ3GEYJ 331 V (330) | B | 126.0/89.0 |
| R29 | 7030003380 | S.RES | ERJ3GEYJ 331 V (330) | B | 126.0/83.8 |
| R30 | 7030003380 | S.RES | ERJ3GEYJ 331 V (330) | B | 126.0/81.8 |
| R31 | 7030003380 | S.RES | ERJ3GEYJ 331 V (330) | B | 126.0/77.0 |
| R32 | 7030003380 | S.RES | ERJ3GEYJ 331 V (330) | B | 126.0/75.0 |
| R40 | 7030003440 | S.RES | ERJ3GEYJ 102 V (1K) | T | 61.2/99.9 |
| R42 | 7030003860 | S.RES | ERJ3GE JPW V | T | 60.4/71.0 |
| R43 | 7030003860 | S.RES | ERJ3GE JPW V | T | 60.7/69.0 |
| R44 | 7030003860 | S.RES | ERJ3GE JPW V | T | 68.2/71.0 |
| R45 | 7030003860 | S.RES | ERJ3GE JPW V | T | 65.7/68.5 |
| R46 | 7030003860 | S.RES | ERJ3GE JPW V | T | 70.6/68.9 |
| R51 | 7030003440 | S.RES | ERJ3GEYJ 102 V (1K) | B | 35.8/80.2 |
| R52 | 7030003440 | S.RES | ERJ3GEYJ 102 V (1K) | B | 34.3/80.2 |
| R53 | 7030003440 | S.RES | ERJ3GEYJ 102 V (1K) | B | 32.8/80.2 |
| R54 | 7030003440 | S.RES | ERJ3GEYJ 102 V (1K) | B | 31.2/80.2 |
| R55 | 7030003440 | S.RES | ERJ3GEYJ 102 V (1K) | B | 29.6/80.2 |
| R56 | 7030003440 | S.RES | ERJ3GEYJ 102 V (1K) | B | 28.0/80.2 |
| R57 | 7030003440 | S.RES | ERJ3GEYJ 102 V (1K) | B | 26.4/80.2 |
| R58 | 7030003440 | S.RES | ERJ3GEYJ 102 V (1K) | B | 24.8/80.2 |
| R59 | 7030003440 | S.RES | ERJ3GEYJ 102 V (1K) | T | 18.3/78.7 |
| R60 | 7030003440 | S.RES | ERJ3GEYJ 102 V (1K) | T | 17.0/76.0 |
| R61 | 7030003440 | S.RES | ERJ3GEYJ 102 V (1K) | T | 15.7/76.0 |
| R62 | 7030003440 | S.RES | ERJ3GEYJ 102 V (1K) | T | 14.4/78.7 |
| R63 | 7030003440 | S.RES | ERJ3GEYJ 102 V (1K) | T | 10.6/78.7 |
| R64 | 7030003440 | S.RES | ERJ3GEYJ 102 V (1K) | T | 9.3/74.8 |
| R65 | 7030003440 | S.RES | ERJ3GEYJ 102 V (1K) | T | 8.0/74.8 |
| R66 | 7030003520 | S.RES | ERJ3GEYJ 472 V (4.7K) | B | 15.6/81.6 |
| R67 | 7030003200 | S.RES | ERJ3GEYJ 100 V (10) | T | 99.8/90.4 |
| R68 | 7030003200 | S.RES | ERJ3GEYJ 100 V (10) | T | 98.5/90.4 |
| R69 | 7030003200 | S.RES | ERJ3GEYJ 100 V (10) | T | 97.2/90.4 |
| R70 | 7030004040 | S.RES | ERJ3GEYJ 4R7 V (4.7) | T | 104.8/65.9 |
| R71 | 7030004040 | S.RES | ERJ3GEYJ 4R7 V (4.7) | T | 103.5/65.9 |
| R72 | 7030004040 | S.RES | ERJ3GEYJ 4R7 V (4.7) | T | 102.2/65.9 |
| R73 | 7030004040 | S.RES | ERJ3GEYJ 4R7 V (4.7) | T | 100.9/65.9 |
| R74 | 7030004040 | S.RES | ERJ3GEYJ 4R7 V (4.7) | T | 99.6/65.9 |
| R75 | 7030004040 | S.RES | ERJ3GEYJ 4R7 V (4.7) | T | 98.3/65.9 |
| R76 | 7030004040 | S.RES | ERJ3GEYJ 4R7 V (4.7) | T | 97.0/65.9 |
| R77 | 7030004040 | S.RES | ERJ3GEYJ 4R7 V (4.7) | T | 95.7/65.9 |
| R78 | 7030004040 | S.RES | ERJ3GEYJ 4R7 V (4.7) | B | 120.1/64.6 |
| R84 | 7030004040 | S.RES | ERJ3GEYJ 4R7 V (4.7) | B | 110.5/64.6 |
| R85 | 7030004040 | S.RES | ERJ3GEYJ 4R7 V (4.7) | B | 108.9/64.6 |
| R86 | 7030003560 | S.RES | ERJ3GEYJ 103 V (10K) | B | 116.2/83.6 |
| R87 | 7030003860 | S.RES | ERJ3GE JPW V | T | 32.5/76.0 |
| R88 | 7030003860 | S.RES | ERJ3GE JPW V | T | 31.2/76.0 |
| R89 | 7030003860 | S.RES | ERJ3GE JPW V | T | 29.9/76.0 |
| R90 | 7030003860 | S.RES | ERJ3GE JPW V | T | 28.6/76.0 |
| R91 | 7030003860 | S.RES | ERJ3GE JPW V | T | 27.3/76.0 |
| R92 | 7030003860 | S.RES | ERJ3GE JPW V | T | 26.0/76.0 |
| R95 | 7030003860 | S.RES | ERJ3GE JPW V | T | 15.7/78.7 |
| R97 | 7030003860 | S.RES | ERJ3GE JPW V | T | 8.0/78.7 |
| R101 | 7030010950 | S.RES | ERJ1TYJ 100U (10) | T | 18.6/29.5 |
| R102 | 7030010950 | S.RES | ERJ1TYJ 100U (10) | T | 22.3/29.5 |
| R103 | 7030003560 | S.RES | ERJ3GEYJ 103 V (10K) | T | 12.2/34.8 |
| R104 | 7030003560 | S.RES | ERJ3GEYJ 103 V (10K) | T | 27.7/35.0 |
| R105 | 7030003720 | S.RES | ERJ3GEYJ 224 V (220K) | T | 12.2/37.4 |
| R106 | 7030003720 | S.RES | ERJ3GEYJ 224 V (220K) | T | 25.0/36.7 |
| R107 | 7030003660 | S.RES | ERJ3GEYJ 683 V (68K) | T | 14.1/36.5 |
| R108 | 7030003660 | S.RES | ERJ3GEYJ 683 V (68K) | T | 23.2/34.8 |
| R109 | 7030003720 | S.RES | ERJ3GEYJ 224 V (220K) | T | 13.3/38.7 |
| R110 | 7030003720 | S.RES | ERJ3GEYJ 224 V (220K) | T | 25.0/37.9 |
| R111 | 7030009340 | S.RES | ERJ3GEYJ 275V (2.7M) | T | 13.7/40.6 |
| R112 | 7030003810 | S.RES | ERJ3GEYJ 125 V (1.2M) | T | 25.0/39.1 |
| R115 | 7030009340 | S.RES | ERJ3GEYJ 275V (2.7M) | T | 12.4/40.6 |
| R151 | 7030007190 | S.RES | ERJ12YJ220U (22) | T | 37.6/27.2 |
| R152 | 7030010620 | S.RES | ERJ12YJ180U (18) | B | 38.1/26.8 |
| R153 | 7030007190 | S.RES | ERJ12YJ220U (22) | T | 37.6/31.8 |
| R154 | 7030010620 | S.RES | ERJ12YJ180U (18) | B | 38.1/31.8 |
| R155 | 7030003320 | S.RES | ERJ3GEYJ 101 V (100) | T | 37.0/39.6 |
| R157 | 7030003320 | S.RES | ERJ3GEYJ 101 V (100) | T | 30.4/40.2 |
| R158 | 7030003560 | S.RES | ERJ3GEYJ 103 V (10K) | T | 31.9/41.6 |
| R159 | 7030003560 | S.RES | ERJ3GEYJ 103 V (10K) | T | 38.4/41.5 |
| R160 | 7030003280 | S.RES | ERJ3GEYJ 470 V (47) | T | 30.0/42.3 |
| R161 | 7030003280 | S.RES | ERJ3GEYJ 470 V (47) | T | 39.7/43.0 |
| R162 | 7030003440 | S.RES | ERJ3GEYJ 102 V (1K) | T | 30.9/44.9 |
| R163 | 7030003440 | S.RES | ERJ3GEYJ 102 V (1K) | T | 42.0/43.3 |
| R164 | 7030003280 | S.RES | ERJ3GEYJ 470 V (47) | T | 33.6/47.7 |
| R165 | 7030003280 | S.RES | ERJ3GEYJ 470 V (47) | T | 39.2/46.4 |
| R166 | 7030003440 | S.RES | ERJ3GEYJ 102 V (1K) | T | 34.3/44.7 |
| R167 | 7030003440 | S.RES | ERJ3GEYJ 102 V (1K) | T | 39.2/45.1 |
| R168 | 7030003280 | S.RES | ERJ3GEYJ 470 V (47) | T | 38.8/49.8 |
| R169 | 7030003440 | S.RES | ERJ3GEYJ 102 V (1K) | T | 38.8/51.1 |
| R170 | 7030003280 | S.RES | ERJ3GEYJ 470 V (47) | T | 31.5/58.2 |
| R171 | 7030003280 | S.RES | ERJ3GEYJ 470 V (47) | T | 31.5/56.9 |
| R172 | 7030003480 | S.RES | ERJ3GEYJ 222 V (2.2K) | T | 32.0/53.7 |
| R173 | 7030003500 | S.RES | ERJ3GEYJ 332 V (3.3K) | T | 27.2/54.9 |
| R174 | 7030003360 | S.RES | ERJ3GEYJ 221 V (220) | T | 27.2/52.3 |
| R201 | 7030010420 | S.RES | ERJ1TYJ 560U (56) | T | 49.1/29.7 |
| R202 | 7030010420 | S.RES | ERJ1TYJ 560U (56) | B | 49.4/29.4 |
| R203 | 7030010420 | S.RES | ERJ1TYJ 560U (56) | T | 49.1/33.7 |
| R204 | 7030010420 | S.RES | ERJ1TYJ 560U (56) | B | 49.4/34.0 |
| R205 | 7030003560 | S.RES | ERJ3GEYJ 103 V (10K) | T | 52.3/45.4 |
| R206 | 7030003560 | S.RES | ERJ3GEYJ 103 V (10K) | T | 57.4/41.5 |
| R207 | 7030003800 | S.RES | ERJ3GEYJ 105 V (1M) | T | 50.1/41.9 |
| R208 | 7030003560 | S.RES | ERJ3GEYJ 103 V (10K) | T | 54.8/42.6 |

Eqv.= This component is equivalent to the REF No. component listed above, and may be substituted on parts orders and repairs.

M.=Mounted side (T: Mounted on the Top side, B: Mounted on the Bottom side)
S.=Surface mount

## [CTRL UNIT]

| REF NO. | PARTS NO. | DESCRIPTION | | M. | H/V LOCATION |
|---|---|---|---|---|---|
| R209 | 7030003520 | S.RES | ERJ3GEYJ 472 V (4.7K) | T | 54.8/40.0 |
| R210 | 7030003440 | S.RES | ERJ3GEYJ 102 V (1K) | T | 56.1/42.7 |
| R211 | 7030003480 | S.RES | ERJ3GEYJ 222 V (2.2K) | T | 13.1/49.4 |
| R212 | 7030003560 | S.RES | ERJ3GEYJ 103 V (10K) | T | 25.1/49.4 |
| R213 | 7030005331 | S.RES | ERA3YED 562V (5.6K) | T | 17.8/50.0 |
| R214 | 7030005331 | S.RES | ERA3YED 562V (5.6K) | T | 16.5/50.0 |
| R215 | 7030005871 | S.RES | ERA3YKD 104V (100K) | T | 14.0/53.0 |
| R216 | 7030008121 | S.RES | ERA3YED 682V (6.8K) | T | 20.7/50.0 |
| R217 | 7030008121 | S.RES | ERA3YED 682V (6.8K) | T | 22.3/48.1 |
| R218 | 7030005871 | S.RES | ERA3YKD 104V (100K) | T | 23.8/52.0 |
| R221 | 7030003670 | S.RES | ERJ3GEYJ 823 V (82K) | B | 17.1/57.0 |
| R222 | 7030003680 | S.RES | ERJ3GEYJ 104 V (100K) | T | 20.9/51.3 |
| R223 | 7030003820 | S.RES | ERJ3GEYJ 155 V (1.5M) | T | 14.0/55.8 |
| R224 | 7030003820 | S.RES | ERJ3GEYJ 155 V (1.5M) | T | 23.8/54.6 |
| R225 | 7030003560 | S.RES | ERJ3GEYJ 103 V (10K) | T | 14.0/61.4 |
| R226 | 7030003560 | S.RES | ERJ3GEYJ 103 V (10K) | T | 21.9/61.4 |
| R227 | 7030003560 | S.RES | ERJ3GEYJ 103 V (10K) | T | 14.7/63.4 |
| R228 | 7030003560 | S.RES | ERJ3GEYJ 103 V (10K) | T | 21.3/63.4 |
| R252 | 7030000230 | S.RES | MCR10EZHJ 56 (560) | T | 70.8/31.9 |
| R253 | 7030000230 | S.RES | MCR10EZHJ 56 (560) | T | 69.9/35.2 |
| R254 | 7030000230 | S.RES | MCR10EZHJ 56 (560) | T | 70.8/38.7 |
| R255 | 7030000220 | S.RES | MCR10EZHJ 47 (470) | T | 72.2/40.8 |
| R256 | 7030000230 | S.RES | MCR10EZHJ 56 (560) | T | 72.4/31.0 |
| R301 | 7030003560 | S.RES | ERJ3GEYJ 103 V (10K) | T | 83.7/57.6 |
| R302 | 7030003670 | S.RES | ERJ3GEYJ 823 V (82K) | T | 81.9/61.3 |
| R303 | 7030010910 | S.RES | ERJ1TYJ 150U (15) | B | 90.1/60.7 |
| R304 | 7030003560 | S.RES | ERJ3GEYJ 103 V (10K) | T | 85.6/62.0 |
| R305 | 7030003720 | S.RES | ERJ3GEYJ 224 V (220K) | T | 80.6/61.3 |
| R306 | 7030003660 | S.RES | ERJ3GEYJ 683 V (68K) | T | 78.7/57.2 |
| R307 | 7030003660 | S.RES | ERJ3GEYJ 683 V (68K) | T | 79.2/59.8 |
| R308 | 7030003840 | S.RES | ERJ3GEYJ 225 V (2.2M) | B | 76.5/58.3 |
| R309 | 7030003720 | S.RES | ERJ3GEYJ 224 V (220K) | T | 76.2/53.9 |
| R310 | 7030003840 | S.RES | ERJ3GEYJ 225 V (2.2M) | T | 73.4/54.0 |
| R311 | 7030003440 | S.RES | ERJ3GEYJ 102 V (1K) | T | 76.0/55.5 |
| R312 | 7030003560 | S.RES | ERJ3GEYJ 103 V (10K) | T | 73.4/55.5 |
| R313 | 7030003700 | S.RES | ERJ3GEYJ 154 V (150K) | T | 78.5/61.7 |
| R345 | 7030003560 | S.RES | ERJ3GEYJ 103 V (10K) | T | 88.4/83.7 |
| R401 | 7030004040 | S.RES | ERJ3GEYJ 4R7 V (4.7) | T | 17.5/93.4 |
| R402 | 7030004040 | S.RES | ERJ3GEYJ 4R7 V (4.7) | T | 16.2/93.4 |
| R403 | 7030004040 | S.RES | ERJ3GEYJ 4R7 V (4.7) | T | 14.9/93.4 |
| R404 | 7030004040 | S.RES | ERJ3GEYJ 4R7 V (4.7) | T | 13.6/93.4 |
| R405 | 7030004040 | S.RES | ERJ3GEYJ 4R7 V (4.7) | T | 12.3/93.4 |
| R406 | 7030004040 | S.RES | ERJ3GEYJ 4R7 V (4.7) | T | 11.0/93.4 |
| R407 | 7030004040 | S.RES | ERJ3GEYJ 4R7 V (4.7) | T | 9.7/93.4 |
| R408 | 7030004040 | S.RES | ERJ3GEYJ 4R7 V (4.7) | T | 8.4/93.4 |
| R409 | 7030004040 | S.RES | ERJ3GEYJ 4R7 V (4.7) | B | 36.6/86.7 |
| R410 | 7030004040 | S.RES | ERJ3GEYJ 4R7 V (4.7) | B | 35.1/86.7 |
| R411 | 7030004040 | S.RES | ERJ3GEYJ 4R7 V (4.7) | B | 33.6/86.7 |
| R412 | 7030004040 | S.RES | ERJ3GEYJ 4R7 V (4.7) | B | 32.0/86.7 |
| R413 | 7030004040 | S.RES | ERJ3GEYJ 4R7 V (4.7) | B | 30.4/86.7 |
| R414 | 7030004040 | S.RES | ERJ3GEYJ 4R7 V (4.7) | B | 28.8/86.7 |
| R415 | 7030004040 | S.RES | ERJ3GEYJ 4R7 V (4.7) | B | 27.2/86.7 |
| R416 | 7030004040 | S.RES | ERJ3GEYJ 4R7 V (4.7) | B | 25.6/86.7 |
| R417 | 7030003440 | S.RES | ERJ3GEYJ 102 V (1K) | B | 31.3/98.5 |
| R418 | 7030003440 | S.RES | ERJ3GEYJ 102 V (1K) | B | 44.8/98.5 |
| R419 | 7030003440 | S.RES | ERJ3GEYJ 102 V (1K) | B | 32.9/98.5 |
| R420 | 7030003440 | S.RES | ERJ3GEYJ 102 V (1K) | B | 46.4/98.5 |
| R421 | 7030003440 | S.RES | ERJ3GEYJ 102 V (1K) | B | 34.5/98.5 |
| R422 | 7030003440 | S.RES | ERJ3GEYJ 102 V (1K) | B | 48.0/98.5 |
| R423 | 7030003440 | S.RES | ERJ3GEYJ 102 V (1K) | B | 36.1/98.5 |
| R424 | 7030003440 | S.RES | ERJ3GEYJ 102 V (1K) | B | 49.6/98.5 |
| R425 | 7030003440 | S.RES | ERJ3GEYJ 102 V (1K) | B | 37.7/98.5 |
| R426 | 7030003440 | S.RES | ERJ3GEYJ 102 V (1K) | B | 51.2/98.5 |
| R427 | 7030003440 | S.RES | ERJ3GEYJ 102 V (1K) | B | 39.3/98.5 |
| R428 | 7030003440 | S.RES | ERJ3GEYJ 102 V (1K) | B | 52.8/98.5 |
| R429 | 7030003440 | S.RES | ERJ3GEYJ 102 V (1K) | B | 40.9/98.5 |
| R430 | 7030003440 | S.RES | ERJ3GEYJ 102 V (1K) | B | 54.4/98.5 |
| R431 | 7030003440 | S.RES | ERJ3GEYJ 102 V (1K) | B | 42.5/98.5 |
| R432 | 7030003440 | S.RES | ERJ3GEYJ 102 V (1K) | B | 56.0/98.5 |
| | | | | | |
| C1 | 4510008540 | S.ELE | EEE1CA100SR | T | 42.6/80.3 |
| C2 | 4030011600 | S.CER | C1608 JB 1E 104K-T | T | 45.9/82.4 |
| C3 | 4030006880 | S.CER | C1608 JB 1H 472K-T | B | 89.6/100.0 |
| C4 | 4030006900 | S.CER | C1608 JB 1H 103K-T | T | 56.0/74.7 |
| C5 | 4030006900 | S.CER | C1608 JB 1H 103K-T | T | 58.6/72.9 |
| C6 | 4030006880 | S.CER | C1608 JB 1H 472K-T | T | 74.6/74.7 |
| C7 | 4030017810 | S.CER | C1608 CH 1H 102J-T | T | 75.3/76.6 |
| C8 | 4030011600 | S.CER | C1608 JB 1E 104K-T | T | 56.0/81.3 |
| C9 | 4030009990 | S.CER | C1608 CH 1H 200J-T | T | 75.3/80.5 |
| C10 | 4030011600 | S.CER | C1608 JB 1E 104K-T | T | 51.8/79.9 |
| C11 | 4030006880 | S.CER | C1608 JB 1H 472K-T | T | 76.6/78.2 |
| C12 | 4030009990 | S.CER | C1608 CH 1H 200J-T | T | 76.6/81.5 |
| C13 | 4510008870 | S.ELE | EEE1AA471UP | T | 48.5/56.6 |
| C14 | 4030011600 | S.CER | C1608 JB 1E 104K-T | T | 60.7/55.3 |
| C15 | 4030011600 | S.CER | C1608 JB 1E 104K-T | T | 67.3/53.7 |
| C16 | 4510008500 | S.ELE | EEE1CA101WP | T | 66.6/48.8 |
| C17 | 4510008550 | S.ELE | EEE1HA010SR | T | 133.3/100.5 |
| C18 | 4510008550 | S.ELE | EEE1HA010SR | T | 133.3/95.7 |
| C19 | 4510008550 | S.ELE | EEE1HA010SR | T | 138.4/91.9 |
| C20 | 4510008550 | S.ELE | EEE1HA010SR | T | 133.3/89.7 |
| C21 | 4510008550 | S.ELE | EEE1HA010SR | T | 138.4/85.3 |
| C22 | 4510008550 | S.ELE | EEE1HA010SR | T | 133.3/83.1 |
| C23 | 4510008550 | S.ELE | EEE1HA010SR | T | 138.4/78.6 |
| C24 | 4510008550 | S.ELE | EEE1HA010SR | T | 133.3/76.5 |
| C25 | 4030011600 | S.CER | C1608 JB 1E 104K-T | T | 53.6/57.7 |
| C26 | 4030006880 | S.CER | C1608 JB 1H 472K-T | T | 61.0/58.2 |
| C38 | 4030011600 | S.CER | C1608 JB 1E 104K-T | T | 91.4/87.6 |
| C39 | 4510008870 | S.ELE | EEE1AA471UP | T | 57.9/49.8 |
| C40 | 4030011600 | S.CER | C1608 JB 1E 104K-T | T | 84.0/70.6 |
| C41 | 4030011600 | S.CER | C1608 JB 1E 104K-T | T | 78.6/73.3 |
| C43 | 4030006880 | S.CER | C1608 JB 1H 472K-T | T | 88.8/95.5 |
| C66 | 4510008540 | S.ELE | EEE1CA100SR | T | 106.6/81.6 |
| C68 | 4030011600 | S.CER | C1608 JB 1E 104K-T | B | 103.6/82.9 |
| C69 | 4030011600 | S.CER | C1608 JB 1E 104K-T | T | 118.4/79.9 |

## [CTRL UNIT]

| REF NO. | PARTS NO. | DESCRIPTION | | M. | H/V LOCATION |
|---|---|---|---|---|---|
| C70 | 4030011600 | S.CER | C1608 JB 1E 104K-T | T | 95.8/80.5 |
| C71 | 4030011600 | S.CER | C1608 JB 1E 104K-T | T | 106.9/77.6 |
| C72 | 4510008540 | S.ELE | EEE1CA100SR | T | 111.6/83.3 |
| C88 | 4030011600 | S.CER | C1608 JB 1E 104K-T | B | 7.8/81.8 |
| C102 | 4010005530 | CER | HM60SJ SL 020C 500V | | |
| C103 | 4010005530 | CER | HM60SJ SL 020C 500V | | |
| C104 | 4610002250 | TRI | TZ03R200Y169B00 | | |
| C105 | 4030011540 | S.CER | C1608 CH 1H 750J-T | B | 13.1/28.5 |
| C106 | 4030011540 | S.CER | C1608 CH 1H 750J-T | T | 25.8/33.1 |
| C107 | 4030017810 | S.CER | C1608 CH 1H 102J-T | T | 12.2/36.1 |
| C108 | 4030017810 | S.CER | C1608 CH 1H 102J-T | T | 25.8/35.5 |
| C109 | 4030006880 | S.CER | C1608 JB 1H 472K-T | B | 21.6/38.4 |
| C110 | 4030006880 | S.CER | C1608 JB 1H 472K-T | B | 18.5/38.4 |
| C111 | 4510008540 | S.ELE | EEE1CA100SR | T | 25.4/45.8 |
| C112 | 4510008540 | S.ELE | EEE1CA100SR | T | 18.9/46.4 |
| C113 | 4030006880 | S.CER | C1608 JB 1H 472K-T | T | 16.3/41.8 |
| C114 | 4030006880 | S.CER | C1608 JB 1H 472K-T | T | 23.1/41.8 |
| C115 | 4030007100 | S.CER | C1608 CH 1H 560J-T | B | 13.1/26.9 |
| C116 | 4030011540 | S.CER | C1608 CH 1H 750J-T | T | 25.8/34.3 |
| C119 | 4030007100 | S.CER | C1608 CH 1H 560J-T | T | 16.9/24.2 |
| C151 | 4010005540 | CER | HM60SJ SL 030C 500V | | |
| C153 | 4030007120 | S.CER | C1608 CH 1H 820J-T | T | 32.3/35.6 |
| C154 | 4030007070 | S.CER | C1608 CH 1H 330J-T | T | 38.5/34.5 |
| C155 | 4030007120 | S.CER | C1608 CH 1H 820J-T | T | 35.9/34.5 |
| C156 | 4030006880 | S.CER | C1608 JB 1H 472K-T | T | 29.8/37.5 |
| C157 | 4030006880 | S.CER | C1608 JB 1H 472K-T | T | 41.6/38.4 |
| C158 | 4030007060 | S.CER | C1608 CH 1H 270J-T | T | 29.7/35.6 |
| C159 | 4030006880 | S.CER | C1608 JB 1H 472K-T | T | 34.4/38.4 |
| C161 | 4030006880 | S.CER | C1608 JB 1H 472K-T | T | 45.2/51.5 |
| C162 | 4550003120 | S.TAN | TEESVD2 1A 476M12R | T | 46.7/46.3 |
| C163 | 4030007170 | S.CER | C1608 CH 1H 221J-T | T | 30.1/59.5 |
| C164 | 4030007170 | S.CER | C1608 CH 1H 221J-T | T | 31.5/55.6 |
| C165 | 4030006880 | S.CER | C1608 JB 1H 472K-T | T | 31.5/51.7 |
| C171 | 4030011600 | S.CER | C1608 JB 1E 104K-T | B | 40.2/37.7 |
| C173 | 4030006880 | S.CER | C1608 JB 1H 472K-T | T | 28.3/48.4 |
| C174 | 4030006880 | S.CER | C1608 JB 1H 472K-T | T | 42.2/49.6 |
| C175 | 4030006880 | S.CER | C1608 JB 1H 472K-T | T | 35.9/49.8 |
| C180 | 4030011600 | S.CER | C1608 JB 1E 104K-T | T | 28.3/49.7 |
| C181 | 4030011600 | S.CER | C1608 JB 1E 104K-T | T | 42.2/48.3 |
| C201 | 4010005580 | CER | HM60SJ SL 070D 500V | | |
| C202 | 4010005520 | CER | HM60SJ SL 010C 500V | | |
| C204 | 4030011570 | S.CER | CM105 CH 101G 50AT | T | 55.3/36.9 |
| C205 | 4030016550 | S.CER | CM105 CH 151G 50AT | T | 51.4/36.9 |
| C206 | 4030009530 | S.CER | C1608 CH 1H 030B-T | T | 52.7/36.9 |
| C207 | 4030006880 | S.CER | C1608 JB 1H 472K-T | T | 49.8/39.3 |
| C208 | 4030006880 | S.CER | C1608 JB 1H 472K-T | T | 56.1/40.0 |
| C209 | 4030017810 | S.CER | C1608 CH 1H 102J-T | T | 51.7/40.0 |
| C210 | 4030006880 | S.CER | C1608 JB 1H 472K-T | T | 53.5/40.0 |
| C211 | 4030006880 | S.CER | C1608 JB 1H 472K-T | T | 14.4/49.4 |
| C212 | 4030006880 | S.CER | C1608 JB 1H 472K-T | T | 23.8/49.4 |
| C213 | 4030006880 | S.CER | C1608 JB 1H 472K-T | B | 19.7/55.7 |
| C214 | 4030007170 | S.CER | C1608 CH 1H 221J-T | T | 14.7/59.4 |
| C215 | 4030007170 | S.CER | C1608 CH 1H 221J-T | T | 21.4/59.4 |
| C216 | 4030011340 | S.CER | C1608 CH 1H 471J-T | T | 15.4/61.4 |
| C217 | 4030011340 | S.CER | C1608 CH 1H 471J-T | T | 20.6/61.4 |
| C218 | 4030006880 | S.CER | C1608 JB 1H 472K-T | B | 18.2/54.1 |
| C252 | 4030006880 | S.CER | C1608 JB 1H 472K-T | T | 72.9/33.3 |
| C253 | 4030006880 | S.CER | C1608 JB 1H 472K-T | T | 76.6/38.3 |
| C254 | 4030006880 | S.CER | C1608 JB 1H 472K-T | T | 73.0/48.1 |
| C255 | 4030006880 | S.CER | C1608 JB 1H 472K-T | T | 73.0/38.2 |
| C301 | 4010005520 | CER | HM60SJ SL 010C 500V | | |
| C302 | 4030007030 | S.CER | C1608 CH 1H 150J-T | T | 85.6/56.6 |
| C303 | 4030007050 | S.CER | C1608 CH 1H 220J-T | T | 85.6/59.2 |
| C304 | 4030017810 | S.CER | C1608 CH 1H 102J-T | T | 83.7/60.5 |
| C305 | 4030017810 | S.CER | C1608 CH 1H 102J-T | T | 90.3/61.3 |
| C307 | 4030006880 | S.CER | C1608 JB 1H 472K-T | T | 78.8/55.9 |
| C308 | 4030006880 | S.CER | C1608 JB 1H 472K-T | T | 77.9/59.8 |
| C309 | 4030011600 | S.CER | C1608 JB 1E 104K-T | T | 68.8/59.8 |
| C310 | 4030009530 | S.CER | C1608 CH 1H 030B-T | T | 85.6/57.9 |
| C417 | 4510008540 | S.ELE | EEE1CA100SR | T | 22.7/77.7 |
| C418 | 4510008540 | S.ELE | EEE1CA100SR | T | 40.6/85.6 |
| C419 | 4030006880 | S.CER | C1608 JB 1H 472K-T | T | 19.6/78.7 |
| C420 | 4030006880 | S.CER | C1608 JB 1H 472K-T | T | 38.4/79.3 |
| | | | | | |
| RL251 | 6330001530 | REL | NR-HD(5V) AE5349 | | |
| RL252 | 6330001460 | REL | FTR-F1CA012V | | |
| RL253 | 6330001460 | REL | FTR-F1CA012V | | |
| | | | | | |
| CP1 | 6910009670 | S.CHE | HK3-S-T | T | 67.8/100.1 |
| CP101 | 6910009670 | S.CHE | HK3-S-T | T | 23.4/81.7 |
| | | | | | |
| J1 | 6510023771 | S.CON | 52793-2470 (2490) | T | 101.8/99.6 |
| J2 | 6510023761 | S.CON | S10B-PH-SM4-TB(LF)(SN) | T | 148.3/82.8 |
| J51 | 6510023771 | S.CON | 52793-2470 (2490) | T | 43.9/99.6 |
| J52 | 6510022031 | S.CON | B10B-ZR-SM4-TF(LF)(SN) | T | 133.0/2.9 |
| J53 | 6510021431 | S.CON | S8B-ZR-SM4A-TF(LF)(SN) | T | 134.6/65.0 |
| J101 | 6510017920 | CON | 1811P342 | | |
| J251 | 6510017920 | CON | 1811P342 | | |
| J252 | 6510017920 | CON | 1811P342 | | |
| J301 | 6510017920 | CON | 1811P342 | | |
| J351 | 6510028210 | CON | SJ050010 (TMP-J01X-V6) | | |
| | | | | | |
| W1 | 9029804001 | WIR | 72/99/040/X98/X98 | | |

Eqv.= This component is equivalent to the REF No. component listed above, and may be substituted on parts orders and repairs.

M.=Mounted side (T: Mounted on the Top side, B: Mounted on the Bottom side)
S.=Surface mount

## [ANT-SW UNIT]

| REF NO. | PARTS NO. | DESCRIPTION | | M. | H/V LOCATION |
|---|---|---|---|---|---|
| IC11 | 1130011510 | S.IC | BU2099FV-E2 | T | 160.6/33.6 |
| IC12 | 1180002391 | S.REG | S-812C33AMC-C2N-G | T | 152.4/28.7 |
| Q12 | 1590001001 | S.TRA | RN2427(TE85LF) | T | 152.4/36.9 |
| Q13 | 1590001001 | S.TRA | RN2427(TE85LF) | T | 164.8/38.6 |
| Q14 | 1590001001 | S.TRA | RN2427(TE85LF) | T | 164.7/17.5 |
| D51 | 1750000550 | S.DIO | 1SS355 TE-17 | T | 162.0/13.3 |
| D52 | 1750000550 | S.DIO | 1SS355 TE-17 | T | 140.3/43.0 |
| D53 | 1750000550 | S.DIO | 1SS355 TE-17 | T | 115.1/41.5 |
| D61 | 1750000550 | S.DIO | 1SS355 TE-17 | T | 119.0/19.7 |
| D62 | 1750000550 | S.DIO | 1SS355 TE-17 | T | 107.2/43.0 |
| D63 | 1750000550 | S.DIO | 1SS355 TE-17 | T | 130.1/54.2 |
| D72 | 1750000550 | S.DIO | 1SS355 TE-17 | B | 138.2/61.3 |
| D73 | 1750000550 | S.DIO | 1SS355 TE-17 | B | 138.2/57.5 |
| D82 | 1750000550 | S.DIO | 1SS355 TE-17 | T | 41.4/45.3 |
| D83 | 1750000550 | S.DIO | 1SS355 TE-17 | T | 28.2/45.3 |
| D84 | 1750000550 | S.DIO | 1SS355 TE-17 | T | 25.8/43.0 |
| L1 | 6200003590 | S.COI | EXCCL3225U1 | T | 51.1/76.5 |
| L2 | 6110001670 | COI | LA-253 | | |
| R1 | 7540000100 | ABS | SRYH-350L | | |
| R2 | 7540000130 | ABS | 2P-50A-301 | | |
| R3 | 7540000130 | ABS | 2P-50A-301 | | |
| R11 | 7030003320 | S.RES | ERJ3GEYJ 101 V (100) | T | 165.5/27.5 |
| R12 | 7030003320 | S.RES | ERJ3GEYJ 101 V (100) | T | 164.2/27.5 |
| R13 | 7030003320 | S.RES | ERJ3GEYJ 101 V (100) | T | 162.9/27.4 |
| R14 | 7030003320 | S.RES | ERJ3GEYJ 101 V (100) | T | 166.3/33.9 |
| R15 | 7030003320 | S.RES | ERJ3GEYJ 101 V (100) | T | 148.7/31.7 |
| R16 | 7030003320 | S.RES | ERJ3GEYJ 101 V (100) | T | 151.5/31.7 |
| R17 | 7030003320 | S.RES | ERJ3GEYJ 101 V (100) | T | 154.7/39.4 |
| R18 | 7030003320 | S.RES | ERJ3GEYJ 101 V (100) | T | 151.5/33.0 |
| R19 | 7030003320 | S.RES | ERJ3GEYJ 101 V (100) | T | 151.5/34.3 |
| R20 | 7030003320 | S.RES | ERJ3GEYJ 101 V (100) | T | 152.2/39.1 |
| R21 | 7030003320 | S.RES | ERJ3GEYJ 101 V (100) | T | 154.7/36.6 |
| R22 | 7030003320 | S.RES | ERJ3GEYJ 101 V (100) | T | 166.9/38.8 |
| R23 | 7030003320 | S.RES | ERJ3GEYJ 101 V (100) | T | 162.3/38.9 |
| R24 | 7030003320 | S.RES | ERJ3GEYJ 101 V (100) | T | 161.0/39.1 |
| R25 | 7030003320 | S.RES | ERJ3GEYJ 101 V (100) | T | 159.7/39.2 |
| R26 | 7030003320 | S.RES | ERJ3GEYJ 101 V (100) | T | 162.7/15.7 |
| C1 | 4010005610 | CER | HM60SJ SL 100D 500V | | |
| C2 | 4010005660 | CER | HM60SJ SL 220J 500V | | |
| C11 | 4030011600 | S.CER | C1608 JB 1E 104K-T | T | 160.0/27.6 |
| C12 | 4030011600 | S.CER | C1608 JB 1E 104K-T | T | 158.7/27.6 |
| C51 | 4030006880 | S.CER | C1608 JB 1H 472K-T | T | 163.6/13.6 |
| C52 | 4030006880 | S.CER | C1608 JB 1H 472K-T | T | 144.5/41.3 |
| C53 | 4030006880 | S.CER | C1608 JB 1H 472K-T | T | 113.6/41.8 |
| C61 | 4030006880 | S.CER | C1608 JB 1H 472K-T | T | 119.3/21.4 |
| C62 | 4030006880 | S.CER | C1608 JB 1H 472K-T | T | 107.5/44.6 |
| C63 | 4030006880 | S.CER | C1608 JB 1H 472K-T | T | 77.5/43.6 |
| C71 | 4030006880 | S.CER | C1608 JB 1H 472K-T | T | 69.0/19.9 |
| C72 | 4030006880 | S.CER | C1608 JB 1H 472K-T | T | 61.6/44.5 |
| C73 | 4030006880 | S.CER | C1608 JB 1H 472K-T | T | 73.1/43.5 |
| C81 | 4030006880 | S.CER | C1608 JB 1H 472K-T | T | 37.2/21.3 |
| C82 | 4030006880 | S.CER | C1608 JB 1H 472K-T | T | 43.0/45.3 |
| C83 | 4030006880 | S.CER | C1608 JB 1H 472K-T | T | 26.7/45.6 |
| C84 | 4030006880 | S.CER | C1608 JB 1H 472K-T | T | 25.1/45.6 |
| RL51 | 6330001460 | REL | FTR-F1CA012V | | |
| RL52 | 6330001780 | REL | FTR-MYAA012D | | |
| RL53 | 6330001780 | REL | FTR-MYAA012D | | |
| RL61 | 6330001460 | REL | FTR-F1CA012V | | |
| RL62 | 6330001780 | REL | FTR-MYAA012D | | |
| RL63 | 6330001780 | REL | FTR-MYAA012D | | |
| RL71 | 6330001460 | REL | FTR-F1CA012V | | |
| RL72 | 6330001780 | REL | FTR-MYAA012D | | |
| RL73 | 6330001780 | REL | FTR-MYAA012D | | |
| RL81 | 6330001460 | REL | FTR-F1CA012V | | |
| RL82 | 6330001780 | REL | FTR-MYAA012D | | |
| RL83 | 6330001780 | REL | FTR-MYAA012D | | |
| RL84 | 6330001780 | REL | FTR-MYAA012D | | |
| J1 | 6510017930 | CON | 1771P145-20 | | |
| J2 | 6510028210 | CON | SJ050010 (TMP-J01X-V6) | | |
| J3 | 6510028210 | CON | SJ050010 (TMP-J01X-V6) | | |
| J4 | 6510019971 | S.CON | 52808-1071 | T | 153.1/22.0 |
| J51 | 6510000410 | CON | MR-DS-E 02 <SSC> | | |
| J61 | 6510000410 | CON | MR-DS-E 02 <SSC> | | |
| J71 | 6510000410 | CON | MR-DS-E 02 <SSC> | | |
| J81 | 6510000410 | CON | MR-DS-E 02 <SSC> | | |

## [OSC UNIT]

| REF NO. | PARTS NO. | DESCRIPTION | | M. | H/V LOCATION |
|---|---|---|---|---|---|
| IC10 | 1180002610 | S.REG | BA12FP-E2 | T | 37.9/20.1 |
| IC91 | 1190002001 | S.IC | AD5260BRUZ50 <FE> | T | 26.9/12.1 |
| IC92 | 1130007111 | S.IC | TC7W04FU F | T | 23.8/6.2 |
| Q10 | 1590000680 | S.TRA | DTC114EUA T106 | T | 32.5/35.1 |
| Q11 | 1590000680 | S.TRA | DTC114EUA T106 | T | 22.2/42.4 |
| Q12 | 1590000680 | S.TRA | DTC114EUA T106 | T | 29.1/41.5 |
| Q13 | 1590000680 | S.TRA | DTC114EUA T106 | T | 31.6/41.6 |
| Q21 | 1530002060 | S.TRA | 2SC4081 T106 R | T | 11.3/6.4 |
| Q22 | 1530002601 | S.TRA | 2SC4215-O(TE85RF) | T | 10.4/17.9 |
| Q23 | 1590000680 | S.TRA | DTC114EUA T106 | T | 13.0/11.0 |
| Q42 | 1530002601 | S.TRA | 2SC4215-O(TE85RF) | T | 18.9/18.8 |
| Q43 | 1590000680 | S.TRA | DTC114EUA T106 | T | 19.6/11.7 |
| Q61 | 1530002060 | S.TRA | 2SC4081 T106 R | T | 26.2/36.1 |
| Q62 | 1530002060 | S.TRA | 2SC4081 T106 R | T | 20.7/38.6 |
| Q70 | 1530002060 | S.TRA | 2SC4081 T106 R | T | 10.0/41.2 |
| Q101 | 1530002700 | S.TRA | 2SC4097 T106Q | T | 36.8/40.1 |
| D10 | 1790001251 | S.DIO | MA2S1110GL | T | 31.5/31.8 |
| D11 | 1790001251 | S.DIO | MA2S1110GL | T | 16.5/38.3 |
| D71 | 1750000381 | S.DIO | 1SS312 (TE85LF) | T | 29.9/35.0 |
| D72 | 1750000381 | S.DIO | 1SS312 (TE85LF) | T | 29.9/37.6 |
| X1 | 6050012210 | XTA | CR-772 OCVXO-148A | | |
| L1 | 6200003950 | S.COI | HF50ACC 322513-T | T | 155.8/27.5 |
| L2 | 6200003950 | S.COI | HF50ACC 322513-T | T | 54.5/77.8 |
| L20 | 6200005491 | S.COI | NLV32T-331J | T | 14.7/2.0 |
| L21 | 6200003261 | S.COI | NLV32T-101J | T | 6.9/11.3 |
| L22 | 6200003261 | S.COI | NLV32T-101J | T | 8.0/14.7 |
| L23 | 6200003041 | S.COI | NLV32T-R68J | T | 6.9/20.4 |
| L24 | 6200003051 | S.COI | NLV32T-R82J | T | 6.3/23.8 |
| L41 | 6200003261 | S.COI | NLV32T-101J | T | 15.3/13.8 |
| L42 | 6200003261 | S.COI | NLV32T-101J | T | 14.7/17.2 |
| L43 | 6200003041 | S.COI | NLV32T-R68J | T | 15.4/22.4 |
| L44 | 6200003051 | S.COI | NLV32T-R82J | T | 18.8/24.3 |
| L61 | 6150004170 | COI | LS-476 | | |
| L62 | 6150004170 | COI | LS-476 | | |
| L91 | 6200003950 | S.COI | HF50ACC 322513-T | T | 23.7/20.3 |
| L92 | 6200003950 | S.COI | HF50ACC 322513-T | T | 19.5/4.4 |
| R1 | 7030003440 | S.RES | ERJ3GEYJ 102 V (1K) | T | 32.4/44.3 |
| R2 | 7030003440 | S.RES | ERJ3GEYJ 102 V (1K) | T | 29.8/44.3 |
| R3 | 7030003440 | S.RES | ERJ3GEYJ 102 V (1K) | T | 25.9/44.2 |
| R11 | 7030003200 | S.RES | ERJ3GEYJ 100 V (10) | T | 33.4/32.3 |
| R12 | 7030003200 | S.RES | ERJ3GEYJ 100 V (10) | T | 16.7/40.3 |
| R13 | 7030003440 | S.RES | ERJ3GEYJ 102 V (1K) | T | 16.9/11.6 |
| R20 | 7030003240 | S.RES | ERJ3GEYJ 220 V (22) | T | 11.4/1.9 |
| R21 | 7030003560 | S.RES | ERJ3GEYJ 103 V (10K) | T | 11.2/4.5 |
| R22 | 7030003370 | S.RES | ERJ3GEYJ 271 V (270) | T | 15.6/7.9 |
| R23 | 7030004040 | S.RES | ERJ3GEYJ 4R7 V (4.7) | T | 11.4/14.0 |
| R24 | 7030003370 | S.RES | ERJ3GEYJ 271 V (270) | T | 12.3/17.7 |
| R25 | 7030003500 | S.RES | ERJ3GEYJ 332 V (3.3K) | T | 10.1/14.2 |
| R26 | 7030003480 | S.RES | ERJ3GEYJ 222 V (2.2K) | T | 12.9/9.1 |
| R27 | 7030003360 | S.RES | ERJ3GEYJ 221 V (220) | T | 5.8/14.0 |
| R28 | 7030003440 | S.RES | ERJ3GEYJ 102 V (1K) | T | 10.3/12.0 |
| R43 | 7030003240 | S.RES | ERJ3GEYJ 220 V (22) | T | 19.8/14.2 |
| R44 | 7030003370 | S.RES | ERJ3GEYJ 271 V (270) | T | 20.8/18.7 |
| R45 | 7030003500 | S.RES | ERJ3GEYJ 332 V (3.3K) | T | 17.9/15.2 |
| R46 | 7030003480 | S.RES | ERJ3GEYJ 222 V (2.2K) | T | 19.5/9.8 |
| R47 | 7030003290 | S.RES | ERJ3GEYJ 560 V (56) | T | 16.9/17.9 |
| R61 | 7030003240 | S.RES | ERJ3GEYJ 220 V (22) | T | 22.3/35.4 |
| R62 | 7030003560 | S.RES | ERJ3GEYJ 103 V (10K) | T | 26.3/34.2 |
| R63 | 7030003380 | S.RES | ERJ3GEYJ 331 V (330) | T | 26.0/38.0 |
| R64 | 7030003280 | S.RES | ERJ3GEYJ 470 V (47) | T | 20.8/40.5 |
| R65 | 7030003400 | S.RES | ERJ3GEYJ 471 V (470) | T | 20.0/34.9 |
| R67 | 7030003560 | S.RES | ERJ3GEYJ 103 V (10K) | T | 19.7/36.7 |
| R68 | 7030003550 | S.RES | ERJ3GEYJ 822 V (8.2K) | T | 22.3/36.7 |
| R71 | 7030003340 | S.RES | ERJ3GEYJ 151 V (150) | T | 32.7/38.3 |
| R72 | 7030003270 | S.RES | ERJ3GEYJ 390 V (39) | T | 31.2/39.6 |
| R73 | 7030003340 | S.RES | ERJ3GEYJ 151 V (150) | T | 28.6/39.5 |
| R75 | 7030003280 | S.RES | ERJ3GEYJ 470 V (47) | T | 16.3/43.1 |
| R77 | 7030003320 | S.RES | ERJ3GEYJ 101 V (100) | T | 12.6/44.7 |
| R78 | 7030003470 | S.RES | ERJ3GEYJ 182 V (1.8K) | T | 8.0/41.1 |
| R79 | 7030003480 | S.RES | ERJ3GEYJ 222 V (2.2K) | T | 6.2/41.6 |
| R80 | 7030003360 | S.RES | ERJ3GEYJ 221 V (220) | T | 11.9/41.1 |
| R82 | 7030003280 | S.RES | ERJ3GEYJ 470 V (47) | T | 17.6/43.1 |
| R91 | 7030006091 | S.RES | ERA3YED 822V (8.2K) | T | 19.6/7.2 |
| R92 | 7030005341 | S.RES | ERA3YED 332V (3.3K) | T | 19.6/8.5 |
| R93 | 7030003560 | S.RES | ERJ3GEYJ 103 V (10K) | T | 25.6/1.5 |
| R94 | 7030003540 | S.RES | ERJ3GEYJ 682 V (6.8K) | T | 25.6/2.8 |
| R95 | 7030003320 | S.RES | ERJ3GEYJ 101 V (100) | T | 22.5/16.7 |
| R96 | 7030003440 | S.RES | ERJ3GEYJ 102 V (1K) | T | 32.0/14.2 |
| R97 | 7030003440 | S.RES | ERJ3GEYJ 102 V (1K) | T | 28.7/16.2 |
| R98 | 7030003640 | S.RES | ERJ3GEYJ 473 V (47K) | T | 27.4/16.2 |
| R99 | 7030003480 | S.RES | ERJ3GEYJ 222 V (2.2K) | T | 22.5/10.1 |
| R100 | 7030003640 | S.RES | ERJ3GEYJ 473 V (47K) | T | 27.2/6.5 |
| R101 | 7030003360 | S.RES | ERJ3GEYJ 221 V (220) | T | 36.9/38.2 |
| R102 | 7030005981 | S.RES | ERA3YED 333V (33K) | T | 32.4/6.8 |
| C1 | 4030006880 | S.CER | C1608 JB 1H 472K-T | T | 39.6/47.7 |
| C2 | 4030006880 | S.CER | C1608 JB 1H 472K-T | T | 31.1/44.3 |
| C3 | 4030006880 | S.CER | C1608 JB 1H 472K-T | T | 33.7/44.1 |
| C4 | 4030006880 | S.CER | C1608 JB 1H 472K-T | T | 30.6/8.7 |
| C5 | 4510008550 | S.ELE | EEE1HA010SR | T | 30.6/2.6 |
| C6 | 4030006880 | S.CER | C1608 JB 1H 472K-T | T | 35.1/3.4 |
| C7 | 4510008550 | S.ELE | EEE1HA010SR | T | 38.8/2.7 |
| C8 | 4030011600 | S.CER | C1608 JB 1E 104K-T | T | 17.3/2.1 |
| C9 | 4030006880 | S.CER | C1608 JB 1H 472K-T | T | 27.2/43.2 |

Eqv.= This component is equivalent to the REF No. component listed above, and may be substituted on parts orders and repairs.

M.=Mounted side (T: Mounted on the Top side, B: Mounted on the Bottom side)
S.=Surface mount

## [OSC UNIT]

| REF NO. | PARTS NO. | DESCRIPTION | M. | H/V LOCATION |
|---|---|---|---|---|
| C10 | 4510008680 | S.ELE EEE1EA220SP | T | 29.8/21.4 |
| C11 | 4030004760 | S.CER C2012 JF 1H 104Z-T | T | 35.9/13.1 |
| C12 | 4030006880 | S.CER C1608 JB 1H 472K-T | T | 39.3/12.8 |
| C13 | 4510008680 | S.ELE EEE1EA220SP | T | 37.2/8.6 |
| C14 | 4030006880 | S.CER C1608 JB 1H 472K-T | T | 94.8/34.0 |
| C15 | 4030011600 | S.CER C1608 JB 1E 104K-T | T | 39.3/14.1 |
| C16 | 4030011600 | S.CER C1608 JB 1E 104K-T | T | 29.6/32.3 |
| C17 | 4030011600 | S.CER C1608 JB 1E 104K-T | T | 19.4/41.8 |
| C18 | 4030011600 | S.CER C1608 JB 1E 104K-T | T | 17.8/38.3 |
| C19 | 4030011600 | S.CER C1608 JB 1E 104K-T | T | 31.5/33.1 |
| C20 | 4030011600 | S.CER C1608 JB 1E 104K-T | T | 13.4/5.2 |
| C21 | 4030011600 | S.CER C1608 JB 1E 104K-T | T | 11.4/3.2 |
| C22 | 4030011600 | S.CER C1608 JB 1E 104K-T | T | 15.0/11.1 |
| C23 | 4030011600 | S.CER C1608 JB 1E 104K-T | T | 12.0/15.9 |
| C24 | 4030011600 | S.CER C1608 JB 1E 104K-T | T | 12.7/14.0 |
| C25 | 4030011600 | S.CER C1608 JB 1E 104K-T | T | 10.3/19.9 |
| C26 | 4030017800 | S.CER C1608 CH 1H 561J-T | T | 10.3/21.2 |
| C27 | 4030007120 | S.CER C1608 CH 1H 820J-T | T | 7.8/18.2 |
| C28 | 4030011340 | S.CER C1608 CH 1H 471J-T | T | 9.0/22.5 |
| C29 | 4030011330 | S.CER C1608 CH 1H 391J-T | T | 10.3/23.8 |
| C30 | 4030007050 | S.CER C1608 CH 1H 220J-T | T | 8.4/24.5 |
| C31 | 4030017800 | S.CER C1608 CH 1H 561J-T | T | 10.3/25.1 |
| C32 | 4030011600 | S.CER C1608 JB 1E 104K-T | T | 10.8/9.2 |
| C33 | 4030011600 | S.CER C1608 JB 1E 104K-T | T | 9.5/10.1 |
| C42 | 4030011600 | S.CER C1608 JB 1E 104K-T | T | 21.6/12.7 |
| C43 | 4030011600 | S.CER C1608 JB 1E 104K-T | T | 20.1/16.8 |
| C44 | 4030011600 | S.CER C1608 JB 1E 104K-T | T | 20.0/15.5 |
| C45 | 4030011600 | S.CER C1608 JB 1E 104K-T | T | 13.2/20.6 |
| C46 | 4030017800 | S.CER C1608 CH 1H 561J-T | T | 15.1/19.8 |
| C47 | 4030007120 | S.CER C1608 CH 1H 820J-T | T | 13.2/23.2 |
| C48 | 4030011340 | S.CER C1608 CH 1H 471J-T | T | 17.5/21.6 |
| C49 | 4030011330 | S.CER C1608 CH 1H 391J-T | T | 18.8/21.6 |
| C50 | 4030007050 | S.CER C1608 CH 1H 220J-T | T | 20.7/22.1 |
| C51 | 4030017800 | S.CER C1608 CH 1H 561J-T | T | 21.7/24.4 |
| C52 | 4030011600 | S.CER C1608 JB 1E 104K-T | T | 17.6/8.9 |
| C53 | 4030011600 | S.CER C1608 JB 1E 104K-T | T | 16.3/9.8 |
| C61 | 4030011600 | S.CER C1608 JB 1E 104K-T | T | 26.3/32.9 |
| C62 | 4030011600 | S.CER C1608 JB 1E 104K-T | T | 24.1/36.2 |
| C63 | 4030011600 | S.CER C1608 JB 1E 104K-T | T | 26.0/39.3 |
| C64 | 4030011600 | S.CER C1608 JB 1E 104K-T | T | 22.8/34.1 |
| C66 | 4030007010 | S.CER C1608 CH 1H 100D-T | T | 12.9/25.1 |
| C67 | 4030011600 | S.CER C1608 JB 1E 104K-T | T | 17.1/35.4 |
| C71 | 4030006880 | S.CER C1608 JB 1H 472K-T | T | 33.8/39.6 |
| C72 | 4030006880 | S.CER C1608 JB 1H 472K-T | T | 14.4/45.4 |
| C73 | 4030006880 | S.CER C1608 JB 1H 472K-T | T | 6.2/40.3 |
| C74 | 4030006880 | S.CER C1608 JB 1H 472K-T | T | 10.0/43.2 |
| C75 | 4030006880 | S.CER C1608 JB 1H 472K-T | T | 13.2/41.0 |
| C76 | 4030006880 | S.CER C1608 JB 1H 472K-T | T | 19.4/45.4 |
| C77 | 4030011600 | S.CER C1608 JB 1E 104K-T | T | 10.7/44.7 |
| C91 | 4030006880 | S.CER C1608 JB 1H 472K-T | T | 25.5/16.5 |
| C92 | 4030006880 | S.CER C1608 JB 1H 472K-T | T | 17.3/4.7 |
| C93 | 4030006880 | S.CER C1608 JB 1H 472K-T | T | 22.2/2.8 |
| C94 | 4030006880 | S.CER C1608 JB 1H 472K-T | T | 28.0/8.7 |
| C101 | 4550007260 | S.TAN F931C475MAABMA | T | 40.1/38.9 |
| Eqv. | 4550006480 | S.TAN TEESVA 1C 475M8R | | |
| RL10 | 6330001750 | REL FTR-B4CA012Z | | |
| RL11 | 6330001750 | REL FTR-B4CA012Z | | |
| J2 | 6510019971 | S.CON 52808-1071 | T | 30.6/48.8 |
| J71 | 6510028210 | CON SJ050010 (TMP-J01X-V6) | | |
| J72 | 6510028210 | CON SJ050010 (TMP-J01X-V6) | | |
| J73 | 6510028210 | CON SJ050010 (TMP-J01X-V6) | | |

## [REG UNIT]

| REF NO. | PARTS NO. | DESCRIPTION | M. | H/V LOCATION |
|---|---|---|---|---|
| EP1 | 6910016052 | UNI FP2212B-2 FCC ROHS [USA] | | |
| | 6910016062 | UNI FP2212C-2 RTTE ROHS [EUR] | | |
| | 6910016062 | UNI FP2212C-2 RTTE ROHS [UK] | | |

Eqv.= This component is equivalent to the REF No. component listed above, and may be substituted on parts orders and repairs.

M.=Mounted side (T: Mounted on the Top side, B: Mounted on the Bottom side)
S.=Surface mount

## [DIGISEL UNIT]

| REF NO. | PARTS NO. | DESCRIPTION | | M. | H/V LOCATION |
|---|---|---|---|---|---|
| IC1 | 1130014370 | S.IC | CAT24C256XI-T2 | B | 18.9/52.0 |
| IC4 | 1130011510 | S.IC | BU2099FV-E2 | T | 29.9/55.8 |
| IC5 | 1130011510 | S.IC | BU2099FV-E2 | T | 18.5/55.8 |
| IC501 | 1130014370 | S.IC | CAT24C256XI-T2 | B | 17.5/26.5 |
| IC504 | 1130011510 | S.IC | BU2099FV-E2 | T | 28.3/29.2 |
| IC505 | 1130011510 | S.IC | BU2099FV-E2 | T | 18.1/29.3 |
| Q701 | 1530003852 | S.TRA | 2SC5551A-F-TD-E | T | 49.7/21.3 |
| D51 | 1750000550 | S.DIO | 1SS355 TE-17 | B | 60.7/57.2 |
| D52 | 1750000550 | S.DIO | 1SS355 TE-17 | B | 61.6/44.8 |
| D53 | 1750000550 | S.DIO | 1SS355 TE-17 | T | 53.1/59.2 |
| D54 | 1750000550 | S.DIO | 1SS355 TE-17 | B | 90.2/68.2 |
| D55 | 1750000550 | S.DIO | 1SS355 TE-17 | B | 69.5/68.4 |
| D56 | 1750000550 | S.DIO | 1SS355 TE-17 | B | 67.3/55.1 |
| D57 | 1750000550 | S.DIO | 1SS355 TE-17 | T | 66.0/48.7 |
| D58 | 1750000550 | S.DIO | 1SS355 TE-17 | B | 114.3/50.2 |
| D59 | 1750000550 | S.DIO | 1SS355 TE-17 | B | 90.5/51.0 |
| D60 | 1750000550 | S.DIO | 1SS355 TE-17 | B | 90.5/54.4 |
| D61 | 1750000550 | S.DIO | 1SS355 TE-17 | B | 114.3/53.5 |
| D62 | 1750000550 | S.DIO | 1SS355 TE-17 | B | 138.2/50.2 |
| D63 | 1750000550 | S.DIO | 1SS355 TE-17 | T | 79.1/43.6 |
| D64 | 1750000550 | S.DIO | 1SS355 TE-17 | T | 128.9/56.0 |
| D65 | 1750000550 | S.DIO | 1SS355 TE-17 | T | 128.9/57.8 |
| D66 | 1750000550 | S.DIO | 1SS355 TE-17 | T | 128.9/59.6 |
| D67 | 1750000550 | S.DIO | 1SS355 TE-17 | T | 128.9/61.4 |
| D68 | 1750000550 | S.DIO | 1SS355 TE-17 | T | 128.9/63.2 |
| D69 | 1750000550 | S.DIO | 1SS355 TE-17 | B | 183.4/63.0 |
| D70 | 1750000550 | S.DIO | 1SS355 TE-17 | B | 162.1/61.3 |
| D71 | 1750000550 | S.DIO | 1SS355 TE-17 | T | 68.8/21.5 |
| D72 | 1750000550 | S.DIO | 1SS355 TE-17 | T | 61.6/43.0 |
| D73 | 1750000550 | S.DIO | 1SS355 TE-17 | T | 65.8/43.4 |
| D74 | 1750000550 | S.DIO | 1SS355 TE-17 | B | 114.3/61.4 |
| D75 | 1750000550 | S.DIO | 1SS355 TE-17 | B | 90.5/59.1 |
| D201 | 1710001240 | DIO | L204BBB | | |
| D202 | 1710001240 | DIO | L204BBB | | |
| D203 | 1750000550 | S.DIO | 1SS355 TE-17 | B | 48.3/73.3 |
| D204 | 1750000550 | S.DIO | 1SS355 TE-17 | B | 46.1/73.3 |
| D205 | 1750000550 | S.DIO | 1SS355 TE-17 | B | 44.8/69.7 |
| D521 | 1750000550 | S.DIO | 1SS355 TE-17 | B | 25.0/35.2 |
| D551 | 1750000550 | S.DIO | 1SS355 TE-17 | B | 63.7/9.2 |
| D552 | 1750000550 | S.DIO | 1SS355 TE-17 | B | 61.7/23.0 |
| D553 | 1750000550 | S.DIO | 1SS355 TE-17 | B | 58.0/8.5 |
| D554 | 1750000550 | S.DIO | 1SS355 TE-17 | B | 91.0/12.8 |
| D555 | 1750000550 | S.DIO | 1SS355 TE-17 | T | 68.6/11.7 |
| D556 | 1750000550 | S.DIO | 1SS355 TE-17 | B | 67.2/24.9 |
| D557 | 1750000550 | S.DIO | 1SS355 TE-17 | B | 70.2/36.4 |
| D558 | 1750000550 | S.DIO | 1SS355 TE-17 | B | 114.3/27.1 |
| D559 | 1750000550 | S.DIO | 1SS355 TE-17 | B | 90.6/26.8 |
| D560 | 1750000550 | S.DIO | 1SS355 TE-17 | B | 90.6/30.3 |
| D561 | 1750000550 | S.DIO | 1SS355 TE-17 | B | 114.3/30.5 |
| D562 | 1750000550 | S.DIO | 1SS355 TE-17 | B | 138.2/27.1 |
| D563 | 1750000550 | S.DIO | 1SS355 TE-17 | B | 138.2/30.5 |
| D564 | 1750000550 | S.DIO | 1SS355 TE-17 | B | 162.1/27.1 |
| D565 | 1750000550 | S.DIO | 1SS355 TE-17 | B | 162.1/30.6 |
| D566 | 1750000550 | S.DIO | 1SS355 TE-17 | B | 182.5/33.5 |
| D567 | 1750000550 | S.DIO | 1SS355 TE-17 | B | 114.3/19.6 |
| D568 | 1750000550 | S.DIO | 1SS355 TE-17 | B | 90.7/19.6 |
| D569 | 1750000550 | S.DIO | 1SS355 TE-17 | B | 183.6/17.1 |
| D570 | 1750000550 | S.DIO | 1SS355 TE-17 | B | 162.1/19.7 |
| D571 | 1750000550 | S.DIO | 1SS355 TE-17 | B | 162.1/23.5 |
| D572 | 1750000550 | S.DIO | 1SS355 TE-17 | B | 138.2/23.5 |
| D573 | 1750000550 | S.DIO | 1SS355 TE-17 | B | 138.2/19.6 |
| D574 | 1750000550 | S.DIO | 1SS355 TE-17 | B | 114.3/23.4 |
| D575 | 1750000550 | S.DIO | 1SS355 TE-17 | B | 90.7/22.9 |
| D701 | 1710001240 | DIO | L204BBB | | |
| D702 | 1710001240 | DIO | L204BBB | | |
| D703 | 1750000550 | S.DIO | 1SS355 TE-17 | B | 47.0/9.0 |
| D704 | 1750000550 | S.DIO | 1SS355 TE-17 | B | 44.9/9.0 |
| D705 | 1750000550 | S.DIO | 1SS355 TE-17 | T | 51.8/34.3 |
| L1 | 6200003261 | S.COI | NLV32T-101J | T | 38.9/43.7 |
| L2 | 6200003950 | S.COI | HF50ACC 322513-T | T | 35.9/43.7 |
| L3 | 6200003261 | S.COI | NLV32T-101J | T | 14.7/23.0 |
| L4 | 6200003261 | S.COI | NLV32T-101J | B | 4.6/44.0 |
| L101 | 6140003980 | COI | LR-476 | | |
| L102 | 6140003990 | COI | LR-477 | | |
| L103 | 6140004001 | COI | LR-478A | | |
| L104 | 6140004010 | COI | LR-479 | | |
| L105 | 6140004020 | COI | LR-480 | | |
| L106 | 6140004030 | COI | LR-481 | | |
| L107 | 6110003930 | COI | LA-595 | | |
| L201 | 6180000920 | COI | LAL 03NA 221K | | |
| L203 | 6140003940 | COI | LR-493 | | |
| L503 | 6200003261 | S.COI | NLV32T-101J | B | 4.6/36.0 |
| L504 | 6200003261 | S.COI | NLV32T-101J | B | 4.6/32.0 |
| L601 | 6140003980 | COI | LR-476 | | |
| L602 | 6140003990 | COI | LR-477 | | |
| L603 | 6140004001 | COI | LR-478A | | |
| L604 | 6140004010 | COI | LR-479 | | |
| L605 | 6140004020 | COI | LR-480 | | |
| L606 | 6140004030 | COI | LR-481 | | |
| L607 | 6110003930 | COI | LA-595 | | |
| L701 | 6180000920 | COI | LAL 03NA 221K | | |
| L703 | 6140003940 | COI | LR-493 | | |
| R1 | 7030003680 | S.RES | ERJ3GEYJ 104 V (100K) | B | 17.4/60.8 |
| R2 | 7030003560 | S.RES | ERJ3GEYJ 103 V (10K) | B | 12.6/54.5 |
| R3 | 7030003560 | S.RES | ERJ3GEYJ 103 V (10K) | T | 26.1/51.6 |
| R4 | 7030003440 | S.RES | ERJ3GEYJ 102 V (1K) | T | 14.3/47.4 |
| R5 | 7030003440 | S.RES | ERJ3GEYJ 102 V (1K) | T | 15.7/44.8 |

## [DIGISEL UNIT]

| REF NO. | PARTS NO. | DESCRIPTION | | M. | H/V LOCATION |
|---|---|---|---|---|---|
| R6 | 7030003440 | S.RES | ERJ3GEYJ 102 V (1K) | T | 15.1/46.1 |
| R7 | 7030003440 | S.RES | ERJ3GEYJ 102 V (1K) | T | 4.0/52.9 |
| R8 | 7030003440 | S.RES | ERJ3GEYJ 102 V (1K) | T | 13.3/51.9 |
| R9 | 7030003360 | S.RES | ERJ3GEYJ 221 V (220) | B | 32.0/45.9 |
| R10 | 7030003360 | S.RES | ERJ3GEYJ 221 V (220) | T | 34.6/60.0 |
| R35 | 7030003360 | S.RES | ERJ3GEYJ 221 V (220) | T | 27.9/62.4 |
| R36 | 7030003360 | S.RES | ERJ3GEYJ 221 V (220) | T | 28.6/65.8 |
| R37 | 7030003360 | S.RES | ERJ3GEYJ 221 V (220) | T | 29.3/62.4 |
| R38 | 7030003360 | S.RES | ERJ3GEYJ 221 V (220) | T | 30.0/65.8 |
| R39 | 7030003360 | S.RES | ERJ3GEYJ 221 V (220) | T | 30.7/62.4 |
| R40 | 7030003360 | S.RES | ERJ3GEYJ 221 V (220) | T | 26.5/62.4 |
| R41 | 7030003360 | S.RES | ERJ3GEYJ 221 V (220) | T | 27.2/65.8 |
| R42 | 7030003360 | S.RES | ERJ3GEYJ 221 V (220) | T | 25.8/65.8 |
| R43 | 7030003360 | S.RES | ERJ3GEYJ 221 V (220) | T | 25.1/62.4 |
| R44 | 7030003360 | S.RES | ERJ3GEYJ 221 V (220) | T | 24.4/65.8 |
| R45 | 7030003360 | S.RES | ERJ3GEYJ 221 V (220) | T | 23.7/62.4 |
| R46 | 7030003360 | S.RES | ERJ3GEYJ 221 V (220) | T | 23.0/65.8 |
| R47 | 7030003360 | S.RES | ERJ3GEYJ 221 V (220) | T | 21.2/62.4 |
| R48 | 7030003360 | S.RES | ERJ3GEYJ 221 V (220) | T | 19.1/65.8 |
| R49 | 7030003360 | S.RES | ERJ3GEYJ 221 V (220) | T | 18.4/62.4 |
| R50 | 7030003360 | S.RES | ERJ3GEYJ 221 V (220) | T | 19.8/62.4 |
| R51 | 7030003360 | S.RES | ERJ3GEYJ 221 V (220) | T | 20.5/65.8 |
| R52 | 7030003360 | S.RES | ERJ3GEYJ 221 V (220) | T | 15.6/62.4 |
| R53 | 7030003360 | S.RES | ERJ3GEYJ 221 V (220) | T | 14.9/65.8 |
| R54 | 7030003360 | S.RES | ERJ3GEYJ 221 V (220) | T | 14.2/62.4 |
| R55 | 7030003360 | S.RES | ERJ3GEYJ 221 V (220) | T | 16.3/65.8 |
| R56 | 7030003360 | S.RES | ERJ3GEYJ 221 V (220) | T | 17.0/62.4 |
| R57 | 7030003360 | S.RES | ERJ3GEYJ 221 V (220) | T | 17.7/65.8 |
| R58 | 7030003360 | S.RES | ERJ3GEYJ 221 V (220) | T | 20.9/46.4 |
| R59 | 7030003440 | S.RES | ERJ3GEYJ 102 V (1K) | T | 14.9/49.7 |
| R100 | 7030000010 | S.RES | MCR10EZHJ JPW (000) | B | 26.0/47.3 |
| R104 | 7030003560 | S.RES | ERJ3GEYJ 103 V (10K) | B | 145.1/64.1 |
| R105 | 7030003560 | S.RES | ERJ3GEYJ 103 V (10K) | B | 131.1/62.7 |
| R201 | 7030000380 | S.RES | MCR10EZHJ 1 K (102) | B | 49.4/55.6 |
| R202 | 7030000290 | S.RES | MCR10EZHJ 180 (181) | B | 49.4/51.8 |
| R203 | 7030000220 | S.RES | MCR10EZHJ 47 (470) | B | 49.4/53.7 |
| R204 | 7030003360 | S.RES | ERJ3GEYJ 221 V (220) | B | 48.2/69.7 |
| R205 | 7030003350 | S.RES | ERJ3GEYJ 181 V (180) | T | 54.5/46.5 |
| R206 | 7030003370 | S.RES | ERJ3GEYJ 271 V (270) | B | 49.4/48.7 |
| R207 | 7030003560 | S.RES | ERJ3GEYJ 103 V (10K) | T | 57.6/48.7 |
| R208 | 7030000200 | S.RES | MCR10EZHJ 33 (330) | B | 45.4/56.9 |
| R209 | 7030003240 | S.RES | ERJ3GEYJ 220 V (22) | T | 44.2/53.9 |
| R210 | 7030003370 | S.RES | ERJ3GEYJ 271 V (270) | B | 45.2/49.5 |
| R211 | 7030003370 | S.RES | ERJ3GEYJ 271 V (270) | B | 45.2/50.8 |
| R213 | 7030000220 | S.RES | MCR10EZHJ 47 (470) | B | 38.1/55.9 |
| R214 | 7030003460 | S.RES | ERJ3GEYJ 152 V (1.5K) | B | 51.6/60.0 |
| R215 | 7030003460 | S.RES | ERJ3GEYJ 152 V (1.5K) | B | 52.4/58.0 |
| R216 | 7030003680 | S.RES | ERJ3GEYJ 104 V (100K) | B | 17.4/66.4 |
| R501 | 7030003680 | S.RES | ERJ3GEYJ 104 V (100K) | B | 14.5/21.2 |
| R502 | 7030003560 | S.RES | ERJ3GEYJ 103 V (10K) | B | 25.8/25.3 |
| R503 | 7030003560 | S.RES | ERJ3GEYJ 103 V (10K) | B | 24.5/25.3 |
| R504 | 7030003440 | S.RES | ERJ3GEYJ 102 V (1K) | B | 9.7/44.6 |
| R505 | 7030003440 | S.RES | ERJ3GEYJ 102 V (1K) | T | 9.3/42.6 |
| R506 | 7030003440 | S.RES | ERJ3GEYJ 102 V (1K) | T | 3.7/28.1 |
| R507 | 7030003440 | S.RES | ERJ3GEYJ 102 V (1K) | B | 4.4/28.0 |
| R508 | 7030003440 | S.RES | ERJ3GEYJ 102 V (1K) | T | 12.9/30.8 |
| R509 | 7030003360 | S.RES | ERJ3GEYJ 221 V (220) | T | 31.1/34.8 |
| R510 | 7030003360 | S.RES | ERJ3GEYJ 221 V (220) | T | 32.2/21.9 |
| R535 | 7030003360 | S.RES | ERJ3GEYJ 221 V (220) | T | 26.4/21.9 |
| R536 | 7030003360 | S.RES | ERJ3GEYJ 221 V (220) | T | 25.7/19.0 |
| R537 | 7030003360 | S.RES | ERJ3GEYJ 221 V (220) | T | 23.6/21.9 |
| R538 | 7030003360 | S.RES | ERJ3GEYJ 221 V (220) | T | 24.3/19.0 |
| R539 | 7030003360 | S.RES | ERJ3GEYJ 221 V (220) | T | 25.0/21.9 |
| R540 | 7030003360 | S.RES | ERJ3GEYJ 221 V (220) | T | 30.1/19.0 |
| R541 | 7030003360 | S.RES | ERJ3GEYJ 221 V (220) | T | 29.4/21.9 |
| R542 | 7030003360 | S.RES | ERJ3GEYJ 221 V (220) | T | 28.7/19.0 |
| R543 | 7030003360 | S.RES | ERJ3GEYJ 221 V (220) | T | 27.9/21.9 |
| R544 | 7030003360 | S.RES | ERJ3GEYJ 221 V (220) | T | 27.2/19.0 |
| R545 | 7030003360 | S.RES | ERJ3GEYJ 221 V (220) | T | 30.8/21.9 |
| R546 | 7030003360 | S.RES | ERJ3GEYJ 221 V (220) | T | 31.5/19.0 |
| R547 | 7030003360 | S.RES | ERJ3GEYJ 221 V (220) | T | 18.0/21.9 |
| R548 | 7030003360 | S.RES | ERJ3GEYJ 221 V (220) | T | 17.3/19.1 |
| R549 | 7030003360 | S.RES | ERJ3GEYJ 221 V (220) | T | 15.2/21.9 |
| R550 | 7030003360 | S.RES | ERJ3GEYJ 221 V (220) | T | 16.6/21.9 |
| R551 | 7030003360 | S.RES | ERJ3GEYJ 221 V (220) | T | 15.9/19.1 |
| R552 | 7030003360 | S.RES | ERJ3GEYJ 221 V (220) | T | 20.1/19.2 |
| R553 | 7030003360 | S.RES | ERJ3GEYJ 221 V (220) | T | 19.4/21.9 |
| R554 | 7030003360 | S.RES | ERJ3GEYJ 221 V (220) | T | 18.7/19.1 |
| R555 | 7030003360 | S.RES | ERJ3GEYJ 221 V (220) | T | 20.9/21.9 |
| R556 | 7030003360 | S.RES | ERJ3GEYJ 221 V (220) | T | 21.6/19.2 |
| R557 | 7030003360 | S.RES | ERJ3GEYJ 221 V (220) | T | 22.3/21.9 |
| R558 | 7030003360 | S.RES | ERJ3GEYJ 221 V (220) | T | 23.5/34.2 |
| R600 | 7030000010 | S.RES | MCR10EZHJ JPW (000) | B | 30.9/33.9 |
| R604 | 7030003560 | S.RES | ERJ3GEYJ 103 V (10K) | B | 145.1/17.1 |
| R605 | 7030003560 | S.RES | ERJ3GEYJ 103 V (10K) | B | 129.1/17.1 |
| R701 | 7030000380 | S.RES | MCR10EZHJ 1 K (102) | T | 53.2/20.4 |
| R702 | 7030000290 | S.RES | MCR10EZHJ 180 (181) | T | 51.6/15.9 |
| R703 | 7030000220 | S.RES | MCR10EZHJ 47 (470) | T | 51.6/13.8 |
| R704 | 7030003360 | S.RES | ERJ3GEYJ 221 V (220) | T | 52.9/31.9 |
| R705 | 7030003350 | S.RES | ERJ3GEYJ 181 V (180) | B | 49.4/9.0 |
| R706 | 7030003370 | S.RES | ERJ3GEYJ 271 V (270) | B | 42.4/10.1 |
| R707 | 7030003560 | S.RES | ERJ3GEYJ 103 V (10K) | T | 51.3/12.2 |
| R708 | 7030000200 | S.RES | MCR10EZHJ 33 (330) | T | 43.8/25.6 |
| R709 | 7030003240 | S.RES | ERJ3GEYJ 220 V (22) | T | 46.5/19.8 |
| R710 | 7030003370 | S.RES | ERJ3GEYJ 271 V (270) | B | 45.6/19.4 |
| R711 | 7030003370 | S.RES | ERJ3GEYJ 271 V (270) | B | 45.6/21.0 |
| R713 | 7030000220 | S.RES | MCR10EZHJ 47 (470) | B | 38.8/27.4 |
| R714 | 7030003460 | S.RES | ERJ3GEYJ 152 V (1.5K) | T | 53.5/29.2 |
| R715 | 7030003460 | S.RES | ERJ3GEYJ 152 V (1.5K) | T | 51.6/30.0 |
| R716 | 7030003680 | S.RES | ERJ3GEYJ 104 V (100K) | B | 14.5/15.5 |
| C1 | 4030011600 | S.CER | C1608 JB 1E 104K-T | B | 15.3/55.5 |
| C2 | 4030011600 | S.CER | C1608 JB 1E 104K-T | T | 7.9/31.9 |
| C4 | 4030011600 | S.CER | C1608 JB 1E 104K-T | T | 31.8/50.7 |

Eqv.= This component is equivalent to the REF No. component listed above, and may be substituted on parts orders and repairs.

M.=Mounted side (T: Mounted on the Top side, B: Mounted on the Bottom side)
S.=Surface mount

## [DIGISEL UNIT]

| REF NO. | PARTS NO. | DESCRIPTION | M. | H/V LOCATION |
|---|---|---|---|---|
| C5 | 4030011600 | S.CER C1608 JB 1E 104K-T | T | 16.0/51.6 |
| C21 | 4030006880 | S.CER C1608 JB 1H 472K-T | B | 30.4/45.9 |
| C35 | 4030006880 | S.CER C1608 JB 1H 472K-T | T | 32.1/65.3 |
| C51 | 4030006880 | S.CER C1608 JB 1H 472K-T | B | 64.8/57.2 |
| C52 | 4030006880 | S.CER C1608 JB 1H 472K-T | T | 57.6/45.8 |
| C53 | 4030006880 | S.CER C1608 JB 1H 472K-T | T | 51.5/59.2 |
| C54 | 4030006880 | S.CER C1608 JB 1H 472K-T | T | 87.4/72.3 |
| C55 | 4030006880 | S.CER C1608 JB 1H 472K-T | B | 67.1/63.5 |
| C56 | 4030006880 | S.CER C1608 JB 1H 472K-T | T | 66.5/54.9 |
| C57 | 4030006880 | S.CER C1608 JB 1H 472K-T | B | 66.2/45.6 |
| C58 | 4030006880 | S.CER C1608 JB 1H 472K-T | T | 114.3/50.4 |
| C59 | 4030006880 | S.CER C1608 JB 1H 472K-T | T | 90.4/51.4 |
| C60 | 4030006880 | S.CER C1608 JB 1H 472K-T | T | 90.4/54.4 |
| C61 | 4030006880 | S.CER C1608 JB 1H 472K-T | T | 114.3/53.7 |
| C62 | 4030006880 | S.CER C1608 JB 1H 472K-T | T | 138.2/51.1 |
| C63 | 4030006880 | S.CER C1608 JB 1H 472K-T | T | 138.2/54.4 |
| C64 | 4030006880 | S.CER C1608 JB 1H 472K-T | T | 162.1/50.8 |
| C65 | 4030006880 | S.CER C1608 JB 1H 472K-T | T | 162.1/53.9 |
| C66 | 4030006880 | S.CER C1608 JB 1H 472K-T | B | 182.5/47.7 |
| C67 | 4030006880 | S.CER C1608 JB 1H 472K-T | T | 114.3/57.2 |
| C68 | 4030006880 | S.CER C1608 JB 1H 472K-T | T | 88.3/63.0 |
| C69 | 4030006880 | S.CER C1608 JB 1H 472K-T | B | 183.7/64.8 |
| C70 | 4030006880 | S.CER C1608 JB 1H 472K-T | T | 162.1/60.2 |
| C71 | 4030006880 | S.CER C1608 JB 1H 472K-T | T | 162.1/57.3 |
| C72 | 4030006880 | S.CER C1608 JB 1H 472K-T | T | 138.2/59.5 |
| C73 | 4030006880 | S.CER C1608 JB 1H 472K-T | T | 135.8/63.0 |
| C74 | 4030006880 | S.CER C1608 JB 1H 472K-T | T | 114.3/60.4 |
| C75 | 4030006880 | S.CER C1608 JB 1H 472K-T | T | 90.5/59.6 |
| C101 | 4030011340 | S.CER C1608 CH 1H 471J-T | T | 68.2/68.4 |
| C102 | 4030011280 | S.CER C1608 CH 1H 271J-T | T | 59.5/69.2 |
| C103 | 4030011280 | S.CER C1608 CH 1H 271J-T | T | 60.5/56.7 |
| C104 | 4030007130 | S.CER C1608 CH 1H 101J-T | T | 57.7/52.7 |
| C105 | 4030006940 | S.CER C1608 CH 1H 030C-T | B | 65.7/51.9 |
| C106 | 4030007150 | S.CER C1608 CH 1H 151J-T | B | 56.4/70.2 |
| C107 | 4030007150 | S.CER C1608 CH 1H 151J-T | B | 60.3/70.6 |
| C108 | 4030007150 | S.CER C1608 CH 1H 151J-T | B | 62.4/70.6 |
| C109 | 4030007150 | S.CER C1608 CH 1H 151J-T | B | 56.4/68.8 |
| C110 | 4030009520 | S.CER C1608 CH 1H 020B-T | T | 77.2/69.1 |
| C111 | 4030009550 | S.CER C1608 CH 1H 2R5B-T | T | 77.2/67.8 |
| C113 | 4030007000 | S.CER C1608 CH 1H 090D-T | T | 73.7/58.9 |
| C114 | 4030007040 | S.CER C1608 CH 1H 180J-T | T | 71.7/59.5 |
| C115 | 4030007040 | S.CER C1608 CH 1H 180J-T | T | 70.4/59.5 |
| C116 | 4030007040 | S.CER C1608 CH 1H 180J-T | T | 69.1/59.5 |
| C117 | 4030007070 | S.CER C1608 CH 1H 330J-T | T | 77.2/70.4 |
| C118 | 4030007090 | S.CER C1608 CH 1H 470J-T | B | 76.7/59.8 |
| C119 | 4030007040 | S.CER C1608 CH 1H 180J-T | B | 66.1/48.1 |
| C120 | 4030007040 | S.CER C1608 CH 1H 180J-T | B | 13.1/25.3 |
| C125 | 4030009550 | S.CER C1608 CH 1H 2R5B-T | B | 76.1/68.9 |
| C126 | 4030008360 | S.CER C1608 UJ 1H 101J-T | B | 124.5/63.3 |
| C128 | 4030009500 | S.CER C1608 CH 1H 0R5B-T | B | 107.2/55.4 |
| C129 | 4030009510 | S.CER C1608 CH 1H 010B-T | B | 83.2/55.8 |
| C130 | 4030009520 | S.CER C1608 CH 1H 020B-T | B | 97.6/55.5 |
| C131 | 4030009910 | S.CER C1608 CH 1H 040B-T | B | 121.5/55.6 |
| C132 | 4030006990 | S.CER C1608 CH 1H 080D-T | B | 131.0/55.6 |
| C133 | 4030007040 | S.CER C1608 CH 1H 180J-T | B | 145.4/55.7 |
| C134 | 4030008750 | S.CER C1608 CH 1H 360J-T | B | 154.9/55.7 |
| C135 | 4030007110 | S.CER C1608 CH 1H 680J-T | B | 169.3/55.7 |
| C136 | 4030007140 | S.CER C1608 CH 1H 121J-T | B | 178.8/55.7 |
| C137 | 4030007140 | S.CER C1608 CH 1H 121J-T | B | 107.4/63.8 |
| C138 | 4030007130 | S.CER C1608 CH 1H 101J-T | B | 107.4/62.5 |
| C139 | 4030007160 | S.CER C1608 CH 1H 181J-T | B | 83.6/62.7 |
| C140 | 4030007160 | S.CER C1608 CH 1H 181J-T | B | 83.6/64.5 |
| C141 | 4030008330 | S.CER C1608 UJ 1H 560J-T | B | 177.2/63.2 |
| C142 | 4030008330 | S.CER C1608 UJ 1H 560J-T | B | 169.3/63.2 |
| C143 | 4030007090 | S.CER C1608 CH 1H 470J-T | B | 155.2/63.2 |
| C201 | 4030011600 | S.CER C1608 JB 1E 104K-T | B | 49.1/57.2 |
| C202 | 4030006900 | S.CER C1608 JB 1H 103K-T | T | 57.7/55.4 |
| C203 | 4030011600 | S.CER C1608 JB 1E 104K-T | B | 50.4/46.3 |
| C204 | 4030011600 | S.CER C1608 JB 1E 104K-T | B | 53.2/45.4 |
| C205 | 4030011600 | S.CER C1608 JB 1E 104K-T | B | 43.4/59.6 |
| C206 | 4030011600 | S.CER C1608 JB 1E 104K-T | B | 44.4/54.6 |
| C207 | 4030006880 | S.CER C1608 JB 1H 472K-T | B | 41.1/59.6 |
| C208 | 4030007010 | S.CER C1608 CH 1H 100D-T | T | 45.0/56.1 |
| C209 | 4030006880 | S.CER C1608 JB 1H 472K-T | B | 38.1/59.6 |
| C210 | 4030006900 | S.CER C1608 JB 1H 103K-T | B | 45.2/52.1 |
| C211 | 4030009000 | S.CER C2012 JB 1C 224K-T | B | 45.6/47.9 |
| C212 | 4030006880 | S.CER C1608 JB 1H 472K-T | B | 52.4/62.0 |
| C213 | 4030006880 | S.CER C1608 JB 1H 472K-T | T | 54.5/45.1 |
| C214 | 4030006880 | S.CER C1608 JB 1H 472K-T | B | 48.5/46.3 |
| C215 | 4030006880 | S.CER C1608 JB 1H 472K-T | T | 43.8/68.4 |
| C501 | 4030011600 | S.CER C1608 JB 1E 104K-T | B | 27.1/25.3 |
| C504 | 4030011600 | S.CER C1608 JB 1E 104K-T | T | 30.8/33.4 |
| C505 | 4030011600 | S.CER C1608 JB 1E 104K-T | T | 19.5/33.7 |
| C521 | 4030006880 | S.CER C1608 JB 1H 472K-T | B | 28.0/35.0 |
| C535 | 4030006880 | S.CER C1608 JB 1H 472K-T | T | 33.5/21.9 |
| C551 | 4030006880 | S.CER C1608 JB 1H 472K-T | B | 63.6/10.9 |
| C552 | 4030006880 | S.CER C1608 JB 1H 472K-T | T | 61.5/22.9 |
| C553 | 4030006880 | S.CER C1608 JB 1H 472K-T | B | 58.0/10.2 |
| C554 | 4030006880 | S.CER C1608 JB 1H 472K-T | T | 90.3/12.9 |
| C555 | 4030006880 | S.CER C1608 JB 1H 472K-T | B | 68.8/12.6 |
| C556 | 4030006880 | S.CER C1608 JB 1H 472K-T | B | 69.8/27.9 |
| C557 | 4030006880 | S.CER C1608 JB 1H 472K-T | B | 67.4/32.9 |
| C558 | 4030006880 | S.CER C1608 JB 1H 472K-T | T | 114.3/25.9 |
| C559 | 4030006880 | S.CER C1608 JB 1H 472K-T | T | 90.4/27.1 |
| C560 | 4030006880 | S.CER C1608 JB 1H 472K-T | T | 90.4/30.5 |
| C561 | 4030006880 | S.CER C1608 JB 1H 472K-T | T | 114.3/29.9 |
| C562 | 4030006880 | S.CER C1608 JB 1H 472K-T | T | 138.2/27.1 |
| C563 | 4030006880 | S.CER C1608 JB 1H 472K-T | T | 138.2/30.5 |
| C564 | 4030006880 | S.CER C1608 JB 1H 472K-T | T | 162.1/27.2 |
| C565 | 4030006880 | S.CER C1608 JB 1H 472K-T | T | 162.1/30.4 |
| C566 | 4030006880 | S.CER C1608 JB 1H 472K-T | B | 180.9/33.5 |
| C567 | 4030006880 | S.CER C1608 JB 1H 472K-T | T | 109.8/17.8 |
| C568 | 4030006880 | S.CER C1608 JB 1H 472K-T | T | 90.4/19.5 |
| C569 | 4030006880 | S.CER C1608 JB 1H 472K-T | B | 181.8/17.1 |
| C570 | 4030006880 | S.CER C1608 JB 1H 472K-T | T | 162.1/22.4 |

## [DIGISEL UNIT]

| REF NO. | PARTS NO. | DESCRIPTION | M. | H/V LOCATION |
|---|---|---|---|---|
| C571 | 4030006880 | S.CER C1608 JB 1H 472K-T | T | 158.5/17.6 |
| C572 | 4030006880 | S.CER C1608 JB 1H 472K-T | T | 138.2/23.1 |
| C573 | 4030006880 | S.CER C1608 JB 1H 472K-T | T | 134.8/17.5 |
| C574 | 4030006880 | S.CER C1608 JB 1H 472K-T | T | 114.3/20.6 |
| C575 | 4030006880 | S.CER C1608 JB 1H 472K-T | T | 90.4/23.3 |
| C601 | 4030011340 | S.CER C1608 CH 1H 471J-T | B | 66.0/22.5 |
| C602 | 4030011280 | S.CER C1608 CH 1H 271J-T | B | 65.2/26.7 |
| C603 | 4030011280 | S.CER C1608 CH 1H 271J-T | T | 59.1/35.6 |
| C604 | 4030007130 | S.CER C1608 CH 1H 101J-T | T | 57.7/33.0 |
| C605 | 4030006940 | S.CER C1608 CH 1H 030C-T | T | 57.2/29.0 |
| C606 | 4030007150 | S.CER C1608 CH 1H 151J-T | T | 55.6/30.7 |
| C607 | 4030007150 | S.CER C1608 CH 1H 151J-T | T | 57.2/25.4 |
| C608 | 4030007150 | S.CER C1608 CH 1H 151J-T | T | 57.2/23.8 |
| C609 | 4030007150 | S.CER C1608 CH 1H 151J-T | T | 56.8/22.5 |
| C610 | 4030009520 | S.CER C1608 CH 1H 020B-T | B | 77.3/11.3 |
| C611 | 4030009550 | S.CER C1608 CH 1H 2R5B-T | B | 76.0/11.3 |
| C613 | 4030007000 | S.CER C1608 CH 1H 090D-T | B | 73.8/12.5 |
| C614 | 4030007040 | S.CER C1608 CH 1H 180J-T | B | 73.7/21.1 |
| C615 | 4030007040 | S.CER C1608 CH 1H 180J-T | B | 73.9/28.2 |
| C616 | 4030007040 | S.CER C1608 CH 1H 180J-T | B | 73.9/29.7 |
| C617 | 4030007070 | S.CER C1608 CH 1H 330J-T | B | 76.0/19.4 |
| C618 | 4030007090 | S.CER C1608 CH 1H 470J-T | T | 75.5/20.7 |
| C619 | 4030007040 | S.CER C1608 CH 1H 180J-T | T | 65.7/35.3 |
| C620 | 4030007040 | S.CER C1608 CH 1H 180J-T | T | 65.8/36.7 |
| C621 | 4030007040 | S.CER C1608 CH 1H 180J-T | T | 73.7/28.3 |
| C622 | 4030007000 | S.CER C1608 CH 1H 090D-T | T | 73.2/20.2 |
| C624 | 4030009520 | S.CER C1608 CH 1H 020B-T | T | 76.9/10.6 |
| C625 | 4030009550 | S.CER C1608 CH 1H 2R5B-T | T | 76.9/12.0 |
| C626 | 4030008360 | S.CER C1608 UJ 1H 101J-T | B | 124.5/17.4 |
| C628 | 4030009500 | S.CER C1608 CH 1H 0R5B-T | B | 107.4/25.3 |
| C629 | 4030009510 | S.CER C1608 CH 1H 010B-T | B | 83.3/25.5 |
| C630 | 4030009520 | S.CER C1608 CH 1H 020B-T | B | 97.8/25.3 |
| C631 | 4030009910 | S.CER C1608 CH 1H 040B-T | B | 121.2/25.3 |
| C632 | 4030006990 | S.CER C1608 CH 1H 080D-T | B | 131.3/25.3 |
| C633 | 4030007040 | S.CER C1608 CH 1H 180J-T | B | 145.2/25.3 |
| C634 | 4030008750 | S.CER C1608 CH 1H 360J-T | B | 155.2/25.3 |
| C635 | 4030007110 | S.CER C1608 CH 1H 680J-T | B | 169.0/25.3 |
| C636 | 4030007140 | S.CER C1608 CH 1H 121J-T | B | 179.1/25.3 |
| C637 | 4030007140 | S.CER C1608 CH 1H 121J-T | B | 107.4/18.3 |
| C638 | 4030007130 | S.CER C1608 CH 1H 101J-T | B | 107.4/16.5 |
| C639 | 4030007160 | S.CER C1608 CH 1H 181J-T | B | 83.9/18.1 |
| C640 | 4030007160 | S.CER C1608 CH 1H 181J-T | B | 84.7/16.3 |
| C641 | 4030008330 | S.CER C1608 UJ 1H 560J-T | B | 177.0/17.9 |
| C642 | 4030008330 | S.CER C1608 UJ 1H 560J-T | B | 169.0/18.0 |
| C643 | 4030007090 | S.CER C1608 CH 1H 470J-T | B | 155.5/18.0 |
| C701 | 4030011600 | S.CER C1608 JB 1E 104K-T | T | 52.3/17.7 |
| C702 | 4030006900 | S.CER C1608 JB 1H 103K-T | T | 54.6/27.3 |
| C703 | 4030011600 | S.CER C1608 JB 1E 104K-T | B | 40.3/10.4 |
| C704 | 4030011600 | S.CER C1608 JB 1E 104K-T | B | 52.1/9.8 |
| C705 | 4030011600 | S.CER C1608 JB 1E 104K-T | B | 44.0/28.1 |
| C706 | 4030011600 | S.CER C1608 JB 1E 104K-T | T | 45.1/22.6 |
| C707 | 4030006880 | S.CER C1608 JB 1H 472K-T | B | 42.7/28.1 |
| C708 | 4030007010 | S.CER C1608 CH 1H 100D-T | T | 46.5/22.7 |
| C709 | 4030006880 | S.CER C1608 JB 1H 472K-T | B | 40.6/28.9 |
| C710 | 4030006900 | S.CER C1608 JB 1H 103K-T | B | 45.6/22.7 |
| C711 | 4030009000 | S.CER C2012 JB 1C 224K-T | B | 45.7/24.4 |
| C712 | 4030006880 | S.CER C1608 JB 1H 472K-T | T | 54.8/32.3 |
| C713 | 4030006880 | S.CER C1608 JB 1H 472K-T | B | 52.1/7.9 |
| C714 | 4030006880 | S.CER C1608 JB 1H 472K-T | B | 42.4/6.5 |
| C715 | 4030006880 | S.CER C1608 JB 1H 472K-T | T | 54.2/34.3 |
| RL2 | 6330001750 | REL FTR-B4CA012Z | | |
| RL21 | 6330001750 | REL FTR-B4CA012Z | | |
| RL51 | 6330001750 | REL FTR-B4CA012Z | | |
| RL52 | 6330001750 | REL FTR-B4CA012Z | | |
| RL53 | 6330001750 | REL FTR-B4CA012Z | | |
| RL54 | 6330001750 | REL FTR-B4CA012Z | | |
| RL55 | 6330001750 | REL FTR-B4CA012Z | | |
| RL56 | 6330001750 | REL FTR-B4CA012Z | | |
| RL57 | 6330001750 | REL FTR-B4CA012Z | | |
| RL58 | 6330001750 | REL FTR-B4CA012Z | | |
| RL59 | 6330001750 | REL FTR-B4CA012Z | | |
| RL60 | 6330001750 | REL FTR-B4CA012Z | | |
| RL61 | 6330001750 | REL FTR-B4CA012Z | | |
| RL62 | 6330001750 | REL FTR-B4CA012Z | | |
| RL63 | 6330001750 | REL FTR-B4CA012Z | | |
| RL64 | 6330001750 | REL FTR-B4CA012Z | | |
| RL65 | 6330001750 | REL FTR-B4CA012Z | | |
| RL66 | 6330001750 | REL FTR-B4CA012Z | | |
| RL67 | 6330001750 | REL FTR-B4CA012Z | | |
| RL69 | 6330001750 | REL FTR-B4CA012Z | | |
| RL70 | 6330001750 | REL FTR-B4CA012Z | | |
| RL71 | 6330001750 | REL FTR-B4CA012Z | | |
| RL72 | 6330001750 | REL FTR-B4CA012Z | | |
| RL73 | 6330001750 | REL FTR-B4CA012Z | | |
| RL74 | 6330001750 | REL FTR-B4CA012Z | | |
| RL75 | 6330001750 | REL FTR-B4CA012Z | | |
| RL76 | 6330001750 | REL FTR-B4CA012Z | | |
| RL201 | 6330001750 | REL FTR-B4CA012Z | | |
| RL502 | 6330001750 | REL FTR-B4CA012Z | | |
| RL521 | 6330001750 | REL FTR-B4CA012Z | | |
| RL551 | 6330001750 | REL FTR-B4CA012Z | | |
| RL552 | 6330001750 | REL FTR-B4CA012Z | | |
| RL553 | 6330001750 | REL FTR-B4CA012Z | | |
| RL554 | 6330001750 | REL FTR-B4CA012Z | | |
| RL555 | 6330001750 | REL FTR-B4CA012Z | | |
| RL556 | 6330001750 | REL FTR-B4CA012Z | | |
| RL557 | 6330001750 | REL FTR-B4CA012Z | | |
| RL558 | 6330001750 | REL FTR-B4CA012Z | | |
| RL559 | 6330001750 | REL FTR-B4CA012Z | | |
| RL560 | 6330001750 | REL FTR-B4CA012Z | | |
| RL561 | 6330001750 | REL FTR-B4CA012Z | | |
| RL562 | 6330001750 | REL FTR-B4CA012Z | | |
| RL563 | 6330001750 | REL FTR-B4CA012Z | | |

Eqv.= This component is equivalent to the REF No. component listed above, and may be substituted on parts orders and repairs.

M.=Mounted side (T: Mounted on the Top side, B: Mounted on the Bottom side)
S.=Surface mount

## [DIGISEL UNIT]

| REF NO. | PARTS NO. | DESCRIPTION | | M. | H/V LOCATION |
|---|---|---|---|---|---|
| RL564 | 6330001750 | REL | FTR-B4CA012Z | | |
| RL565 | 6330001750 | REL | FTR-B4CA012Z | | |
| RL566 | 6330001750 | REL | FTR-B4CA012Z | | |
| RL567 | 6330001750 | REL | FTR-B4CA012Z | | |
| RL569 | 6330001750 | REL | FTR-B4CA012Z | | |
| RL570 | 6330001750 | REL | FTR-B4CA012Z | | |
| RL571 | 6330001750 | REL | FTR-B4CA012Z | | |
| RL572 | 6330001750 | REL | FTR-B4CA012Z | | |
| RL573 | 6330001750 | REL | FTR-B4CA012Z | | |
| RL574 | 6330001750 | REL | FTR-B4CA012Z | | |
| RL575 | 6330001750 | REL | FTR-B4CA012Z | | |
| RL576 | 6330001750 | REL | FTR-B4CA012Z | | |
| RL701 | 6330001750 | REL | FTR-B4CA012Z | | |
| J1 | 6510028210 | CON | SJ050010 (TMP-J01X-V6) | | |
| J2 | 6510028210 | CON | SJ050010 (TMP-J01X-V6) | | |
| J10 | 6510020081 | S.CON | 52808-2071(2090) | T | 4.5/40.5 |
| J501 | 6510028210 | CON | SJ050010 (TMP-J01X-V6) | | |
| J502 | 6510028210 | CON | SJ050010 (TMP-J01X-V6) | | |

## [NETWORK UNIT]

| REF NO. | PARTS NO. | DESCRIPTION | | M. | H/V LOCATION |
|---|---|---|---|---|---|
| Q301 | 1590000680 | S.TRA | DTC114EUA T106 | T | 64.0/45.8 |
| L50 | 6110003950 | COI | LA-598 | | |
| L60 | 6110003910 | COI | LA-593 | | |
| L70 | 6110003050 | COI | LA-492 | | |
| L80 | 6110003050 | COI | LA-492 | | |
| L90 | 6110003060 | COI | LA-493 | | |
| L100 | 6110003070 | COI | LA-494 | | |
| L110 | 6110003920 | COI | LA-594 | | |
| L120 | 6140004460 | COI | LR-504 | | |
| L130 | 6140004470 | COI | LR-505 | | |
| L131 | 6140004470 | COI | LR-505 | | |
| L300 | 6180000990 | COI | LAL 04NA 101K | | |
| R300 | 7030000420 | S.RES | MCR10EZHJ 2.2K (222) | T | 202.8/6.9 |
| R301 | 7030000420 | S.RES | MCR10EZHJ 2.2K (222) | T | 201.5/11.3 |
| R302 | 7030000420 | S.RES | MCR10EZHJ 2.2K (222) | T | 206.2/6.9 |
| R303 | 7030009800 | S.RES | ERJ12YJ121U (120) | T | 209.7/5.0 |
| C1 | 4620000150 | VAR | KB-150-07 150P | | |
| C2 | 4620000150 | VAR | KB-150-07 150P | | |
| C3 | 4010007580 | CER | HT20SJ SL 201J 3KV | | |
| C4 | 4010007580 | CER | HT20SJ SL 201J 3KV | | |
| C5 | 4010007580 | CER | HT20SJ SL 201J 3KV | | |
| C6 | 4010007580 | CER | HT20SJ SL 201J 3KV | | |
| C7 | 4010007580 | CER | HT20SJ SL 201J 3KV | | |
| C8 | 4010007580 | CER | HT20SJ SL 201J 3KV | | |
| C9 | 4010007580 | CER | HT20SJ SL 201J 3KV | | |
| C10 | 4010007580 | CER | HT20SJ SL 201J 3KV | | |
| C20 | 4010007570 | CER | HT15SJ SL 151J 3KV | | |
| C21 | 4010007570 | CER | HT15SJ SL 151J 3KV | | |
| C22 | 4010007570 | CER | HT15SJ SL 151J 3KV | | |
| C23 | 4010007570 | CER | HT15SJ SL 151J 3KV | | |
| C24 | 4010007570 | CER | HT15SJ SL 151J 3KV | | |
| C25 | 4010007570 | CER | HT15SJ SL 151J 3KV | | |
| C26 | 4010007570 | CER | HT15SJ SL 151J 3KV | | |
| C27 | 4010007570 | CER | HT15SJ SL 151J 3KV | | |
| C30 | 4010007550 | CER | HT11SJ SL 820J 3KV | | |
| C31 | 4010007550 | CER | HT11SJ SL 820J 3KV | | |
| C32 | 4010007550 | CER | HT11SJ SL 820J 3KV | | |
| C33 | 4010007550 | CER | HT11SJ SL 820J 3KV | | |
| C34 | 4010007550 | CER | HT11SJ SL 820J 3KV | | |
| C35 | 4010007550 | CER | HT11SJ SL 820J 3KV | | |
| C36 | 4010007550 | CER | HT11SJ SL 820J 3KV | | |
| C37 | 4010007550 | CER | HT11SJ SL 820J 3KV | | |
| C40 | 4010008551 | CER | DEA1X3F390JC3B-Z | | |
| C41 | 4010008551 | CER | DEA1X3F390JC3B-Z | | |
| C42 | 4010008551 | CER | DEA1X3F390JC3B-Z | | |
| C43 | 4010008551 | CER | DEA1X3F390JC3B-Z | | |
| C44 | 4010008551 | CER | DEA1X3F390JC3B-Z | | |
| C45 | 4010008551 | CER | DEA1X3F390JC3B-Z | | |
| C46 | 4010008551 | CER | DEA1X3F390JC3B-Z | | |
| C47 | 4010008551 | CER | DEA1X3F390JC3B-Z | | |
| C50 | 4030006880 | S.CER | C1608 JB 1H 472K-T | T | 140.7/12.0 |
| C60 | 4030006880 | S.CER | C1608 JB 1H 472K-T | T | 154.1/12.0 |
| C70 | 4030006880 | S.CER | C1608 JB 1H 472K-T | T | 167.5/16.1 |
| C80 | 4030006880 | S.CER | C1608 JB 1H 472K-T | T | 181.9/21.5 |
| C90 | 4030006880 | S.CER | C1608 JB 1H 472K-T | T | 195.3/21.3 |
| C100 | 4030006880 | S.CER | C1608 JB 1H 472K-T | T | 204.4/20.7 |
| C110 | 4030006880 | S.CER | C1608 JB 1H 472K-T | T | 205.8/20.7 |
| C120 | 4030006880 | S.CER | C1608 JB 1H 472K-T | B | 66.1/49.8 |
| C202 | 4030006880 | S.CER | C1608 JB 1H 472K-T | T | 187.4/13.2 |
| C203 | 4030006880 | S.CER | C1608 JB 1H 472K-T | T | 188.4/15.7 |
| C204 | 4030006880 | S.CER | C1608 JB 1H 472K-T | T | 189.4/13.2 |
| C205 | 4030006880 | S.CER | C1608 JB 1H 472K-T | T | 190.4/15.7 |
| C206 | 4030006880 | S.CER | C1608 JB 1H 472K-T | T | 191.4/13.2 |
| C207 | 4030006880 | S.CER | C1608 JB 1H 472K-T | T | 192.4/15.7 |
| C208 | 4030006880 | S.CER | C1608 JB 1H 472K-T | T | 193.4/13.2 |
| C209 | 4030006880 | S.CER | C1608 JB 1H 472K-T | T | 194.4/15.7 |
| C252 | 4030006880 | S.CER | C1608 JB 1H 472K-T | T | 175.4/13.2 |
| C253 | 4030006880 | S.CER | C1608 JB 1H 472K-T | T | 176.4/15.7 |
| C254 | 4030006880 | S.CER | C1608 JB 1H 472K-T | T | 177.4/13.2 |
| C255 | 4030006880 | S.CER | C1608 JB 1H 472K-T | T | 178.4/15.7 |
| C256 | 4030006880 | S.CER | C1608 JB 1H 472K-T | T | 179.4/13.2 |
| C257 | 4030006880 | S.CER | C1608 JB 1H 472K-T | T | 180.4/15.7 |
| C258 | 4030006880 | S.CER | C1608 JB 1H 472K-T | T | 181.4/13.2 |
| C259 | 4030006880 | S.CER | C1608 JB 1H 472K-T | T | 182.4/15.7 |
| C300 | 4030006880 | S.CER | C1608 JB 1H 472K-T | T | 184.4/13.2 |
| C301 | 4030006880 | S.CER | C1608 JB 1H 472K-T | T | 210.5/10.1 |
| RL10 | 6330001200 | REL | VS-12MBU-UC | | |
| RL11 | 6330001200 | REL | VS-12MBU-UC | | |
| RL20 | 6330001200 | REL | VS-12MBU-UC | | |
| RL21 | 6330001200 | REL | VS-12MBU-UC | | |
| RL30 | 6330001200 | REL | VS-12MBU-UC | | |
| RL31 | 6330001200 | REL | VS-12MBU-UC | | |
| RL40 | 6330001200 | REL | VS-12MBU-UC | | |
| RL41 | 6330001200 | REL | VS-12MBU-UC | | |
| RL50 | 6330001460 | REL | FTR-F1CA012V | | |
| RL60 | 6330001200 | REL | VS-12MBU-UC | | |
| RL70 | 6330001200 | REL | VS-12MBU-UC | | |
| RL80 | 6330001200 | REL | VS-12MBU-UC | | |
| RL90 | 6330001200 | REL | VS-12MBU-UC | | |
| RL100 | 6330001200 | REL | VS-12MBU-UC | | |
| RL110 | 6330001200 | REL | VS-12MBU-UC | | |
| RL120 | 6330001200 | REL | VS-12MBU-UC | | |
| J1 | 6510021561 | S.CON | 52808-2470 (2490) | T | 184.9/7.4 |
| J2 | 6510017930 | CON | 1771P145-20 | | |
| J3 | 6510017930 | CON | 1771P145-20 | | |
| J4 | 6510003521 | CON | S04B-EH-S(LF)(SN) | | |

Eqv.= This component is equivalent to the REF No. component listed above, and may be substituted on parts orders and repairs.

M.=Mounted side (T: Mounted on the Top side, B: Mounted on the Bottom side)
S.=Surface mount

## [FILTER UNIT]

| REF NO. | PARTS NO. | DESCRIPTION | | M. | H/V LOCATION |
|---|---|---|---|---|---|
| D452 | 1750000271 | S.DIO | 1SS301(TE85LF) | T | 32.0/20.5 |
| D502 | 1750000271 | S.DIO | 1SS301(TE85LF) | T | 54.8/30.3 |
| D552 | 1750000271 | S.DIO | 1SS301(TE85LF) | T | 155.6/29.1 |
| D602 | 1750000271 | S.DIO | 1SS301(TE85LF) | T | 130.1/20.3 |
| D652 | 1750000271 | S.DIO | 1SS301(TE85LF) | T | 93.8/33.0 |
| D702 | 1750000271 | S.DIO | 1SS301(TE85LF) | T | 69.6/20.3 |
| D752 | 1750000271 | S.DIO | 1SS301(TE85LF) | T | 113.1/33.0 |
| D802 | 1750000271 | S.DIO | 1SS301(TE85LF) | T | 173.6/25.9 |
| L401 | 6200005131 | S.COI | NLC453232T-101K-PF | T | 25.4/136.7 |
| L402 | 6140004310 | COI | LR-471 | | |
| L403 | 6140004300 | COI | LR-470 | | |
| L404 | 6140004300 | COI | LR-470 | | |
| L405 | 6200005131 | S.COI | NLC453232T-101K-PF | T | 7.3/24.7 |
| L451 | 6200005131 | S.COI | NLC453232T-101K-PF | T | 4.4/143.9 |
| L452 | 6140004270 | COI | LR-467 | | |
| L453 | 6140004290 | COI | LR-469 | | |
| L454 | 6140004290 | COI | LR-469 | | |
| L455 | 6200005131 | S.COI | NLC453232T-101K-PF | T | 28.4/29.9 |
| L501 | 6200005131 | S.COI | NLC453232T-101K-PF | T | 46.3/133.8 |
| L502 | 6140004280 | COI | LR-468 | | |
| L503 | 6140004270 | COI | LR-467 | | |
| L504 | 6140004270 | COI | LR-467 | | |
| L505 | 6200005131 | S.COI | NLC453232T-101K-PF | T | 50.2/29.6 |
| L551 | 6200005131 | S.COI | NLC453232T-101K-PF | T | 150.7/133.8 |
| L552 | 6140004260 | COI | LR-466 | | |
| L553 | 6140004280 | COI | LR-468 | | |
| L554 | 6140004280 | COI | LR-468 | | |
| L555 | 6200005131 | S.COI | NLC453232T-101K-PF | T | 151.0/29.7 |
| L601 | 6200005131 | S.COI | NLC453232T-101K-PF | T | 129.9/133.8 |
| L602 | 6140004250 | COI | LR-465 | | |
| L603 | 6140004240 | COI | LR-464 | | |
| L604 | 6140004240 | COI | LR-464 | | |
| L605 | 6200005131 | S.COI | NLC453232T-101K-PF | T | 130.1/14.2 |
| L651 | 6200005131 | S.COI | NLC453232T-101K-PF | T | 73.2/35.5 |
| L652 | 6140004200 | COI | LR-463 | | |
| L653 | 6140004170 | COI | LR-462 | | |
| L654 | 6140004170 | COI | LR-462 | | |
| L655 | 6200005131 | S.COI | NLC453232T-101K-PF | T | 92.3/29.8 |
| L701 | 6200005131 | S.COI | NLC453232T-101K-PF | T | 67.2/133.8 |
| L702 | 6140004130 | COI | LR-461 | | |
| L703 | 6140004070 | COI | LR-460 | | |
| L704 | 6140004070 | COI | LR-460 | | |
| L705 | 6200005131 | S.COI | NLC453232T-101K-PF | T | 69.6/14.1 |
| L751 | 6200005131 | S.COI | NLC453232T-101K-PF | T | 109.1/133.8 |
| L752 | 6110003900 | COI | LA-592 | | |
| L753 | 6110003890 | COI | LA-591 | | |
| L754 | 6110003890 | COI | LA-591 | | |
| L755 | 6200005131 | S.COI | NLC453232T-101K-PF | T | 111.4/29.8 |
| L801 | 6200001831 | S.COI | NLV32T-100J | T | 37.2/23.4 |
| L802 | 6110003880 | COI | LA-590 | | |
| L803 | 6110003870 | COI | LA-589 | | |
| L804 | 6110003870 | COI | LA-589 | | |
| L805 | 6200001831 | S.COI | NLV32T-100J | T | 173.9/22.8 |
| C401 | 4030006880 | S.CER | C1608 JB 1H 472K-T | T | 25.4/130.4 |
| C402 | 4010008200 | CER | HM11TJ SL 331J 500V | | |
| C403 | 4010008200 | CER | HM11TJ SL 331J 500V | | |
| C404 | 4010008300 | CER | HM11TJ SL 391J 500V | | |
| C405 | 4010008300 | CER | HM11TJ SL 391J 500V | | |
| C406 | 4010008210 | CER | HM60TJ SL 560J 500V | | |
| C407 | 4010007590 | CER | HM15SJ SL 681J 500V | | |
| C408 | 4010007590 | CER | HM15SJ SL 681J 500V | | |
| C409 | 4010007590 | CER | HM15SJ SL 681J 500V | | |
| C410 | 4010005870 | CER | HM95SJ SL 221J 500V | | |
| C411 | 4010008280 | CER | HM95TJ SL 221J 500V | | |
| C412 | 4010008370 | CER | HM60TJ SL 150J 500V | | |
| C413 | 4010007590 | CER | HM15SJ SL 681J 500V | | |
| C414 | 4010007590 | CER | HM15SJ SL 681J 500V | | |
| C415 | 4010007590 | CER | HM15SJ SL 681J 500V | | |
| C416 | 4010008300 | CER | HM11TJ SL 391J 500V | | |
| C417 | 4010008230 | CER | HM60TJ SL 820J 500V | | |
| C418 | 4010007590 | CER | HM15SJ SL 681J 500V | | |
| C419 | 4010007590 | CER | HM15SJ SL 681J 500V | | |
| C420 | 4030006880 | S.CER | C1608 JB 1H 472K-T | T | 11.7/26.4 |
| C451 | 4030006880 | S.CER | C1608 JB 1H 472K-T | T | 26.6/127.9 |
| C452 | 4010008290 | CER | HM95TJ SL 271J 500V | | |
| C453 | 4010008280 | CER | HM95TJ SL 221J 500V | | |
| C454 | 4010008240 | CER | HM60TJ SL 101J 500V | | |
| C455 | 4010005810 | CER | HM74SJ SL 111J 500V | | |
| C456 | 4010007490 | CER | HM15SJ SL 561J 500V | | |
| C457 | 4010006410 | CER | HM13SJ SL 471J 500V | | |
| C458 | 4010008250 | CER | HM74TJ SL 121J 500V | | |
| C459 | 4010005810 | CER | HM74SJ SL 111J 500V | | |
| C461 | 4010007490 | CER | HM15SJ SL 561J 500V | | |
| C462 | 4010007490 | CER | HM15SJ SL 561J 500V | | |
| C463 | 4010008340 | CER | HM60TJ SL 270J 500V | | |
| C464 | 4010008320 | CER | HM60TJ SL 390J 500V | | |
| C465 | 4010007490 | CER | HM15SJ SL 561J 500V | | |
| C466 | 4010008220 | CER | HM60TJ SL 680J 500V | | |
| C467 | 4030006880 | S.CER | C1608 JB 1H 472K-T | T | 32.4/23.4 |
| C468 | 4010008230 | CER | HM60TJ SL 820J 500V | | |
| C501 | 4030006880 | S.CER | C1608 JB 1H 472K-T | T | 47.6/127.3 |
| C502 | 4010008280 | CER | HM95TJ SL 221J 500V | | |
| C503 | 4010008260 | CER | HM74TJ SL 151J 500V | | |
| C504 | 4010008280 | CER | HM95TJ SL 221J 500V | | |
| C506 | 4010008200 | CER | HM11TJ SL 331J 500V | | |
| C507 | 4010008280 | CER | HM95TJ SL 221J 500V | | |
| C508 | 4010008280 | CER | HM95TJ SL 221J 500V | | |
| C509 | 4010005810 | CER | HM74SJ SL 111J 500V | | |
| C511 | 4010008300 | CER | HM11TJ SL 391J 500V | | |
| C512 | 4010008300 | CER | HM11TJ SL 391J 500V | | |
| C513 | 4010008260 | CER | HM74TJ SL 151J 500V | | |

## [FILTER UNIT]

| REF NO. | PARTS NO. | DESCRIPTION | | M. | H/V LOCATION |
|---|---|---|---|---|---|
| C514 | 4010008320 | CER | HM60TJ SL 390J 500V | | |
| C515 | 4010008280 | CER | HM95TJ SL 221J 500V | | |
| C516 | 4010008280 | CER | HM95TJ SL 221J 500V | | |
| C517 | 4030006880 | S.CER | C1608 JB 1H 472K-T | T | 54.7/28.4 |
| C518 | 4010008340 | CER | HM60TJ SL 270J 500V | | |
| C551 | 4030006880 | S.CER | C1608 JB 1H 472K-T | T | 149.9/122.5 |
| C552 | 4010005860 | CER | HM95SJ SL 201J 500V | | |
| C554 | 4010008230 | CER | HM60TJ SL 820J 500V | | |
| C555 | 4010008370 | CER | HM60TJ SL 150J 500V | | |
| C556 | 4010008290 | CER | HM95TJ SL 271J 500V | | |
| C557 | 4010008290 | CER | HM95TJ SL 271J 500V | | |
| C558 | 4010008320 | CER | HM60TJ SL 390J 500V | | |
| C559 | 4010008330 | CER | HM60TJ SL 330J 500V | | |
| C560 | 4010008340 | CER | HM60TJ SL 270J 500V | | |
| C561 | 4010008200 | CER | HM11TJ SL 331J 500V | | |
| C562 | 4010008290 | CER | HM95TJ SL 271J 500V | | |
| C563 | 4010008330 | CER | HM60TJ SL 330J 500V | | |
| C564 | 4010005650 | CER | HM60SJ SL 200J 500V | | |
| C565 | 4010008280 | CER | HM95TJ SL 221J 500V | | |
| C566 | 4010008350 | CER | HM60TJ SL 220J 500V | | |
| C567 | 4030006880 | S.CER | C1608 JB 1H 472K-T | T | 152.2/32.2 |
| C601 | 4030006880 | S.CER | C1608 JB 1H 472K-T | T | 130.2/125.0 |
| C604 | 4010008230 | CER | HM60TJ SL 820J 500V | | |
| C605 | 4010008370 | CER | HM60TJ SL 150J 500V | | |
| C606 | 4010008280 | CER | HM95TJ SL 221J 500V | | |
| C607 | 4010008220 | CER | HM60TJ SL 680J 500V | | |
| C608 | 4010008350 | CER | HM60TJ SL 220J 500V | | |
| C609 | 4010008340 | CER | HM60TJ SL 270J 500V | | |
| C610 | 4010008200 | CER | HM11TJ SL 331J 500V | | |
| C611 | 4010008230 | CER | HM60TJ SL 820J 500V | | |
| C612 | 4010008360 | CER | HM60TJ SL 180J 500V | | |
| C613 | 4010008260 | CER | HM74TJ SL 151J 500V | | |
| C614 | 4010008230 | CER | HM60TJ SL 820J 500V | | |
| C615 | 4030006880 | S.CER | C1608 JB 1H 472K-T | T | 130.2/18.3 |
| C651 | 4030006880 | S.CER | C1608 JB 1H 472K-T | T | 88.3/124.9 |
| C654 | 4010008360 | CER | HM60TJ SL 180J 500V | | |
| C655 | 4010008320 | CER | HM60TJ SL 390J 500V | | |
| C656 | 4010008280 | CER | HM95TJ SL 221J 500V | | |
| C657 | 4010008220 | CER | HM60TJ SL 680J 500V | | |
| C658 | 4010008360 | CER | HM60TJ SL 180J 500V | | |
| C659 | 4010008380 | CER | HM60TJ SL 120J 500V | | |
| C660 | 4010008280 | CER | HM95TJ SL 221J 500V | | |
| C661 | 4010008240 | CER | HM60TJ SL 101J 500V | | |
| C662 | 4010008390 | CER | HM60TJ SL 100D 500V | | |
| C663 | 4010008250 | CER | HM74TJ SL 121J 500V | | |
| C664 | 4010008320 | CER | HM60TJ SL 390J 500V | | |
| C665 | 4030006880 | S.CER | C1608 JB 1H 472K-T | T | 96.6/28.6 |
| C701 | 4030006880 | S.CER | C1608 JB 1H 472K-T | T | 68.6/127.5 |
| C703 | 4010008370 | CER | HM60TJ SL 150J 500V | | |
| C704 | 4010008350 | CER | HM60TJ SL 220J 500V | | |
| C705 | 4010005650 | CER | HM60SJ SL 200J 500V | | |
| C706 | 4010005860 | CER | HM95SJ SL 201J 500V | | |
| C707 | 4010008310 | CER | HM60TJ SL 470J 500V | | |
| C708 | 4010008370 | CER | HM60TJ SL 150J 500V | | |
| C709 | 4010008280 | CER | HM95TJ SL 221J 500V | | |
| C710 | 4010008350 | CER | HM60TJ SL 220J 500V | | |
| C712 | 4010008330 | CER | HM60TJ SL 330J 500V | | |
| C713 | 4010008310 | CER | HM60TJ SL 470J 500V | | |
| C714 | 4030006880 | S.CER | C1608 JB 1H 472K-T | T | 69.6/18.3 |
| C715 | 4010008360 | CER | HM60TJ SL 180J 500V | | |
| C751 | 4030006880 | S.CER | C1608 JB 1H 472K-T | T | 109.1/125.0 |
| C755 | 4010008240 | CER | HM60TJ SL 101J 500V | | |
| C756 | 4010008230 | CER | HM60TJ SL 820J 500V | | |
| C757 | 4010008360 | CER | HM60TJ SL 180J 500V | | |
| C758 | 4010008210 | CER | HM60TJ SL 560J 500V | | |
| C759 | 4010008240 | CER | HM60TJ SL 101J 500V | | |
| C760 | 4010008400 | CER | HM60TJ SL 060D 500V | | |
| C761 | 4010008310 | CER | HM60TJ SL 470J 500V | | |
| C763 | 4030006880 | S.CER | C1608 JB 1H 472K-T | T | 115.6/28.6 |
| C764 | 4010005650 | CER | HM60SJ SL 200J 500V | | |
| C765 | 4010008370 | CER | HM60TJ SL 150J 500V | | |
| C801 | 4030006880 | S.CER | C1608 JB 1H 472K-T | T | 168.6/158.6 |
| C804 | 4010005600 | CER | HM60SJ SL 090D 500V | | |
| C805 | 4010008320 | CER | HM60TJ SL 390J 500V | | |
| C806 | 4010008310 | CER | HM60TJ SL 470J 500V | | |
| C807 | 4010005600 | CER | HM60SJ SL 090D 500V | | |
| C808 | 4010008330 | CER | HM60TJ SL 330J 500V | | |
| C809 | 4010008320 | CER | HM60TJ SL 390J 500V | | |
| C810 | 4010008410 | CER | HM60TJ SL 030C 500V | | |
| C811 | 4010005560 | CER | HM60SJ SL 050C 500V | | |
| C813 | 4030006880 | S.CER | C1608 JB 1H 472K-T | T | 175.6/26.0 |
| C814 | 4010005600 | CER | HM60SJ SL 090D 500V | | |
| RL401 | 6330001471 | REL | AJS1311F-K2 | | |
| RL402 | 6330001471 | REL | AJS1311F-K2 | | |
| RL451 | 6330001471 | REL | AJS1311F-K2 | | |
| RL452 | 6330001471 | REL | AJS1311F-K2 | | |
| RL501 | 6330001471 | REL | AJS1311F-K2 | | |
| RL502 | 6330001471 | REL | AJS1311F-K2 | | |
| RL551 | 6330001471 | REL | AJS1311F-K2 | | |
| RL552 | 6330001471 | REL | AJS1311F-K2 | | |
| RL601 | 6330001471 | REL | AJS1311F-K2 | | |
| RL602 | 6330001471 | REL | AJS1311F-K2 | | |
| RL651 | 6330001471 | REL | AJS1311F-K2 | | |
| RL652 | 6330001471 | REL | AJS1311F-K2 | | |
| RL701 | 6330001471 | REL | AJS1311F-K2 | | |
| RL702 | 6330001471 | REL | AJS1311F-K2 | | |
| RL751 | 6330001471 | REL | AJS1311F-K2 | | |
| RL752 | 6330001471 | REL | AJS1311F-K2 | | |
| RL801 | 6330001460 | REL | FTR-F1CA012V | | |
| RL802 | 6330001460 | REL | FTR-F1CA012V | | |
| J901 | 6510017930 | CON | 1771P145-20 | | |

Eqv.= This component is equivalent to the REF No. component listed above, and may be substituted on parts orders and repairs.

M.=Mounted side (T: Mounted on the Top side, B: Mounted on the Bottom side)
S.=Surface mount

## [FILTER UNIT]

| REF NO. | PARTS NO. | DESCRIPTION | M. | H/V LOCATION |
|---|---|---|---|---|
| J902 | 6510022031 | S.CON B10B-ZR-SM4-TF(LF)(SN) | T | 145.3/165.2 |
| J903 | 6510019971 | S.CON 52808-1071 | T | 4.0/156.0 |
| J904 | 6510017930 | CON 1771P145-20 | | |
| J905 | 6510019421 | S.CON B8B-ZR-SM4-TF(LF)(SN) | T | 146.8/160.2 |

## [MEMORY UNIT]

| REF NO. | PARTS NO. | DESCRIPTION | M. | H/V LOCATION |
|---|---|---|---|---|
| IC1 | 1130013519 | S.IC JS28F128J3D-75(SX-2590A-13) | T | 39.8/26.3 |
| IC2 | 1130013480 | S.IC JS28F128J3D-75 | T | 24.0/26.3 |
| C1 | 4030011600 | S.CER C1608 JB 1E 104K-T | T | 41.8/38.8 |
| C2 | 4030011600 | S.CER C1608 JB 1E 104K-T | T | 39.9/13.2 |
| C3 | 4030011600 | S.CER C1608 JB 1E 104K-T | T | 36.9/13.2 |
| C4 | 4030011600 | S.CER C1608 JB 1E 104K-T | T | 26.0/38.8 |
| C5 | 4030011600 | S.CER C1608 JB 1E 104K-T | T | 24.0/13.2 |
| C6 | 4030011600 | S.CER C1608 JB 1E 104K-T | T | 21.0/13.2 |
| J1 | 6510024211 | S.CON AXK6S30437YG | T | 55.0/20.0 |
| J2 | 6510024201 | S.CON AXK6S40437YG | T | 10.0/20.0 |

Eqv.= This component is equivalent to the REF No. component listed above, and may be substituted on parts orders and repairs.

M.=Mounted side (T: Mounted on the Top side, B: Mounted on the Bottom side)
S.=Surface mount

# SECTION 6 MECHANICAL PARTS

## [CHASSIS PARTS]

| REF NO. | ORDER NO. | DESCRIPTION | QTY. |
|---|---|---|---|
| W1** | 8900017890 | OPC-1330A (P0.5N40L350) | 1 |
| W2** | 8900017890 | OPC-1330A (P0.5N40L350) | 1 |
| W3** | 8900017950 | OPC-1338A (P1N22L150) | 1 |
| W4** | 8900017960 | OPC-1339A (P1N22L320) | 1 |
| W5** | 8900012940 | OPC-1337 (N=20L=300)* | 1 |
| W6** | 8900017910 | OPC-1334A (P1N12L260) | 1 |
| W7** | 8900012960 | OPC-1340 (N=24L=570)* | 1 |
| W8** | 8900013730 | OPC-1428 (N=20L=100) | 1 |
| W9** | 8900017900 | OPC-1333A (P0.5N40L180) | 1 |
| W10** | 8900017990 | OPC-1343A (P0.5N50L100) | 1 |
| W11** | 8900017920 | OPC-1335A (P1N10L220) | 1 |
| W12** | 8900012740 | OPC-1240 | 1 |
| W13** | 8900012750 | OPC-1241 | 1 |
| W14** | 8900012761 | OPC-1242A | 1 |
| W15** | 8900018000 | OPC-1344A (P1N10L70) | 1 |
| W16** | 8900017980 | OPC-1341A (P1N30L70) | 1 |
| W17** | 8900015150 | OPC-911A (P1N16L70) | 1 |
| W18** | 8900015150 | OPC-911A (P1N16L70) | 1 |
| W23** | 8900013031 | OPC-1346R | 1 |
| W24** | 8900013041 | OPC-1347R | 1 |
| W25** | 8900013051 | OPC-1348R | 1 |
| W26** | 8900014730 | OPC-683A (P1N10L110) | 1 |
| W27** | 8900013060 | OPC-1349 | 1 |
| W28** | 8900012800 | OPC-1300 | 1 |
| W51** | 8600036960 | SX2590 P51*P52CH | 1 |
| W53** | 8600036970 | SX2590 P53*P54CH | 1 |
| W66** | 8600036980 | SX2590 P55*P56CH | 1 |
| W73** | 8600036990 | SX2590 P57*P58CH | 1 |
| W83** | 8970024202 | 1.5DCOAXIAL300MM-2 C31/C31 | 1 |
| W85** | 8600037000 | SX2590 P61*P62CH | 1 |
| W87** | 8970024402 | 1.5DCOAXIAL360MM-2 (D/L)C31/C31 | 1 |
| W89** | 8970024202 | 1.5DCOAXIAL300MM-2 C31/C31 | 1 |
| W91** | 8970024412 | 1.5DCOAXIAL330MM-2 (T) C31/C31 | 1 |
| W93** | 8600037010 | SX2590 P69*P70CH | 1 |
| W95** | 8970024491 | 1.5D 360MM -1 (SX2590CH W95 | 1 |
| W97** | 8970024431 | 0.8DCOAXIAL760MM-1 C31/C31 | 1 |
| W99** | 8970024421 | 1.5DCOAXIAL480MM-1 (K) C31/C31 | 1 |
| W101** | 8600037020 | SX2590 P77*P78CH | 1 |
| W106** | 8970024312 | 1.5DCOAXIAL420MM-2 (A) C31/C31 | 1 |
| W108** | 8600037030 | SX2590 P81*P82CH | 1 |
| W119** | 8600037040 | SX2590 P83*P84CH | 1 |
| W127** | 8970024442 | 1.5DCOAXIAL510MM-2 (B) C31/C31 | 1 |
| W129** | 8970024402 | 1.5DCOAXIAL360MM-2 (D/L)C31/C31 | 1 |
| W131** | 8970024481 | 1.5D 270MM-1 (SX2590CH W131 | 1 |
| W133** | 8970024521 | 1.5D 420MM-1 (SX2590CH W133 | 1 |
| W135** | 8970024511 | 1.5D 300MM-1 (SX2590CH W135 | 1 |
| W137** | 8970024331 | 1.5D 600MM-1 (SX2590CH W137 | 1 |
| W139** | 8970024471 | 1.5D 510MM-1 (SX2590CH W139 | 1 |
| W141** | 8970024461 | 1.5DCOAXIAL570MM-1 (J) C31/C31 | 1 |
| W143** | 8970024202 | 1.5DCOAXIAL300MM-2 C31/C31 | 1 |
| W145** | 8970024412 | 1.5DCOAXIAL330MM-2 (T) C31/C31 | 1 |
| W147** | 8970024202 | 1.5DCOAXIAL300MM-2 C31/C31 | 1 |
| W149** | 8970024452 | 1.5DCOAXIAL270MM -2 (G) C31/C31 | 1 |
| W151** | 8970024452 | 1.5DCOAXIAL270MM -2 (G) C31/C31 | 1 |
| W153** | 8970024461 | 1.5DCOAXIAL570MM-1 (J) C31/C31 | 1 |
| W155** | 8970024452 | 1.5DCOAXIAL270MM -2 (G) C31/C31 | 1 |
| W157** | 8970024292 | 1.5DCOAXIAL150MM-2 C31/C31 | 1 |
| W159** | 8970024312 | 1.5DCOAXIAL420MM-2 (A) C31/C31 | 1 |
| W161** | 8600037060 | SX2590 P119*P120CH | 1 |
| W171** | 8600037070 | SX2590 P121*P122CH | 1 |
| W176** | 8970024402 | 1.5DCOAXIAL360MM-2 (D/L)C31/C31 | 1 |
| W178** | 8900013441 | OPC-1388A | 1 |
| SP1 | 2510001260 | 2590 SP BOX | 1 |
| MF1 | 2710000831 | FD124010HB-1N7 (065)-1 <USE>2 | 1 |
| EP5 | 6910011941 | ZCAT2436-1330A-BK | 1 |
| EP6 | 6910011960 | ZCAT1518-0730 | 1 |
| MP1 | 8930040720 | 1768 B-CLIP Y305 | 1 |
| MP2 | 8930061281 | 2590 ANT ANGLE-1 | 1 |
| MP4 | 8510016031 | 2590 BPF CASE-1 | 1 |
| MP5 | 8510016040 | 2590 BPF S-COVER | 1 |
| MP6 | 8010019285 | 2590 CHASSIS-5 | 1 |
| MP7 | 8930061720 | 2590 DIGISEL PLATE Y705 | 1 |
| MP8 | 8930062320 | 2590 A-DIGISEL SPONGE | 1 |
| MP10 | 8510015851 | 2590 FILTER CASE-1 | 1 |
| MP11 | 8110008083 | 2590 L-COVER-3 | 1 |
| MP12 | 8110008091 | 2590 LOGIC COVER-1 | 1 |
| MP13 | 8930063180 | 2590 MAIN STAND ASSEMBLY | 2 |
| MP14 | 8930061960 | 2590 M-FAN ANGLE Y704 | 1 |
| MP15 | 8930061761 | 2590 M-JACK ANGLE-1 | 1 |
| MP16 | 8510016101 | 2590 PLL PLATE-1 Y706A | 2 |
| MP17 | 8510016010 | 2590 P-R COVER | 1 |
| MP18 | 8210020462 | 2590 REAR PANEL-2 | 1 |
| MP20 | 8510015860 | 2590 SCOPE COVER | 1 |
| MP21 | 8210019821 | 2590 SIDE PANEL-1 RO | 2 |
| MP22 | 8930062010 | 2590 S-JACK ANGLE Y707 | 1 |
| MP23 | 8930061950 | 2590 SP ANGLE | 1 |

## [CHASSIS PARTS]

| REF NO. | ORDER NO. | DESCRIPTION | QTY. |
|---|---|---|---|
| MP27 | 8110008073 | 2590 U-COVER-3 | 1 |
| MP101 | 8810007231 | SET SCREWH M3 X 8 ZC3 | 4 |
| MP102 | 8810007231 | SET SCREWH M3 X 8 ZC3 | 1 |
| MP103 | 8810009111 | PH M2.6X16 ZK3 | 2 |
| MP104 | 8810005771 | BIND M3 X 8 ZK3BLACK | 2 |
| MP105 | 8810005771 | BIND M3 X 8 ZK3BLACK | 2 |
| MP106 | 8810008451 | BIND M4 X 8 ZK3 | 4 |
| MP107 | 8810005771 | BIND M3 X 8 ZK3BLACK | 8 |
| MP108 | 8810008451 | BIND M4 X 8 ZK3 | 14 |
| MP109 | 8810008451 | BIND M4 X 8 ZK3 | 13 |
| MP110 | 8810008451 | BIND M4 X 8 ZK3 | 4 |
| MP111 | 8810008451 | BIND M4 X 8 ZK3 | 2 |
| MP112 | 8810008451 | BIND M4 X 8 ZK3 | 2 |
| MP113 | 8930011680 | RUBBER LEG (G) | 2 |
| MP114 | 8810009651 | FLAT BT M3 X 8 NI-ZC3 | 20 |
| MP115 | 8810009651 | FLAT BT M3 X 8 NI-ZC3 | 4 |
| MP116 | 8810009461 | FLAT M3 X 8 ZK3 | 4 |
| MP117 | 8810009461 | FLAT M3 X 8 ZK3 | 2 |
| MP118 | 8810009461 | FLAT M3 X 8 ZK3 | 1 |
| MP119 | 8810009461 | FLAT M3 X 8 ZK3 | 4 |
| MP120 | 8810008631 | PHBT M3 X 6 NI-ZC3 | 6 |
| MP121 | 8810008661 | PHBT M3 X 8 NI-ZC3 | 14 |
| MP122 | 8810008661 | PHBT M3 X 8 NI-ZC3 | 7 |
| MP123 | 8810008661 | PHBT M3 X 8 NI-ZC3 | 5 |
| MP124 | 8810008661 | PHBT M3 X 8 NI-ZC3 | 26 |
| MP125 | 8810008661 | PHBT M3 X 8 NI-ZC3 | 7 |
| MP126 | 8810008661 | PHBT M3 X 8 NI-ZC3 | 6 |
| MP127 | 8810008661 | PHBT M3 X 8 NI-ZC3 | 4 |
| MP128 | 8810008661 | PHBT M3 X 8 NI-ZC3 | 3 |
| MP129 | 8810008661 | PHBT M3 X 8 NI-ZC3 | 2 |
| MP130 | 8810008661 | PHBT M3 X 8 NI-ZC3 | 2 |
| MP131 | 8810008661 | PHBT M3 X 8 NI-ZC3 | 4 |
| MP132 | 8810008661 | PHBT M3 X 8 NI-ZC3 | 7 |
| MP133 | 8810008661 | PHBT M3 X 8 NI-ZC3 | 2 |
| MP135 | 8810008661 | PHBT M3 X 8 NI-ZC3 | 4 |
| MP136 | 8810008661 | PHBT M3 X 8 NI-ZC3 | 2 |
| MP137 | 8810008661 | PHBT M3 X 8 NI-ZC3 | 1 |
| MP138 | 8810008661 | PHBT M3 X 8 NI-ZC3 | 4 |
| MP139 | 8810008661 | PHBT M3 X 8 NI-ZC3 | 4 |
| MP140 | 8810008661 | PHBT M3 X 8 NI-ZC3 | 11 |
| MP141 | 8810004431 | PH M3 X 6 ZK3 | 2 |
| MP142 | 8810004431 | PH M3 X 6 ZK3 | 4 |
| MP143 | 8810009991 | PHBT M3 X 8 NI-ZK3 | 1 |
| MP144 | 8810004431 | PH M3 X 6 ZK3 | 4 |
| MP145 | 8810000391 | PH M4 X12 ZC3 | 2 |
| MP146 | 8830000360 | NUT M 5 NI | 1 |
| MP147 | 8930028390 | THERMAL SHEET AH | 1 |
| MP148 | 8850000150 | FLAT WASHER M 5 NI BS | 2 |
| MP150 | 8930070820 | SHIELD SPONGE (BK) | 1 |
| MP151 | 8930070820 | SHIELD SPONGE (BK) | 1 |
| MP152 | 8930017191 | EARTH SPRING (F)-1 | 1 |
| MP153 | 8930017191 | EARTH SPRING (F)-1 | 1 |
| MP154 | 8510016281 | 2590 K-PLATE-1 -TYPEY2101A | 1 |
| MP155 | 8930056160 | DOUBLE SIDE TAPE (AG) | 4 |
| MP156 | 8810004431 | PH M3 X 6 ZK3 | 1 |
| MP157 | 8930065730 | 2590 E-EARTH SPRING | 1 |
| MP158 | 8930062720 | SPONGE (HS) | 1 |
| MP159 | 8930062270 | 2590 A-NET | 1 |
| MP160 | 8930062280 | 2590 B-NET | 1 |
| MP161 | 8930062290 | 2590 C-NET | 1 |
| MP162 | 8930062360 | 2590 D-NET | 1 |
| MP163 | 8930006960 | SPONGE (Y) | 1 |
| MP164 | 8930062770 | HIMELON SHEET (CN) | 1 |
| MP165 | 8930058170 | SHIELD SPONGE (O) | 1 |
| MP166 | 8930058170 | SHIELD SPONGE (O) | 1 |
| MP167 | 8930017191 | EARTH SPRING (F)-1 | 1 |
| MP169 | 8930063220 | AL SHEET (AJ) | 1 |
| MP171 | 8930028840 | SPONGE (DF) | 1 |
| MP172 | 8930056020 | SPONGE (GU) | 1 |
| MP173 | 8930056020 | SPONGE (GU) | 1 |
| MP174 | 8930048961 | SHIELD TAPE (B)-1 | 2 |
| MP175 | 8930056020 | SPONGE (GU) | 2 |
| MP176 | 8950000180 | CABLE TIE -80 (DENNISON DS-80) | 4 |
| MP177 | 8950000180 | CABLE TIE -80 (DENNISON DS-80) | 1 |
| MP178 | 8950002460 | S-10 | 1 |
| MP179 | 8930063450 | SHIELD SPONGE (AG) | 6 |
| MP180 | 8930063260 | SPONGE (HV) | 1 |
| MP181 | 8930056401 | SHIELD SPONGE (H)-1 | 1 |
| MP182 | 8930063700 | AL SHEET (AL) | 1 |
| MP184 | 8930061490 | SHIELD SPONGE (AB) | 1 |
| MP185 | 8930063780 | SHIELD SPONGE (AJ) | 1 |
| MP186 | 8930058840 | SHIELD SPONGE (T) | 1 |
| MP187 | 6910008240 | 59TN4772 | 1 |
| MP188 | 8930063560 | EMBOSS TAPE (O) | 4 |
| MP189 | 8930006960 | SPONGE (Y) | 1 |
| MP190 | 8930036870 | SPONGE (DZ) | 2 |
| MP191 | 8930070720 | SHIELD SPONGE (BJ) | 2 |

*: Refer to "**BOARD LAYOUTS**" for the location.
**: Refer to "**GENERAL WIRING**" for the connection
**Screw abbreviations** A, B0, BT: Self-tapping PH: Pan head ZK: Black NI-ZU: Nickel-Zinc SUS: Stainless

## [FRONT UNIT]

| REF NO. | ORDER NO. | DESCRIPTION | QTY. |
|---|---|---|---|
| MP7 | 8210024950 | 2590 10-KEY (KNOB 4) | 1 |
| MP23 | 8930062562 | 2590 LENS HOLDER-2 ASSEMBLY | 1 |
| MP28 | 8310061241 | 2590 WINDOW FRAME-1 ASSEMBLY | 1 |
| MP33 | 8610012052 | KNOB K230-2 ASSEMBLY | 1 |
| MP34 | 8610012061 | KNOB K231-1 ASSEMBLY | 1 |
| MP35 | 8610012071 | KNOB K232-1 ASSEMBLY | 2 |
| MP48 | 8610012081 | KNOB K241-1 ASSEMBLY | 1 |
| MP71 | 8610012100 | 2590 KNOB | 1 |
| W1** | 8900015930 | OPC-886A (P1N10L75) | 1 |
| W2** | 8900015930 | OPC-886A (P1N10L75) | 1 |
| W3** | 8900017810 | OPC-1331A (P0.5N40L70) | 1 |
| W4** | 8900017880 | OPC-849A (P0.5N30L70) | 1 |
| W5** | 8900015930 | OPC-886A (P1N10L75) | 1 |
| W6** | 8900015930 | OPC-886A (P1N10L75) | 1 |
| W7** | 8900017930 | OPC-1336A (P1N18L70) | 1 |
| W8** | 8900015930 | OPC-886A (P1N10L75) | 1 |
| W9** | 8900014871 | OPC-1332A-1 (P0.5N40L100) TJM | 1 |
| W10** | 8900014730 | OPC-683A (P1N10L110) | 1 |
| W11** | 8900017880 | OPC-849A (P0.5N30L70) | 1 |
| W12** | 8900017880 | OPC-849A (P0.5N30L70) | 1 |
| W13** | 8900015930 | OPC-886A (P1N10L75) | 1 |
| W14** | 8900017880 | OPC-849A (P0.5N30L70) | 1 |
| W15** | 8900015930 | OPC-886A (P1N10L75) | 1 |
| W51** | 8600037050 | SX2590 P51*P52FR | 1 |
| EP1 | 6910015291 | LTA070B790F | 1 |
| EP11 | 6910011090 | RMS20-250-201-P | 1 |
| EP12 | 6910011090 | RMS20-250-201-P | 1 |
| EP13 | 0880001460 | EX-2500 #03 SENSOR | 1 |
| EP101 | 6910022560 | SNAP PLATE | 1 |
| EP102 | 6910022560 | SNAP PLATE | 1 |
| MP1 | 8810008971 | BT M2 X3.5 NI-ZC3 | 2 |
| MP2 | 8810009181 | BT M2 X 5 NI-ZC3 | 3 |
| MP3 | 8810009181 | BT M2 X 5 NI-ZC3 | 1 |
| MP4 | 8810009181 | BT M2 X 5 NI-ZC3 | 2 |
| MP5 | 8810005701 | PH M2 X4 ZK3 | 2 |
| MP10 | 8930061450 | 2590 BRAKE BUTTON | 1 |
| MP11 | 8930061470 | 2590 BRAKE PLATE | 1 |
| MP12 | 8930061460 | 2590 BRAKE SPACER | 1 |
| MP13 | 8930060640 | 2590 CF LENS | 1 |
| MP14 | 8110008100 | 2590 CF LENS COVER (TOT)S | 1 |
| MP15 | 8930060651 | 2590 CF PLATE-1 | 1 |
| MP17 | 8930060581 | 2590 EJECT BUTTON-1 | 1 |
| MP19 | 8210019801 | 2590 FRONT PANEL-1 RO | 1 |
| MP20 | 8930060600 | 2590 JACK PLATE | 1 |
| MP21 | 8930060592 | 2590 LCD HOLDER-2 | 1 |
| MP22 | 8930061620 | 2590 LCD SPONGE | 1 |
| MP24 | 8310059640 | 2590 NAME PLATE (GOLD) | 1 |
| MP25 | 8930060690 | 2590 SPRING | 1 |
| MP26 | 8010019311 | 2590 SUB CHASSIS-1 | 1 |
| MP27 | 8930060623 | 2590 VR PLATE-3 | 1 |
| MP29 | 8310059661 | 2590 WINDOW PLATE-1 | 1 |
| MP30 | 8930062190 | DOUBLE SIDE TAPE (AJ) | 2 |
| MP31 | 8930062180 | DOUBLE SIDE TAPE (AK) | 1 |
| MP36 | 8610011391 | KNOB K233-1 | 1 |
| MP41 | 8610011491 | KNOB K-236-1 | 1 |
| MP42 | 8610011501 | KNOB K237-1 | 1 |
| MP43 | 8610011511 | KNOB K237 (A)-1 | 1 |
| MP44 | 8610011521 | KNOB K238-1 | 1 |
| MP45 | 8610011531 | KNOB K239-1 | 1 |
| MP46 | 8610011541 | KNOB K239 (A)-1 | 1 |
| MP47 | 8610011551 | KNOB K240-1 | 1 |
| MP49 | 8610011561 | KNOB K243-1 | 1 |
| MP50 | 8610011421 | KNOB K244-1 | 1 |
| MP51 | 8610011431 | KNOB K245-1 | 1 |
| MP55 | 8610011830 | KNOB N301 | 2 |
| MP58 | 8610011760 | KNOB N303 | 1 |
| MP59 | 8610011770 | KNOB N303 (A) (RED) | 1 |
| MP60 | 8610011780 | KNOB N303 (B) | 2 |
| MP68 | 8610011840 | KNOB N-306 COVER (TOP) | 1 |
| MP70 | 8610011741 | KNOB N307-1 | 7 |
| MP72 | 8610014520 | KNOB N-309 COVER (B) (TOP) | 1 |
| MP75 | 8610011810 | KNOB N310 | 3 |
| MP76 | 8610011820 | KNOB N310 (A) (RED) | 3 |
| MP78 | 8850002010 | PLAIN WASHER (AG) | 1 |
| MP79 | 8930062080 | RUBBER TUBE (C) | 12 |
| MP80 | 8930075510 | RUBBER TUBE (E) | 2 |
| MP81 | 8930061731 | SPONGE (HI)-1 | 2 |
| MP82 | 8810008451 | BIND M4 X 8 ZK3 | 4 |
| MP84 | 8810008761 | PHBT M2 X 8 NI-ZC3 | 10 |
| MP85 | 8810008761 | PHBT M2 X 8 NI-ZC3 | 4 |
| MP86 | 8810008761 | PHBT M2 X 8 NI-ZC3 | 4 |
| MP87 | 8810008761 | PHBT M2 X 8 NI-ZC3 | 2 |
| MP88 | 8810008761 | PHBT M2 X 8 NI-ZC3 | 10 |
| MP90 | 8810008631 | PHBT M3 X 6 NI-ZC3 | 4 |
| MP91 | 8810008631 | PHBT M3 X 6 NI-ZC3 | 4 |
| MP92 | 8810008631 | PHBT M3 X 6 NI-ZC3 | 4 |
| MP93 | 8810008631 | PHBT M3 X 6 NI-ZC3 | 1 |
| MP94 | 8810008631 | PHBT M3 X 6 NI-ZC3 | 2 |
| MP95 | 8810008631 | PHBT M3 X 6 NI-ZC3 | 3 |
| MP99 | 8810009181 | BT M2 X 5 NI-ZC3 | 2 |
| MP100 | 8930062350 | DOUBLE SIDE TAPE (AM) | 1 |
| MP103 | 8930006960 | SPONGE (Y) | 1 |

## [FRONT UNIT]

| REF NO. | ORDER NO. | DESCRIPTION | QTY. |
|---|---|---|---|
| MP104 | 8930019010 | SPONGE (CI) | 1 |
| MP105 | 8930062910 | DOUBLE SIDE TAPE (AO) | 2 |
| MP106 | 8930062170 | DOUBLE SIDE TAPE (AL) | 2 |
| MP107 | 8930072990 | 2844 AL SHEET | 1 |
| MP108 | 8930062950 | SHIELD SPONGE (AF) | 3 |
| MP109 | 8930063270 | 2590 EARTH SPRING Y733 | 1 |
| MP110 | 8930063270 | 2590 EARTH SPRING Y733 | 1 |
| MP111 | 8930017191 | EARTH SPRING (F)-1 | 1 |
| MP112 | 8930063510 | EMBOSS TAPE (L) | 1 |
| MP113 | 8930063500 | EMBOSS TAPE (M) | 1 |
| MP114 | 8930063490 | EMBOSS TAPE (N) | 2 |
| MP115 | 8930063540 | 2590 A-EARTH SPRING | 1 |
| MP116 | 8930063790 | SHIELD SPONGE (AI) | 2 |
| MP117 | 8930063800 | SHIELD SPONGE (AH) | 2 |
| MP118 | 8930063450 | SHIELD SPONGE (AG) | 1 |
| MP119 | 8930061120 | SHIELD SPONGE (AA) | 1 |
| MP120 | 8930063780 | SHIELD SPONGE (AJ) | 1 |

## [VR-A UNIT]

| REF NO. | ORDER NO. | DESCRIPTION | QTY. |
|---|---|---|---|
| J1* | 6510021722 | 30FLT-SM2-TB (LF) (SN) (M) | 1 |
| J2* | 6510018921 | B8B-PH-SM4-TB (LF) (SN) | 1 |
| J3* | 6510019971 | 52808-1071 | 1 |
| J4* | 6510019971 | 52808-1071 | 1 |

## [VR-B BOARD]

| REF NO. | ORDER NO. | DESCRIPTION | QTY. |
|---|---|---|---|
| J1* | 6510019971 | 52808-1071 | 1 |

## [VR-C BOARD]

| REF NO. | ORDER NO. | DESCRIPTION | QTY. |
|---|---|---|---|
| J1* | 6510019971 | 52808-1071 | 1 |

## [VR-D BOARD]

| REF NO. | ORDER NO. | DESCRIPTION | QTY. |
|---|---|---|---|
| J1* | 6510019971 | 52808-1071 | 1 |

## [SW-A BOARD]

| REF NO. | ORDER NO. | DESCRIPTION | QTY. |
|---|---|---|---|
| J1* | 6510019971 | 52808-1071 | 1 |
| J2* | 6510019971 | 52808-1071 | 1 |
| J3* | 6510022472 | 40FLT-SM2-TB (LF) (SN) (M) | 1 |
| S1* | 2260002740 | LS8J2M-T | 1 |
| S2* | 2260002740 | LS8J2M-T | 1 |
| S3* | 2260002740 | LS8J2M-T | 1 |
| S4* | 2260002740 | LS8J2M-T | 1 |
| S5* | 2260002740 | LS8J2M-T | 1 |
| S6* | 2260002740 | LS8J2M-T | 1 |
| S7* | 2260002740 | LS8J2M-T | 1 |
| S8* | 2260002740 | LS8J2M-T | 1 |
| S11* | 2260002740 | LS8J2M-T | 1 |
| S12* | 2260002740 | LS8J2M-T | 1 |
| S13* | 2260002740 | LS8J2M-T | 1 |
| S14* | 2260002740 | LS8J2M-T | 1 |
| S15* | 2260002740 | LS8J2M-T | 1 |
| S16* | 2260002740 | LS8J2M-T | 1 |
| S17* | 2260002740 | LS8J2M-T | 1 |
| S18* | 2260002740 | LS8J2M-T | 1 |
| S19* | 2260002740 | LS8J2M-T | 1 |
| S20* | 2260002740 | LS8J2M-T | 1 |
| S21* | 2260002740 | LS8J2M-T | 1 |
| MP1 | 8930063530 | 2590 B-EARTH SPRING | 1 |

*: Refer to "**BOARD LAYOUTS**" for the location.
**: Refer to "**GENERAL WIRING**" for the connection
**Screw abbreviations** A, B0, BT: Self-tapping PH: Pan head ZK: Black NI-ZU: Nickel-Zinc SUS: Stainless

## [SW-B BOARD]

| REF NO. | ORDER NO. | DESCRIPTION | QTY. |
|---|---|---|---|
| J1* | 6510020531 | 52808-1871 | 1 |
| | | | |
| S1* | 2260002740 | LS8J2M-T | 1 |
| S2* | 2260002740 | LS8J2M-T | 1 |
| S3* | 2260002740 | LS8J2M-T | 1 |
| S4* | 2260002740 | LS8J2M-T | 1 |
| S5* | 2260002740 | LS8J2M-T | 1 |
| S6* | 2260002740 | LS8J2M-T | 1 |
| S7* | 2260002740 | LS8J2M-T | 1 |
| S8* | 2260002740 | LS8J2M-T | 1 |
| S9* | 2260002740 | LS8J2M-T | 1 |
| S10* | 2260002740 | LS8J2M-T | 1 |
| S11* | 2260002740 | LS8J2M-T | 1 |
| S12* | 2260002740 | LS8J2M-T | 1 |
| S13* | 2260002740 | LS8J2M-T | 1 |
| S14* | 2260002740 | LS8J2M-T | 1 |
| S15* | 2260002740 | LS8J2M-T | 1 |
| S16* | 2260002740 | LS8J2M-T | 1 |
| S17* | 2260002740 | LS8J2M-T | 1 |

## [SW-C BOARD]

| REF NO. | ORDER NO. | DESCRIPTION | QTY. |
|---|---|---|---|
| J1* | 6510021722 | 30FLT-SM2-TB (LF) (SN) (M) | 1 |
| J2* | 6510019971 | 52808-1071 | 1 |
| | | | |
| S1* | 2260002740 | LS8J2M-T | 1 |
| S2* | 2260002740 | LS8J2M-T | 1 |
| S3* | 2260002740 | LS8J2M-T | 1 |
| S4* | 2260002740 | LS8J2M-T | 1 |
| S5* | 2260002740 | LS8J2M-T | 1 |
| S6* | 2260002740 | LS8J2M-T | 1 |
| S7* | 2260002740 | LS8J2M-T | 1 |
| S8* | 2260002740 | LS8J2M-T | 1 |
| S9* | 2260002740 | LS8J2M-T | 1 |
| S10* | 2260002740 | LS8J2M-T | 1 |
| S11* | 2260002740 | LS8J2M-T | 1 |
| S12* | 2260002740 | LS8J2M-T | 1 |
| S13* | 2260002740 | LS8J2M-T | 1 |
| S14* | 2260002740 | LS8J2M-T | 1 |
| S15* | 2260002740 | LS8J2M-T | 1 |
| S16* | 2260002740 | LS8J2M-T | 1 |
| S17* | 2260002740 | LS8J2M-T | 1 |
| S18* | 2260002740 | LS8J2M-T | 1 |
| S19* | 2260002740 | LS8J2M-T | 1 |
| S20* | 2260002740 | LS8J2M-T | 1 |
| S21* | 2260002740 | LS8J2M-T | 1 |
| S22* | 2260002740 | LS8J2M-T | 1 |

## [JACK BOARD]

| REF NO. | ORDER NO. | DESCRIPTION | QTY. |
|---|---|---|---|
| J1* | 6510019971 | 52808-1071 | 1 |
| J2* | 6510027890 | 01J0370-00 | 1 |
| J102* | 6510023900 | LGR4619-7000 | 1 |

## [MIC BOARD]

| REF NO. | ORDER NO. | DESCRIPTION | QTY. |
|---|---|---|---|
| J1* | 6510000191 | FM214-8SS (P)-1 | 1 |
| J2* | 6510019971 | 52808-1071 | 1 |

## [DIGISEL BOARD]

| REF NO. | ORDER NO. | DESCRIPTION | QTY. |
|---|---|---|---|
| J1* | 6510021722 | 30FLT-SM2-TB (LF) (SN) (M) | 1 |
| J2* | 6510021722 | 30FLT-SM2-TB (LF) (SN) (M) | 1 |
| J3* | 6510021722 | 30FLT-SM2-TB (LF) (SN) (M) | 1 |
| J4* | 6510019971 | 52808-1071 | 1 |
| J5* | 6510019971 | 52808-1071 | 1 |
| J6 | 6510003401 | B04B-EH-S (LF) (SN) | 1 |
| J7* | 6510018971 | B4B-PH-SM4-TB (LF) (SN) | 1 |
| | | | |
| S1* | 2260002740 | LS8J2M-T | 1 |
| S2* | 2260002740 | LS8J2M-T | 1 |
| S3* | 2260002740 | LS8J2M-T | 1 |
| S4* | 2260002740 | LS8J2M-T | 1 |
| S5* | 2260002740 | LS8J2M-T | 1 |
| S6* | 2260002740 | LS8J2M-T | 1 |
| S7* | 2260002740 | LS8J2M-T | 1 |
| S8* | 2260002740 | LS8J2M-T | 1 |
| S9* | 2260002740 | LS8J2M-T | 1 |
| S11* | 2260002820 | LS9J2M-2D/D-T | 1 |
| S12* | 2260002820 | LS9J2M-2D/D-T | 1 |
| S13* | 2260002820 | LS9J2M-2D/D-T | 1 |
| S14* | 2260002820 | LS9J2M-2D/D-T | 1 |
| S15* | 2260002820 | LS9J2M-2D/D-T | 1 |
| S16* | 2260002820 | LS9J2M-2D/D-T | 1 |
| S17* | 2260002820 | LS9J2M-2D/D-T | 1 |
| S18* | 2260002820 | LS9J2M-2D/D-T | 1 |
| S19* | 2260002820 | LS9J2M-2D/D-T | 1 |
| S20* | 2260002820 | LS9J2M-2D/D-T | 1 |
| S21* | 2260002820 | LS9J2M-2D/D-T | 1 |
| S22* | 2260002820 | LS9J2M-2D/D-T | 1 |
| S23* | 2260002740 | LS8J2M-T | 1 |
| S24* | 2260002740 | LS8J2M-T | 1 |

## [PBT1 UNIT]

| REF NO. | ORDER NO. | DESCRIPTION | QTY. |
|---|---|---|---|
| J1* | 6510019971 | 52808-1071 | 1 |
| | | | |
| S1* | 2250000410 | TP90D96E20-30F-2178-1 | 1 |

## [PBT2 UNIT]

| REF NO. | ORDER NO. | DESCRIPTION | QTY. |
|---|---|---|---|
| J1* | 6510019971 | 52808-1071 | 1 |
| | | | |
| S1* | 2250000410 | TP90D96E20-30F-2178-1 | 1 |

## [LED UNIT]

| REF NO. | ORDER NO. | DESCRIPTION | QTY. |
|---|---|---|---|
| J1* | 6510020711 | 52793-1070 (1090) | 1 |

## [CF UNIT]

| REF NO. | ORDER NO. | DESCRIPTION | QTY. |
|---|---|---|---|
| J1* | 6510024151 | 50FY-BMT-TB (LF) (SN) | 1 |
| J2* | 6510026930 | 31-5620-050-729-871+ | 1 |
| J3* | 6510021601 | S2B-PH-SM4-TB (LF) (SN) | 1 |
| | | | |
| EP2 | 6910015640 | 30-5610-000-002-000+ | 1 |

*: Refer to "**BOARD LAYOUTS**" for the location.
**: Refer to "**GENERAL WIRING**" for the connection
**Screw abbreviations** A, B0, BT: Self-tapping PH: Pan head ZK: Black NI-ZU: Nickel-Zinc SUS: Stainless

## [DISPLAY UNIT]

| REF NO. | ORDER NO. | DESCRIPTION | QTY. |
|---|---|---|---|
| J1* | 6510021722 | 30FLT-SM2-TB (LF) (SN) (M) | 1 |
| J2* | 6510021722 | 30FLT-SM2-TB (LF) (SN) (M) | 1 |
| J3* | 6510022472 | 40FLT-SM2-TB (LF) (SN) (M) | 1 |
| J4* | 6510020531 | 52808-1871 | 1 |
| J5* | 6510019971 | 52808-1071 | 1 |
| J6* | 6510021722 | 30FLT-SM2-TB (LF) (SN) (M) | 1 |
| J7* | 6510019971 | 52808-1071 | 1 |
| J201* | 6510022472 | 40FLT-SM2-TB (LF) (SN) (M) | 1 |
| J202* | 6510022472 | 40FLT-SM2-TB (LF) (SN) (M) | 1 |
| J203* | 6510020081 | 52808-2071 (2090) | 1 |
| J205* | 6510003401 | B04B-EH-S (LF) (SN) | 1 |
| J301* | 6510021181 | SM2 (8.0)B-BHS1TB (LF) (SN) | 1 |
| J302* | 6510022191 | B3B-PH-SM4-TB (LF) (SN) | 1 |
| J601* | 6510021861 | BH-800.4GG <LTC> | 1 |
| T201 | 5910000981 | 3319-T088-LF | 1 |
| BT601 | 3020000110 | CR-2032L/BK | 1 |
| MP1* | 8930063860 | 2590 C-EARTH SPRING Y734 | 1 |
| MP301 | 8510015390 | 2591 REG PLATE | 1 |

## [RXPLL-A BOARD]

| REF NO. | ORDER NO. | DESCRIPTION | QTY. |
|---|---|---|---|
| J2* | 6510019991 | 52808-2271 (2291) | 1 |
| J10* | 6510028210 | SJ050010 (TMP-J01X-V6) | 1 |
| J351* | 6510028210 | SJ050010 (TMP-J01X-V6) | 1 |
| J421* | 6510028210 | SJ050010 (TMP-J01X-V6) | 1 |
| J561* | 6510028210 | SJ050010 (TMP-J01X-V6) | 1 |
| J601* | 6510028210 | SJ050010 (TMP-J01X-V6) | 1 |
| J681* | 6510028210 | SJ050010 (TMP-J01X-V6) | 1 |
| J831* | 6510028210 | SJ050010 (TMP-J01X-V6) | 1 |
| J1001* | 6510028210 | SJ050010 (TMP-J01X-V6) | 1 |
| J1002* | 6510028210 | SJ050010 (TMP-J01X-V6) | 1 |
| J1101* | 6510028210 | SJ050010 (TMP-J01X-V6) | 1 |
| J1201* | 6510028210 | SJ050010 (TMP-J01X-V6) | 1 |
| J1301* | 6510028210 | SJ050010 (TMP-J01X-V6) | 1 |
| J1501* | 6510018961 | B2B-PH-SM4-TB (LF) (SN) | 1 |
| J1701* | 6510019981 | 52808-1671 (1690) | 1 |
| W1052** | 9016201006 | 73/98/025/X98/X98 | 1 |
| W1401** | 9029495075 | 73/98/020/X98/X98 | 1 |
| W1411** | 7120000480 | MJP-0.4-T | 1 |
| MP1 | 8930039710 | RUBBER SHEET (V) | 2 |
| MP101 | 8510010760 | 1876 DDS CASE | 1 |
| MP102 | 8510010770 | 1876 DDS COVER | 1 |
| MP103 | 8510010850 | 1897 D/A CASE | 1 |
| MP151 | 8510013510 | 2355 VCO CASE | 1 |
| MP201 | 8510013510 | 2355 VCO CASE | 1 |
| MP221 | 8510015780 | 2590 VCO CASE Y691 | 1 |
| MP222 | 8510015790 | 2590 VCO COVER Y692 | 1 |
| MP223 | 8810007231 | SET SCREWH M3 X 8 ZC3 | 4 |
| MP224 | 8930062300 | RUBBER SHEET (BI) (SHJ) | 1 |
| MP301 | 8930065741 | 2590 D-EARTH SPRING-1 | 1 |
| MP501 | 8510010760 | 1876 DDS CASE | 1 |
| MP502 | 8510010770 | 1876 DDS COVER | 1 |
| MP503 | 8510010850 | 1897 D/A CASE | 1 |
| MP541 | 8510011970 | 2177 OSC CASE | 1 |
| MP542 | 8510011960 | 2177 OSC COVER | 1 |
| MP548 | 8930025070 | SPONGE (CW) | 1 |
| MP601 | 8930065741 | 2590 D-EARTH SPRING-1 | 1 |
| MP651 | 8510005980 | 724SHIELD CASE | 1 |
| MP652 | 8510005990 | 724SHIELD CASE COVER | 1 |
| MP1058 | 6910001130 | 10MSHIELD CASE (P10L-A) | 1 |
| MP1101 | 8510016060 | 2590 HF CASE Y702 | 1 |
| MP1102 | 8510015910 | 2590 HF COVER Y696 | 1 |
| MP1103 | 8930020860 | IC-HOLDER FX969 | 2 |
| MP1104 | 8930070820 | SHIELD SPONGE (BK) | 1 |
| MP1301 | 8510016050 | 2590 50M CASE | 1 |
| MP1408 | 6910001130 | 10MSHIELD CASE (P10L-A) | 1 |
| MP1501 | 8930065741 | 2590 D-EARTH SPRING-1 | 1 |
| MP1502 | 8930065741 | 2590 D-EARTH SPRING-1 | 1 |
| MP1503 | 8930065741 | 2590 D-EARTH SPRING-1 | 1 |
| MP1504 | 8930065741 | 2590 D-EARTH SPRING-1 | 1 |
| MP1505 | 8510010460 | 1691 MAIN SHIELD PLATE Y295 | 1 |
| MP1651 | 8510016340 | 2590 2MIX CASE Y716 | 1 |
| MP1652 | 8510016390 | 2590 SHIELD PLATE Y722 | 1 |
| MP1653 | 8930024170 | EARTH SPRING (G) Y072 | 1 |

## [RXPLL-B UNIT]

| REF NO. | ORDER NO. | DESCRIPTION | QTY. |
|---|---|---|---|
| J2* | 6510019991 | 52808-2271 (2291) | 1 |
| J10* | 6510028210 | SJ050010 (TMP-J01X-V6) | 1 |
| J351* | 6510028210 | SJ050010 (TMP-J01X-V6) | 1 |
| J561* | 6510028210 | SJ050010 (TMP-J01X-V6) | 1 |
| J601* | 6510028210 | SJ050010 (TMP-J01X-V6) | 1 |
| J681* | 6510028210 | SJ050010 (TMP-J01X-V6) | 1 |
| J831* | 6510028210 | SJ050010 (TMP-J01X-V6) | 1 |
| J1002* | 6510028210 | SJ050010 (TMP-J01X-V6) | 1 |
| J1101* | 6510028210 | SJ050010 (TMP-J01X-V6) | 1 |
| J1201* | 6510028210 | SJ050010 (TMP-J01X-V6) | 1 |
| J1301* | 6510028210 | SJ050010 (TMP-J01X-V6) | 1 |
| J1501* | 6510018961 | B2B-PH-SM4-TB (LF) (SN) | 1 |
| J1701* | 6510019981 | 52808-1671 (1690) | 1 |
| W1052** | 9016201006 | 73/98/025/X98/X98 | 1 |
| W1401** | 9029495075 | 73/98/020/X98/X98 | 1 |
| W1411** | 7120000480 | MJP-0.4-T | 1 |
| MP1 | 8930039710 | RUBBER SHEET (V) | 2 |
| MP101 | 8510010760 | 1876 DDS CASE | 1 |
| MP102 | 8510010770 | 1876 DDS COVER | 1 |
| MP103 | 8510010850 | 1897 D/A CASE | 1 |
| MP151 | 8510013510 | 2355 VCO CASE | 1 |
| MP201 | 8510013510 | 2355 VCO CASE | 1 |
| MP221 | 8510015780 | 2590 VCO CASE Y691 | 1 |
| MP222 | 8510015790 | 2590 VCO COVER Y692 | 1 |
| MP223 | 8810007231 | SET SCREWH M3 X 8 ZC3 | 4 |
| MP224 | 8930062300 | RUBBER SHEET (BI) (SHJ) | 1 |
| MP301 | 8930065741 | 2590 D-EARTH SPRING-1 | 1 |
| MP501 | 8510010760 | 1876 DDS CASE | 1 |
| MP502 | 8510010770 | 1876 DDS COVER | 1 |
| MP503 | 8510010850 | 1897 D/A CASE | 1 |
| MP541 | 8510011970 | 2177 OSC CASE | 1 |
| MP542 | 8510011960 | 2177 OSC COVER | 1 |
| MP543 | 8510005070 | 599SHIELD PLATE | 1 |
| MP544 | 8930030940 | ENBOSS TAPE (D) | 1 |
| MP545 | 8930030940 | ENBOSS TAPE (D) | 1 |
| MP546 | 8930027810 | ENBOSS TAPE (B) | 1 |
| MP547 | 8930025070 | SPONGE (CW) | 1 |
| MP548 | 8930030940 | ENBOSS TAPE (D) | 1 |
| MP549 | 8930030940 | ENBOSS TAPE (D) | 1 |
| MP601 | 8930065741 | 2590 D-EARTH SPRING-1 | 1 |
| MP651 | 8510005980 | 724SHIELD CASE | 1 |
| MP652 | 8510005990 | 724SHIELD CASE COVER | 1 |
| MP1058 | 6910001130 | 10MSHIELD CASE (P10L-A) | 1 |
| MP1101 | 8510016060 | 2590 HF CASE Y702 | 1 |
| MP1102 | 8510015910 | 2590 HF COVER Y696 | 1 |
| MP1103 | 8930020860 | IC-HOLDER FX969 | 2 |
| MP1104 | 8930070820 | SHIELD SPONGE (BK) | 1 |
| MP1301 | 8510016050 | 2590 50M CASE | 1 |
| MP1408 | 6910001130 | 10MSHIELD CASE (P10L-A) | 1 |
| MP1501 | 8930065741 | 2590 D-EARTH SPRING-1 | 1 |
| MP1502 | 8930065741 | 2590 D-EARTH SPRING-1 | 1 |
| MP1503 | 8930065741 | 2590 D-EARTH SPRING-1 | 1 |
| MP1504 | 8930065741 | 2590 D-EARTH SPRING-1 | 1 |
| MP1505 | 8510010460 | 1691 MAIN SHIELD PLATE Y295 | 1 |
| MP1651 | 8510016340 | 2590 2MIX CASE Y716 | 1 |
| MP1652 | 8510016390 | 2590 SHIELD PLATE Y722 | 1 |
| MP1653 | 8930024170 | EARTH SPRING (G) Y072 | 1 |
| W506 | 8970024500 | 0.8DCOAXIAL130MM W13A/W13A | 1 |
| J1* | 6510020520 | 52808-1291 [USA] | 1 |
| | 6510020521 | 52808-1271 (1290) [EUR] | 1 |
| | 6510020521 | 52808-1271 (1290) [FRA] | 1 |
| | 6510020521 | 52808-1271 (1290) [ITR] | 1 |
| | 6510020521 | 52808-1271 (1290) [UK] | 1 |
| | 6510020521 | 52808-1271 (1290) [RX] | 1 |
| J101* | 6510028210 | SJ050010 (TMP-J01X-V6) | 1 |
| J102* | 6510028210 | SJ050010 (TMP-J01X-V6) | 1 |
| J103* | 6510023751 | 01K1971-20 | 1 |
| J104* | 6510023751 | 01K1971-20 | 1 |
| J105* | 6510023751 | 01K1971-20 | 1 |
| J106* | 6510028210 | SJ050010 (TMP-J01X-V6) | 1 |
| J107* | 6510028210 | SJ050010 (TMP-J01X-V6) | 1 |
| J108* | 6510028210 | SJ050010 (TMP-J01X-V6) | 1 |
| J504* | 6510023751 | 01K1971-20 | 1 |
| J505* | 6510023751 | 01K1971-20 | 1 |
| J506* | 6510028210 | SJ050010 (TMP-J01X-V6) | 1 |
| J601* | 6510028210 | SJ050010 (TMP-J01X-V6) | 1 |
| J602* | 6510028210 | SJ050010 (TMP-J01X-V6) | 1 |

*: Refer to "**BOARD LAYOUTS**" for the location.
**: Refer to "**GENERAL WIRING**" for the connection
**Screw abbreviations** A, B0, BT: Self-tapping PH: Pan head ZK: Black NI-ZU: Nickel-Zinc SUS: Stainless

## [MAIN UNIT]

| REF NO. | ORDER NO. | DESCRIPTION | QTY. |
|---|---|---|---|
| J1* | 6510023671 | TCS4480-0141577 | 1 |
| J2* | 6510023661 | TCS4470-0141577 | 1 |
| J3* | 6510023671 | TCS4480-0141577 | 1 |
| J4* | 6510023661 | TCS4470-0141577 | 1 |
| J5* | 6450001130 | JPJ2042-01-110 | 1 |
| J6* | 6510023730 | LGY6502-0600C | 1 |
| J7* | 6510023730 | LGY6502-0600C | 1 |
| J8* | 6510023740 | LGR4609-7000 | 1 |
| J9* | 6510024940 | HEC2305-016250 | 1 |
| J140* | 6510023720 | LGY6501-0600C | 1 |
| J141* | 6510023720 | LGY6501-0600C | 1 |
| J142* | 6510018961 | B2B-PH-SM4-TB (LF) (SN) | 1 |
| J340* | 6510022811 | IMSA-9180B-22B-PT1 | 1 |
| J341* | 6510021651 | IMSA-9180B-30B-PT1 | 1 |
| J360* | 6510022811 | IMSA-9180B-22B-PT1 | 1 |
| J361* | 6510021651 | IMSA-9180B-30B-PT1 | 1 |
| J380* | 6510022811 | IMSA-9180B-22B-PT1 | 1 |
| J381* | 6510021651 | IMSA-9180B-30B-PT1 | 1 |
| J399* | 6510028210 | SJ050010 (TMP-J01X-V6) | 1 |
| J400* | 6510019981 | 52808-1671 (1690) | 1 |
| J401* | 6510022191 | B3B-PH-SM4-TB (LF) (SN) | 1 |
| J403* | 6510019981 | 52808-1671 (1690) | 1 |
| J404* | 6510022191 | B3B-PH-SM4-TB (LF) (SN) | 1 |
| J410* | 6510020001 | 52808-3071 (3090) | 1 |
| J411* | 6510019971 | 52808-1071 | 1 |
| J430* | 6510022311 | B5B-PH-SM4-TB (LF) (SN) | 1 |
| J440* | 6510018921 | B8B-PH-SM4-TB (LF) (SN) | 1 |
| J450 | 6510003471 | B11B-EH-S (LF) (SN) | 1 |
| J451* | 6510018941 | B13B-PH-SM4-TB (LF) (SN) | 1 |
| J490 | 6510023751 | 01K1971-20 | 1 |
| J491* | 6510028210 | SJ050010 (TMP-J01X-V6) | 1 |
| J492* | 6510014961 | B2B-ZR-SM4-TF (LF) (SN) | 1 |
| J495* | 6510026830 | TORX177PL (FTJ) | 1 |
| J496* | 6510028140 | TOTX177APL (FTJ) | 1 |
| J501* | 6510028210 | SJ050010 (TMP-J01X-V6) | 1 |
| J502* | 6510028210 | SJ050010 (TMP-J01X-V6) | 1 |
| J503* | 6510028210 | SJ050010 (TMP-J01X-V6) | 1 |
| J801* | 6510028210 | SJ050010 (TMP-J01X-V6) | 1 |
| J802* | 6510028210 | SJ050010 (TMP-J01X-V6) | 1 |
| J808* | 6510028210 | SJ050010 (TMP-J01X-V6) | 1 |
| J900* | 6510022472 | 40FLT-SM2-TB (LF) (SN) (M) | 1 |
| J901* | 6510015541 | B4B-ZR-SM4-TF (LF) (SN) | 1 |
| J940* | 6510022472 | 40FLT-SM2-TB (LF) (SN) (M) | 1 |
| F1 | 5220000230 | S-N5054 #01 | 1 |
| F2 | 5220000230 | S-N5054 #01 | 1 |
| F3 | 5210000041 | FGB 2A PBF (FGB0 125V) | 1 |
| W1** | 9024801019 | 74/98/020/X98/X98 | 1 |
| EP501 | 9088000010 | IRRAX D=1.5 L=12MM | 1 |
| MP496 | 8930077910 | 2590 M2-SPRING | 1 |
| MP501 | 8930014140 | EARTH SPRING (D) | 1 |
| MP502 | 8510015800 | 2590 2LO CASE Y690 | 1 |
| MP503 | 8510000180 | 117SHIELD PLATE | 1 |
| MP511 | 8510015900 | 2590 M-2LO CASE Y697 | 1 |
| MP551 | 8930014140 | EARTH SPRING (D) | 1 |
| MP801 | 8930014140 | EARTH SPRING (D) | 1 |

## [DSP-A UNIT]

| REF NO. | ORDER NO. | DESCRIPTION | QTY. |
|---|---|---|---|
| J921* | 6910013900 | IMSA-9180S-22A | 1 |
| J961* | 6910012460 | IMSA-9180S-30A | 1 |
| MP1 | 8510014140 | 2432 DSP COVER | 1 |
| MP2 | 8510016110 | 2590 M-DSP CASE | 1 |
| MP3 | 8930062220 | THERMAL SHEET (AO)TC-200HS-1.4 (29X48 | 1 |
| MP4 | 8930055051 | THERMAL SHEET (V)-1 TC400HS (10X15) | 2 |

## [DSP-B UNIT]

| REF NO. | ORDER NO. | DESCRIPTION | QTY. |
|---|---|---|---|
| J921* | 6910013900 | IMSA-9180S-22A | 1 |
| J961* | 6910012460 | IMSA-9180S-30A | 1 |
| MP1 | 8510014140 | 2432 DSP COVER | 1 |
| MP2 | 8510016110 | 2590 M-DSP CASE | 1 |
| MP3 | 8930062220 | THERMAL SHEET (AO)TC-200HS-1.4 (29X48 | 1 |
| MP4 | 8930055051 | THERMAL SHEET (V)-1 TC400HS (10X15) | 2 |

## [DPS-TX UNIT]

| REF NO. | ORDER NO. | DESCRIPTION | | QTY. |
|---|---|---|---|---|
| J921* | 6910013900 | IMSA-9180S-22A | [USA] | 1 |
| | 6910013900 | IMSA-9180S-22A | [EUR] | 1 |
| | 6910013900 | IMSA-9180S-22A | [FRA] | 1 |
| | 6910013900 | IMSA-9180S-22A | [ITR] | 1 |
| | 6910013900 | IMSA-9180S-22A | [UK] | 1 |
| J961* | 6910012460 | IMSA-9180S-30A | [USA] | 1 |
| | 6910012460 | IMSA-9180S-30A | [EUR] | 1 |
| | 6910012460 | IMSA-9180S-30A | [FRA] | 1 |
| | 6910012460 | IMSA-9180S-30A | [ITR] | 1 |
| | 6910012460 | IMSA-9180S-30A | [UK] | 1 |
| MP1 | 8510014140 | 2432 DSP COVER | [USA] | 1 |
| | 8510014140 | 2432 DSP COVER | [EUR] | 1 |
| | 8510014140 | 2432 DSP COVER | [FRA] | 1 |
| | 8510014140 | 2432 DSP COVER | [ITR] | 1 |
| | 8510014140 | 2432 DSP COVER | [UK] | 1 |
| MP2 | 8510016110 | 2590 M-DSP CASE | [USA] | 1 |
| | 8510016110 | 2590 M-DSP CASE | [EUR] | 1 |
| | 8510016110 | 2590 M-DSP CASE | [FRA] | 1 |
| | 8510016110 | 2590 M-DSP CASE | [ITR] | 1 |
| | 8510016110 | 2590 M-DSP CASE | [UK] | 1 |
| MP3 | 8930062220 | THERMAL SHEET (AO)TC-200HS-1.4 (29X48 | [USA] | 1 |
| | 8930062220 | THERMAL SHEET (AO)TC-200HS-1.4 (29X48 | [EUR] | 1 |
| | 8930062220 | THERMAL SHEET (AO)TC-200HS-1.4 (29X48 | [FRA] | 1 |
| | 8930062220 | THERMAL SHEET (AO)TC-200HS-1.4 (29X48 | [ITR] | 1 |
| | 8930062220 | THERMAL SHEET (AO)TC-200HS-1.4 (29X48 | [UK] | 1 |
| MP4 | 8930055051 | THERMAL SHEET (V)-1 TC400HS (10X15) | [USA] | 2 |
| | 8930055051 | THERMAL SHEET (V)-1 TC400HS (10X15) | [EUR] | 2 |
| | 8930055051 | THERMAL SHEET (V)-1 TC400HS (10X15) | [FRA] | 2 |
| | 8930055051 | THERMAL SHEET (V)-1 TC400HS (10X15) | [ITR] | 2 |
| | 8930055051 | THERMAL SHEET (V)-1 TC400HS (10X15) | [UK] | 2 |

## [SCOPE UNIT]

| REF NO. | ORDER NO. | DESCRIPTION | QTY. |
|---|---|---|---|
| J1* | 6510028210 | SJ050010 (TMP-J01X-V6) | 1 |
| J2* | 6510028210 | SJ050010 (TMP-J01X-V6) | 1 |
| J3* | 6510028210 | SJ050010 (TMP-J01X-V6) | 1 |
| J4* | 6510020001 | 52808-3071 (3090) | 1 |
| J11* | 6510028210 | SJ050010 (TMP-J01X-V6) | 1 |
| J901* | 6510023720 | LGY6501-0600C | 1 |
| J902* | 6510023120 | CD6109SA1J0 <CVI> | 1 |
| J903* | 6510024040 | TM11R-5M2-88-LP | 1 |
| J904* | 6510024033 | UBA-4R-D14T-4D (LF) (SN) | 1 |
| J905* | 6450001941 | KEY-15S-2A3A (LF) (SN) | 1 |
| J906* | 6510019971 | 52808-1071 | 1 |
| J907* | 6510020251 | B9B-PH-SM4-TB (LF) (SN) | 1 |
| J908* | 6510022311 | B5B-PH-SM4-TB (LF) (SN) | 1 |
| J909* | 6510003471 | B11B-EH-S (LF) (SN) | 1 |
| J910* | 6510019421 | B8B-ZR-SM4-TF (LF) (SN) | 1 |
| MP3 | 8930014140 | EARTH SPRING (D) | 1 |
| MP101 | 8510015810 | 2590 MIX CASE Y693 | 1 |
| MP301 | 8510015810 | 2590 MIX CASE Y693 | 1 |
| MP601 | 8510015770 | 2590 DSP CASE Y688 | 1 |
| MP701 | 8510015880 | 2590 S2LO CASE Y694 | 1 |
| MP801 | 8510015891 | 2590 S3LO CASE-1 Y695A | 1 |
| MP802 | 8510014870 | 2577 RX-VCO CASE | 1 |
| MP901 | 8850001860 | FLAT WASHER M3 (3X6X0.5) SUS | 2 |
| MP902 | 8850000420 | S-WASHER M 3 NI | 2 |

*: Refer to "**BOARD LAYOUTS**" for the location.
**: Refer to "**GENERAL WIRING**" for the connection
**Screw abbreviations** A, B0, BT: Self-tapping PH: Pan head ZK: Black NI-ZU: Nickel-Zinc SUS: Stainless

## [LOGIC UNIT]

| REF NO. | ORDER NO. | DESCRIPTION | QTY. |
|---|---|---|---|
| J1* | 6510022491 | AXK5S30047YG | 1 |
| J2* | 6510019871 | AXK5S40047YG | 1 |
| J51* | 6910014251 | IMSA-9202B-2-06Z041-PT1 | 1 |
| J102* | 6510019981 | 52808-1671 (1690) | 1 |
| J602* | 6510019971 | 52808-1071 | 1 |
| J604* | 6510019971 | 52808-1071 | 1 |
| J802* | 6510024261 | S9B-PH-SM4-TB (LF) (SN) | 1 |
| J803* | 6510024401 | S11B-EH (LF) (SN) | 1 |
| J804* | 6510024251 | S5B-PH-SM4-TB (LF) (SN) | 1 |
| J805* | 6510024111 | 52793-2070 (2090) | 1 |
| J806* | 6510024131 | IMSA-9637S-40Y905 | 1 |
| J807* | 6510024151 | 50FY-BMT-TB (LF) (SN) | 1 |
| J808* | 6510022472 | 40FLT-SM2-TB (LF) (SN) (M) | 1 |
| J809* | 6510022472 | 40FLT-SM2-TB (LF) (SN) (M) | 1 |
| J810* | 6510022731 | S13B-PH-SM4-TB (LF) (SN) | 1 |
| J811* | 6510021561 | 52808-2470 (2490) | 1 |
| J812* | 6510020701 | 52793-1270 (1290) | 1 |
| J813* | 6510020081 | 52808-2071 (2090) | 1 |
| J814* | 6510019971 | 52808-1071 | 1 |
| J815* | 6510019991 | 52808-2271 (2291) | 1 |
| J816* | 6510019991 | 52808-2271 (2291) | 1 |
| J820* | 6510003581 | S10B-EH-S (LF) (SN) | 1 |
| J821* | 6510003551 | S07B-EH-S (LF) (SN) | 1 |
| J822* | 6510021601 | S2B-PH-SM4-TB (LF) (SN) | 1 |
| J823* | 6510021601 | S2B-PH-SM4-TB (LF) (SN) | 1 |
| J824* | 6510024100 | SC25-02WL | 1 |
| J825* | 6510019421 | B8B-ZR-SM4-TF (LF) (SN) | 1 |
| J826* | 6510023801 | S4B-ZR-SM4A-TF (LF) (SN) | 1 |
| S51* | 2260001890 | SKQDPA | 1 |
| T401* | 5920000841 | H1102NL <QUA> | 1 |
| MP101 | 8510016490 | 2590 LOGIC B-PLATE Y731 | 1 |
| MP103 | 8930063300 | AL SHEET (AK) | 1 |
| MP201 | 8510016480 | 2590 LOGIC C-PLATE Y732 | 1 |
| MP203 | 8510016500 | 2590 LOGIC A-PLATE Y730 | 1 |
| MP204 | 8930063320 | 2590 A-SHEET | 1 |
| MP205 | 8930063310 | 2590 B-SHEET | 1 |
| MP801 | 8510005351 | 637 VCO SHIELD PLATE-1 | 1 |

## [PA UNIT]

| REF NO. | ORDER NO. | DESCRIPTION | | QTY. |
|---|---|---|---|---|
| MF1 | 2710000770 | FCB34AC12A | | 1 |
| W1** | 8900012790 | OPC-1299 | [USA] | 1 |
| | 8900012790 | OPC-1299 | [EUR] | 1 |
| | 8900012790 | OPC-1299 | [FRA] | 1 |
| | 8900012790 | OPC-1299 | [ITR] | 1 |
| | 8900012790 | OPC-1299 | [UK] | 1 |
| MP1 | 8820000701 | 1129 SCREW-1 | | 4 |
| MP3 | 8930061230 | 2590 FL-PA ANGLE | | 1 |
| MP4 | 8930061240 | 2590 FR-PA ANGLE | | 1 |
| MP5 | 8930061260 | 2590 L-FAN ANGLE | | 1 |
| MP6 | 8510015991 | 2590 PA COVER-1 | [USA] | 1 |
| | 8510015991 | 2590 PA COVER-1 | [EUR] | 1 |
| | 8510015991 | 2590 PA COVER-1 | [FRA] | 1 |
| | 8510015991 | 2590 PA COVER-1 | [ITR] | 1 |
| | 8510015991 | 2590 PA COVER-1 | [UK] | 1 |
| MP7 | 8410002550 | 2590 PA HEATSINK | | 1 |
| MP8 | 8930062121 | 2590 PA SHEET-1 | [USA] | 1 |
| | 8930062121 | 2590 PA SHEET-1 | [EUR] | 1 |
| | 8930062121 | 2590 PA SHEET-1 | [FRA] | 1 |
| | 8930062121 | 2590 PA SHEET-1 | [ITR] | 1 |
| | 8930062121 | 2590 PA SHEET-1 | [UK] | 1 |
| MP9 | 8930061250 | 2590 R-FAN ANGLE | | 1 |
| MP10 | 8930061221 | 2590 R-PA ANGLE-1 | | 1 |
| MP11 | 8930061430 | 2590 RUBBER (TOT)S | | 4 |
| MP12 | 8930062210 | THERMAL SHEET (AL)TC-300HS-1.4 (21.5X | [USA] | 1 |
| | 8930062210 | THERMAL SHEET (AL)TC-300HS-1.4 (21.5X | [EUR] | 1 |
| | 8930062210 | THERMAL SHEET (AL)TC-300HS-1.4 (21.5X | [FRA] | 1 |
| | 8930062210 | THERMAL SHEET (AL)TC-300HS-1.4 (21.5X | [ITR] | 1 |
| | 8930062210 | THERMAL SHEET (AL)TC-300HS-1.4 (21.5X | [UK] | 1 |
| MP13 | 8810009040 | SET SCREWH M2.6X10 NI | [USA] | 6 |
| | 8810009040 | SET SCREWH M2.6X10 NI | [EUR] | 6 |
| | 8810009040 | SET SCREWH M2.6X10 NI | [FRA] | 6 |
| | 8810009040 | SET SCREWH M2.6X10 NI | [ITR] | 6 |
| | 8810009040 | SET SCREWH M2.6X10 NI | [UK] | 6 |
| MP14 | 8810007231 | SET SCREWH M3 X 8 ZC3 | [USA] | 10 |
| | 8810007231 | SET SCREWH M3 X 8 ZC3 | [EUR] | 10 |
| | 8810007231 | SET SCREWH M3 X 8 ZC3 | [FRA] | 10 |
| | 8810007231 | SET SCREWH M3 X 8 ZC3 | [ITR] | 10 |
| | 8810007231 | SET SCREWH M3 X 8 ZC3 | [UK] | 10 |
| MP15 | 8810008661 | PHBT M3 X 8 NI-ZC3 | | 8 |
| MP16 | 8810008661 | PHBT M3 X 8 NI-ZC3 | [USA] | 5 |
| | 8810008661 | PHBT M3 X 8 NI-ZC3 | [EUR] | 5 |
| | 8810008661 | PHBT M3 X 8 NI-ZC3 | [FRA] | 5 |
| | 8810008661 | PHBT M3 X 8 NI-ZC3 | [ITR] | 5 |
| | 8810008661 | PHBT M3 X 8 NI-ZC3 | [UK] | 5 |
| MP17 | 8810008661 | PHBT M3 X 8 NI-ZC3 | | 1 |
| MP18 | 8810008661 | PHBT M3 X 8 NI-ZC3 | | 1 |
| MP19 | 6910008240 | 59TN4772 | | 1 |
| MP20 | 8930063150 | THERMAL SHEET (AR) TC300HS-1.4 (14.5X | [USA] | 2 |
| | 8930063150 | THERMAL SHEET (AR) TC300HS-1.4 (14.5X | [EUR] | 2 |
| | 8930063150 | THERMAL SHEET (AR) TC300HS-1.4 (14.5X | [FRA] | 2 |
| | 8930063150 | THERMAL SHEET (AR) TC300HS-1.4 (14.5X | [ITR] | 2 |
| | 8930063150 | THERMAL SHEET (AR) TC300HS-1.4 (14.5X | [UK] | 2 |

*: Refer to "**BOARD LAYOUTS**" for the location.
**: Refer to "**GENERAL WIRING**" for the connection
**Screw abbreviations** A, B0, BT: Self-tapping PH: Pan head ZK: Black NI-ZU: Nickel-Zinc SUS: Stainless

## [PA200W UNIT]

| REF NO. | ORDER NO. | DESCRIPTION | | QTY. |
|---|---|---|---|---|
| J1* | 6510028210 | SJ050010 (TMP-J01X-V6) | [USA] | 1 |
| | 6510028210 | SJ050010 (TMP-J01X-V6) | [EUR] | 1 |
| | 6510028210 | SJ050010 (TMP-J01X-V6) | [FRA] | 1 |
| | 6510028210 | SJ050010 (TMP-J01X-V6) | [ITR] | 1 |
| | 6510028210 | SJ050010 (TMP-J01X-V6) | [UK] | 1 |
| J2* | 6510022311 | B5B-PH-SM4-TB (LF) (SN) | [USA] | 1 |
| | 6510022311 | B5B-PH-SM4-TB (LF) (SN) | [EUR] | 1 |
| | 6510022311 | B5B-PH-SM4-TB (LF) (SN) | [FRA] | 1 |
| | 6510022311 | B5B-PH-SM4-TB (LF) (SN) | [ITR] | 1 |
| | 6510022311 | B5B-PH-SM4-TB (LF) (SN) | [UK] | 1 |
| J5* | 6510020421 | S4B-PH-SM4-TB (LF) (SN) | [USA] | 1 |
| | 6510020421 | S4B-PH-SM4-TB (LF) (SN) | [EUR] | 1 |
| | 6510020421 | S4B-PH-SM4-TB (LF) (SN) | [FRA] | 1 |
| | 6510020421 | S4B-PH-SM4-TB (LF) (SN) | [ITR] | 1 |
| | 6510020421 | S4B-PH-SM4-TB (LF) (SN) | [UK] | 1 |
| J401* | 6510017920 | 1811P342 | [USA] | 1 |
| | 6510017920 | 1811P342 | [EUR] | 1 |
| | 6510017920 | 1811P342 | [FRA] | 1 |
| | 6510017920 | 1811P342 | [ITR] | 1 |
| | 6510017920 | 1811P342 | [UK] | 1 |
| J402* | 6910001040 | IPS-1136 | [USA] | 1 |
| | 6910001040 | IPS-1136 | [EUR] | 1 |
| | 6910001040 | IPS-1136 | [FRA] | 1 |
| | 6910001040 | IPS-1136 | [ITR] | 1 |
| | 6910001040 | IPS-1136 | [UK] | 1 |
| W401** | 9025900670 | 23/05/060/B21/W07 | [USA] | 1 |
| | 9025900670 | 23/05/060/B21/W07 | [EUR] | 1 |
| | 9025900670 | 23/05/060/B21/W07 | [FRA] | 1 |
| | 9025900670 | 23/05/060/B21/W07 | [ITR] | 1 |
| | 9025900670 | 23/05/060/B21/W07 | [UK] | 1 |
| W501** | 9040401001 | 74/98/050/X98/X98 | [USA] | 1 |
| | 9040401001 | 74/98/050/X98/X98 | [EUR] | 1 |
| | 9040401001 | 74/98/050/X98/X98 | [FRA] | 1 |
| | 9040401001 | 74/98/050/X98/X98 | [ITR] | 1 |
| | 9040401001 | 74/98/050/X98/X98 | [UK] | 1 |
| EP501 | 6910011330 | OT-009 M3 | [USA] | 1 |
| | 6910011330 | OT-009 M3 | [EUR] | 1 |
| | 6910011330 | OT-009 M3 | [FRA] | 1 |
| | 6910011330 | OT-009 M3 | [ITR] | 1 |
| | 6910011330 | OT-009 M3 | [UK] | 1 |
| EP502 | 6910011330 | OT-009 M3 | [USA] | 1 |
| | 6910011330 | OT-009 M3 | [EUR] | 1 |
| | 6910011330 | OT-009 M3 | [FRA] | 1 |
| | 6910011330 | OT-009 M3 | [ITR] | 1 |
| | 6910011330 | OT-009 M3 | [UK] | 1 |
| EP503 | 6910000640 | FSRH090160RN000B (FSOH090RN) | [USA] | 1 |
| | 6910000640 | FSRH090160RN000B (FSOH090RN) | [EUR] | 1 |
| | 6910000640 | FSRH090160RN000B (FSOH090RN) | [FRA] | 1 |
| | 6910000640 | FSRH090160RN000B (FSOH090RN) | [ITR] | 1 |
| | 6910000640 | FSRH090160RN000B (FSOH090RN) | [UK] | 1 |

## [DC-DC UNIT]

| REF NO. | ORDER NO. | DESCRIPTION | QTY. |
|---|---|---|---|
| J2* | 6510003471 | B11B-EH-S (LF) (SN) | 1 |
| J3* | 6510003431 | B07B-EH-S (LF) (SN) | 1 |
| J4* | 6510003461 | B10B-EH-S (LF) (SN) | 1 |
| J5* | 6510020421 | S4B-PH-SM4-TB (LF) (SN) | 1 |
| W1** | 8900012780 | OPC-1298 | 1 |
| MP21 | 8510015720 | 2590 DC-DC A-CASE Y685 | 1 |
| MP22 | 8510015730 | 2590 DC-DC A-PLATE Y686 | 1 |
| MP41 | 8510015720 | 2590 DC-DC A-CASE Y685 | 1 |
| MP42 | 8510015730 | 2590 DC-DC A-PLATE Y686 | 1 |
| MP61 | 8510015720 | 2590 DC-DC A-CASE Y685 | 1 |
| MP62 | 8510015730 | 2590 DC-DC A-PLATE Y686 | 1 |
| MP81 | 8510015720 | 2590 DC-DC A-CASE Y685 | 1 |
| MP82 | 8510015730 | 2590 DC-DC A-PLATE Y686 | 1 |
| MP101 | 8510015720 | 2590 DC-DC A-CASE Y685 | 1 |
| MP102 | 8510015730 | 2590 DC-DC A-PLATE Y686 | 1 |
| MP121 | 8510015740 | 2590 DC-DC B-CASE Y687 | 1 |
| MP122 | 8510015750 | 2590 DC-DC B-PLATE Y689 | 1 |

## [TUNER UNIT]

| REF NO. | ORDER NO. | DESCRIPTION | QTY. |
|---|---|---|---|
| MF1 | 2710000780 | MP24Z | 1 |
| MF2 | 2710000780 | MP24Z | 1 |
| MF3 | 2710000890 | U60R12MHAB-51 | 1 |
| W1** | 8900012901 | OPC-1345R | 1 |
| W2** | 8900012901 | OPC-1345R | 1 |
| W3** | 8900017140 | OPC-927A (P1N24L100) | 1 |
| W51** | 8600037090 | SX2590 P51*P52*P53TU | 1 |
| MP1 | 8950003200 | UJ6-5 | 2 |
| MP2 | 8930030112 | 1414 PLATE-2 Y2013B | 2 |
| MP3 | 8820000881 | 1528 SCREW-1 | 4 |
| MP4 | 8930061271 | 2590 MOTOR ANGLE-1 | 1 |
| MP5 | 8510015832 | 2590 TUNER CASE-2 | 1 |
| MP6 | 8510015870 | 2590 TUNER COVER | 1 |
| MP7 | 8810005161 | CAPBOLT M3 X20 ZK3BLACK | 4 |
| MP8 | 8810007231 | SET SCREWH M3 X 8 ZC3 | 6 |
| MP9 | 8810007231 | SET SCREWH M3 X 8 ZC3 | 4 |
| MP10 | 8810008631 | PHBT M3 X 6 NI-ZC3 | 6 |
| MP11 | 8810008631 | PHBT M3 X 6 NI-ZC3 | 6 |
| MP12 | 8810008631 | PHBT M3 X 6 NI-ZC3 | 4 |
| MP13 | 8850000130 | FLAT WASHER M3 (3X8X0.5)NI BS | 4 |
| MP14 | 8930006960 | SPONGE (Y) | 1 |
| MP15 | 8930059520 | NONWOVENS SHEET (CG) | 1 |
| MP16 | 8930058760 | SHIELD SPONGE (S) | 1 |
| MP18 | 8930042400 | SPACER (AC) | 4 |

## [CTRL UNIT]

| REF NO. | ORDER NO. | DESCRIPTION | QTY. |
|---|---|---|---|
| J1* | 6510023771 | 52793-2470 (2490) | 1 |
| J2* | 6510023761 | S10B-PH-SM4-TB (LF) (SN) | 1 |
| J51* | 6510023771 | 52793-2470 (2490) | 1 |
| J52* | 6510022031 | B10B-ZR-SM4-TF (LF) (SN) | 1 |
| J53* | 6510021431 | S8B-ZR-SM4A-TF (LF) (SN) | 1 |
| J101* | 6510017920 | 1811P342 | 1 |
| J251* | 6510017920 | 1811P342 | 1 |
| J252* | 6510017920 | 1811P342 | 1 |
| J301* | 6510017920 | 1811P342 | 1 |
| J351* | 6510028210 | SJ050010 (TMP-J01X-V6) | 1 |
| W1 | 9029804001 | 72/99/040/X98/X98 | 1 |
| EP1 | 9040902903 | IRRAX D=0.7 L=22MM | 1 |
| MP1 | 8510015760 | 2590 A-CTRL CASE Y684 | 1 |
| MP2 | 8930014140 | EARTH SPRING (D) | 1 |

## [ANT-SW UNIT]

| REF NO. | ORDER NO. | DESCRIPTION | QTY. |
|---|---|---|---|
| J1* | 6510017930 | 1771P145-20 | 1 |
| J2* | 6510028210 | SJ050010 (TMP-J01X-V6) | 1 |
| J3* | 6510028210 | SJ050010 (TMP-J01X-V6) | 1 |
| J4* | 6510019971 | 52808-1071 | 1 |
| J51* | 6510000410 | MR-DS-E 02 <SSC> | 1 |
| J61* | 6510000410 | MR-DS-E 02 <SSC> | 1 |
| J71* | 6510000410 | MR-DS-E 02 <SSC> | 1 |
| J81* | 6510000410 | MR-DS-E 02 <SSC> | 1 |

## [OSC UNIT]

| REF NO. | ORDER NO. | DESCRIPTION | QTY. |
|---|---|---|---|
| J2* | 6510019971 | 52808-1071 | 1 |
| J71* | 6510028210 | SJ050010 (TMP-J01X-V6) | 1 |
| J72* | 6510028210 | SJ050010 (TMP-J01X-V6) | 1 |
| J73* | 6510028210 | SJ050010 (TMP-J01X-V6) | 1 |
| MP1 | 8510015822 | 2590 OSC CASE-2 | 1 |
| MP2 | 8110008050 | 2590 OSC COVER | 1 |
| MP3 | 8810008631 | PHBT M3 X 6 NI-ZC3 | 4 |
| MP4 | 8810008631 | PHBT M3 X 6 NI-ZC3 | 4 |

*: Refer to "**BOARD LAYOUTS**" for the location.
**: Refer to "**GENERAL WIRING**" for the connection
**Screw abbreviations** A, B0, BT: Self-tapping PH: Pan head ZK: Black NI-ZU: Nickel-Zinc SUS: Stainless

## [REG UNIT]

| REF NO. | ORDER NO. | DESCRIPTION | | QTY. |
|---|---|---|---|---|
| EP1 | 6910016052 | FP2212B-2 FCC ROHS | [USA] | 1 |
| | 6910016062 | FP2212C-2 RTTE ROHS | [EUR] | 1 |
| | 6910016062 | FP2212C-2 RTTE ROHS | [FRA] | 1 |
| | 6910016062 | FP2212C-2 RTTE ROHS | [ITR] | 1 |
| | 6910016062 | FP2212C-2 RTTE ROHS | [UK] | 1 |
| | 6910016062 | FP2212C-2 RTTE ROHS | [RX] | 1 |
| MP1 | 8930068760 | 2590 MAGNETIC SHIELD | | 1 |

## [DIGISEL UNIT]

| REF NO. | ORDER NO. | DESCRIPTION | QTY. |
|---|---|---|---|
| J1* | 6510028210 | SJ050010 (TMP-J01X-V6) | 1 |
| J2* | 6510028210 | SJ050010 (TMP-J01X-V6) | 1 |
| J10* | 6510020081 | 52808-2071 (2090) | 1 |
| J501* | 6510028210 | SJ050010 (TMP-J01X-V6) | 1 |
| J502* | 6510028210 | SJ050010 (TMP-J01X-V6) | 1 |
| MP1 | 8930061600 | 2590 DIGISEL SPRING Y703 | 1 |
| MP2 | 8930061600 | 2590 DIGISEL SPRING Y703 | 1 |
| MP3 | 8930061600 | 2590 DIGISEL SPRING Y703 | 1 |
| MP4 | 8930061600 | 2590 DIGISEL SPRING Y703 | 1 |
| MP5 | 8510015841 | 2590 D-SHIELD PLATE-1 | 1 |
| MP6 | 8930014140 | EARTH SPRING (D) | 1 |
| MP7 | 8930014140 | EARTH SPRING (D) | 1 |
| MP8 | 8510016021 | 2590 DIGISEL CASE-1 | 1 |
| MP9 | 8110008061 | 2590 DIGISEL COVER-1 | 1 |
| MP10 | 8930014140 | EARTH SPRING (D) | 1 |
| MP11 | 8930014140 | EARTH SPRING (D) | 1 |
| MP12 | 8930014140 | EARTH SPRING (D) | 1 |
| MP13 | 8930014140 | EARTH SPRING (D) | 1 |
| MP14 | 8810007231 | SET SCREWH M3 X 8 ZC3 | 8 |
| MP15 | 8810008661 | PHBT M3 X 8 NI-ZC3 | 11 |

## [NETWORK UNIT]

| REF NO. | ORDER NO. | DESCRIPTION | QTY. |
|---|---|---|---|
| J1* | 6510021561 | 52808-2470 (2490) | 1 |
| J2* | 6510017930 | 1771P145-20 | 1 |
| J3* | 6510017930 | 1771P145-20 | 1 |
| J4* | 6510003521 | S04B-EH-S (LF) (SN) | 1 |
| MP1 | 8510011480 | 1900 AL COVER Y2043 | 1 |

## [FILTER UNIT]

| REF NO. | ORDER NO. | DESCRIPTION | QTY. |
|---|---|---|---|
| J901* | 6510017930 | 1771P145-20 | 1 |
| J902* | 6510022031 | B10B-ZR-SM4-TF (LF) (SN) | 1 |
| J903* | 6510019971 | 52808-1071 | 1 |
| J904* | 6510017930 | 1771P145-20 | 1 |
| J905* | 6510019421 | B8B-ZR-SM4-TF (LF) (SN) | 1 |

## [MEMORY UNIT]

| REF NO. | ORDER NO. | DESCRIPTION | QTY. |
|---|---|---|---|
| J1* | 6510024211 | AXK6S30437YG | 1 |
| J2* | 6510024201 | AXK6S40437YG | 1 |
| MP1 | 8930028840 | SPONGE (DF) | 1 |
| MP2 | 8930028840 | SPONGE (DF) | 1 |
| MP3 | 8930063720 | AL SHEET (AN) | 1 |

*: Refer to SECTION 8 “BOARD LAYOUTS.”

## [ACCESSORIES]

| REF NO. | ORDER NO. | DESCRIPTION | | QTY. |
|---|---|---|---|---|
| J2 | 5610000280 | MP-121M4 | | 1 |
| J3 | 6450001271 | TCP0577-715267 | | 2 |
| J4 | 6450001281 | TCP0587-715467 | | 2 |
| P1 | 5610000410 | AP-319 | | 3 |
| P2 | 5610000430 | AP331BK | | 3 |
| P3 | 5610000420 | AP-338 | | 2 |
| P4 | 5610000660 | P030050 FL | | 2 |
| F1 | 5210000041 | FGB 2A PBF (FGB0 125V) | | 1 |
| W1 | 8900005251 | OPC-510-1 | [USA] | 1 |
| | 8900005130 | OPC-492 (KP4819Y-KS31A) | [EUR] | 1 |
| | 8900005130 | OPC-492 (KP4819Y-KS31A) | [FRA] | 1 |
| | 8900005130 | OPC-492 (KP4819Y-KS31A) | [ITR] | 1 |
| | 8900005120 | OPC-491 (KP610-KS31A) | [UK] | 1 |
| | 8900005130 | OPC-492 (KP4819Y-KS31A) | [RX] | 1 |
| W2 | 8900012770 | OPC-1243 | | 2 |
| EP1 | 0800011101 | TS512MCFX8340I4 | | 1 |
| MP1 | 8930061401 | RACK MOUNT ANGLE(A)-1 | | 2 |
| MP2 | 8810006111 | ROUND FLAT M4 X 9 ZK3BLACK | | 4 |
| MP3 | 8810010281 | ROUND FLAT M4 X 15 ZK3 | | 2 |
| MP4 | 8930063170 | 2590 SUB STAND ASSEMBLY | | 2 |
| MP6 | 8930072140 | MR PROTECTION CAP (I-03631) | | 4 |

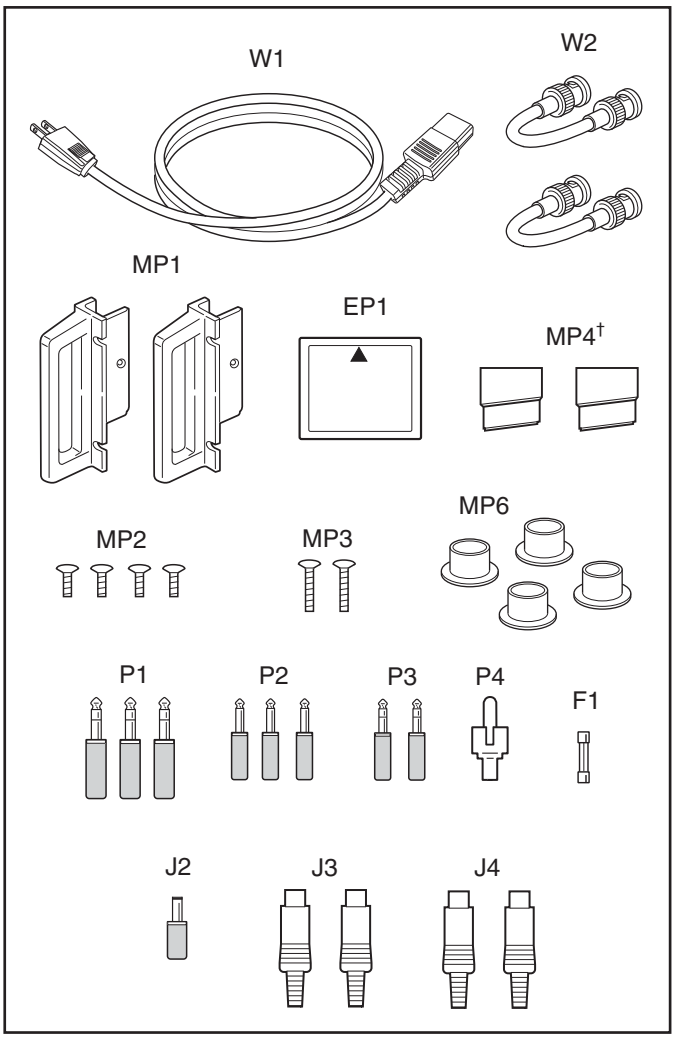


†: Including MP5.

*: Refer to “**BOARD LAYOUTS**” for the location.
**: Refer to “**GENERAL WIRING**” for the connection
**Screw abbreviations** A, B0, BT: Self-tapping PH: Pan head ZK: Black NI-ZU: Nickel-Zinc SUS: Stainless

## • WIRE CONNECTION INFORMATION

| WIRE No. | CONNECTION1 | CONNECTION2 |
|---|---|---|
| A | DISPLAY BOARD J203 | LOGIC UNIT J805 |
| B | DISPLAY BOARD J3 | SW-A BOARD J3 |
| C | DISPLAY BOARD J6 | VR-A BOARD J1 |
| D | DISPLAY BOARD J302 | CF BOARD J3 |
| E | DISPLAY BOARD J5 | VR-D BOARD J1 |
| F | DISPLAY BOARD J301 | LCD UNIT |
| G | DISPLAY BOARD J4 | SW-B BOARD J1 |
| H | DISPLAY BOARD J205 | FRONT UNIT EP11 |
| I | DISPLAY BOARD J1 | TENKEY BOARD J1 |
| J | DISPLAY BOARD J205 | TENKEY BOARD J2 |
| K | DISPLAY BOARD J202 | LOGIC UNIT J806 |
| L | DISPLAY BOARD J201 | LCD UNIT |
| M | TENKEY BOARD J5 | LED BOARD J1 |
| N | TENKEY BOARD J4 | PBT1 BOARD J1 |
| O | TENKEY BOARD J3 | SW-C BOARD J1 |
| P | TENKEY BOARD J7 | FRONT UNIT EP13 |
| Q | TENKEY BOARD J6 | FRONT UNIT EP12 |
| R | PBT2 BOARD J1 | SW-C BOARD J2 |
| S | SW-A BOARD J1 | VR-B BOARD J1 |
| T | SW-A BOARD J2 | VR-C BOARD J1 |
| U | VR-A BOARD J3 | JACK BOARD J1 |
| V | VR-A BOARD J4 | MIC BOARD J2 |
| W | VR-A BOARD J2 | MAIN UNIT J440 |
| X | CF BOARD J1 | LOGIC UNIT J807 |

| *WIRE No. | CONNECTION1 | CONNECTION2 | REF. No |
|---|---|---|---|
| ① | LOGIC UNIT J826 | MAIN UNIT J901 | W28 |
| ② | LOGIC UNIT J810 | MAIN UNIT J451 | W51~65 |
| ③ | LOGIC UNIT J815 | RXPLL-B UNIT J2 | W4 |
| ④ | LOGIC UNIT J814 | OSC UNIT UNIT J2 | W11 |
| ⑤ | LOGIC UNIT J813 | DIGISEL UNIT J10 | W5 |
| ⑥ | LOGIC UNIT J816 | RXPLL-A UNIT J2 | W3 |
| ⑦ | LOGIC UNIT J808 | MAIN UNIT J940 | W1 |
| ⑧ | LOGIC UNIT J809 | MAIN UNIT J900 | W2 |
| ⑩ | LOGIC UNIT J825 | SCOPE UNIT J910 | W178~185 |
| ⑪ | MAIN UNIT J400 | RXPLL-A UNIT J1701 | W17 |
| ⑫ | MAIN UNIT J450 | DC-DC UNIT J2 | W108~118 |
| ⑬ | LOGIC UNIT J802 | SCOPE UNIT J907 | W12 |
| ⑭ | MAIN UNIT J492 | CHASSIS UNIT MF1 | (MF2) |
| ⑮ | LOGIC UNIT J822 | MAIN UNIT J142 | W51~52 |
| ⑯ | MAIN UNIT J401 | RXPLL-A UNIT J1501 | W85~86 |
| ⑰ | MAIN UNIT J399 | RXPLL-B UNIT J681 | W95~96 |
| ⑱ | MAIN UNIT J503 | RXPLL-A UNIT J421 | W87~88 |
| ⑲ | MAIN UNIT J801 | PA200W BOARD J1 | W106~107 |
| ⑳ | MAIN UNIT J808 | SCOPE UNIT J11 | W83~84 |
| ㉑ | MAIN UNIT J403 | RXPLL-B UNIT J1701 | W18 |
| ㉒ | MAIN UNIT J502 | RXPLL-A UNIT J561 | W89~90 |
| ㉓ | MAIN UNIT J501 | RXPLL-A UNIT J681 | W91~92 |
| ㉔ | MAIN UNIT J491 | OSC UNIT UNIT J71 | W97~98 |
| ㉕ | MAIN UNIT J410 | SCOPE UNIT J4 | W16 |
| ㉖ | MAIN UNIT J430 | PA200W BOARD J2 | W101~105 |
| ㉗ | MAIN UNIT J411 | SCOPE UNIT J906 | W15 |
| ㉘ | RXPLL-A UNIT J1002 | DIGISEL UNIT J10 | W5 |
| ㉙ | RXPLL-A UNIT J601 | RXPLL-A UNIT J1001 | W149~150 |
| ㉚ | SCOPE UNIT J1 | RXPLL-A UNIT J1301 | W127~128 |
| ㉛ | RXPLL-A UNIT J351 | RXPLL-A UNIT J1101 | W151~152 |
| ㉜ | RXPLL-A UNIT J1002 | OSC UNIT UNIT J72 | W153~154 |
| ㉝ | RXPLL-B UNIT J1002 | DIGISEL UNIT J501 | W147~148 |
| ㉞ | SCOPE UNIT J2 | RXPLL-B UNIT J1301 | W129~130 |
| ㉟ | RXPLL-B UNIT J351 | RXPLL-B UNIT J1101 | W155~156 |
| ㊱ | SCOPE UNIT J3 | RXPLL-B UNIT J601 | W131~132 |
| ㊲ | RXPLL-B UNIT J561 | RXPLL-B UNIT J831 | W157~158 |
| ㊳ | RXPLL-B UNIT J1002 | OSC UNIT UNIT J73 | W159~160 |
| ㊴ | MAIN UNIT J404 | RXPLL-B UNIT J1501 | W93~94 |
| ㊵ | PA200W BOARD J5 | DC-DC UNIT J5 | W171~174 |
| ㊶ | DC-DC UNIT W1 | REG UNIT | W22 |
| ㊷ | FILTER UNIT J901 | PA200W BOARD J401 | W23 |
| ㊸ | FILTER UNIT J903 | ANT-SW J4 | W26 |
| ㊹ | CTRL BOARD J252 | NETWORK BOARD J3 | W2(Network) |
| ㊺ | CTRL BOARD J251 | NEWORK BOARD J2 | W1(Network) |
| ㊻ | ANT-SW UNIT J1 | CTRL BOARD J301 | W25 |
| ㊼ | CTRL BOARD J351 | BPF UNIT J106 | W141~142 |
| ㊽ | LOGIC UNIT J811 | CTRL BOARD J1 | W7 |
| ㊾ | FILTER UNIT J904 | CTRL BOARD J101 | W24 |
| ㊿ | FILTER UNIT J905 | CTRL BOARD J53 | W27 |
| (51) | FILTER UNIT J902 | CTRL BOARD J52 | W161~170 |
| (52) | DIGISEL UNIT J2 | BPF UNIT J101 | W133~134 |
| (53) | LOGIC UNIT J812 | BPF UNIT J1 | W6 |
| (54) | DIGISEL UNIT J502 | BPF UNIT J601 | W135~136 |
| (55) | RXPLL-A UNIT J1201 | BPF UNIT J102 | W139~140 |
| (56) | ANT-SW UNIT J3 | BPF UNIT J108 | W176~177 |
| (57) | RXPLL-B UNIT J1201 | BPF UNIT J602 | W137~138 |
| (58) | MAIN UNIT J802 | BPF UNIT J107 | W99~100 |
| (59) | CTRL BOARD J51 | NETWORK BOARD J1 | W3 |
| (60) | LOGIC UNIT J824 | PA UNIT MF1 | (MF1) |
| (61) | LOGIC UNIT J823 | CHASSIS UNIT SP1 | (SP1) |
| (62) | LOGIC UNIT J820 | DC-DC UNIT J4 | W73~82 |
| (63) | LOGIC UNIT J821 | DC-DC UNIT J3 | W66~72 |
| (65) | LOGIC UNIT J803 | SCOPE UNIT J909 | W13 |
| (66) | LOGIC UNIT J804 | SCOPE UNIT J908 | W14 |
| (68) | CTRL BOARD J2 | TUNER UNIT MF1/2 | W51~60 |
| (69) | NETWORK BOARD J4 | TUNER UNIT MF3 | (MF3) |
| (70) | PA UNIT EP501/EP502 | REG UNIT | W1(PA) |
| (71) | ANT-SW J2 | BPF UNIT J506 | W143~144 |

*: WIRE No. is assigned for the exploded views page 6-9 to 6-12, but for actual wires.

• **OVERALL**

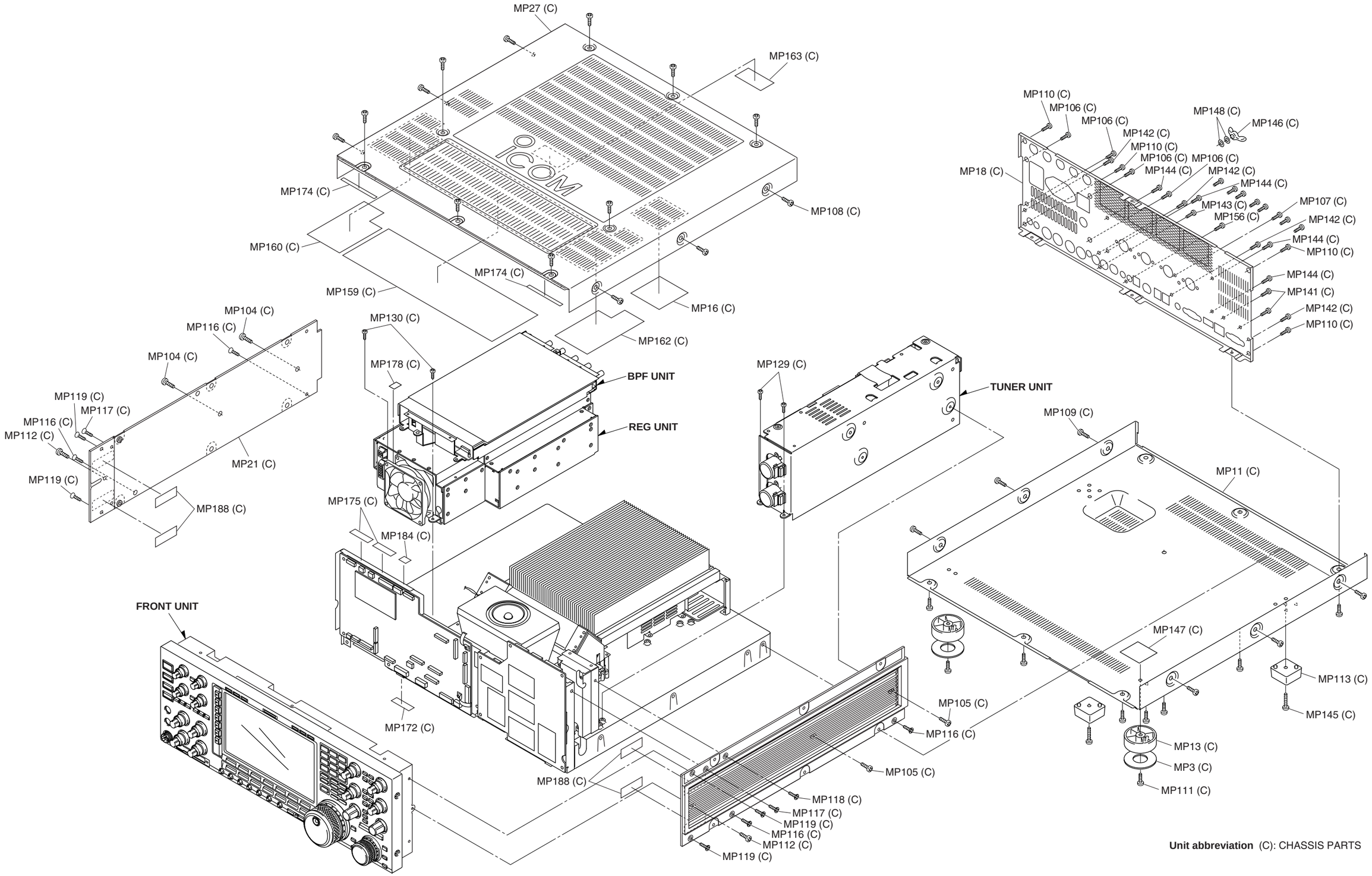


**Unit abbreviation** (C): CHASSIS PARTS

## • FRONT UNIT

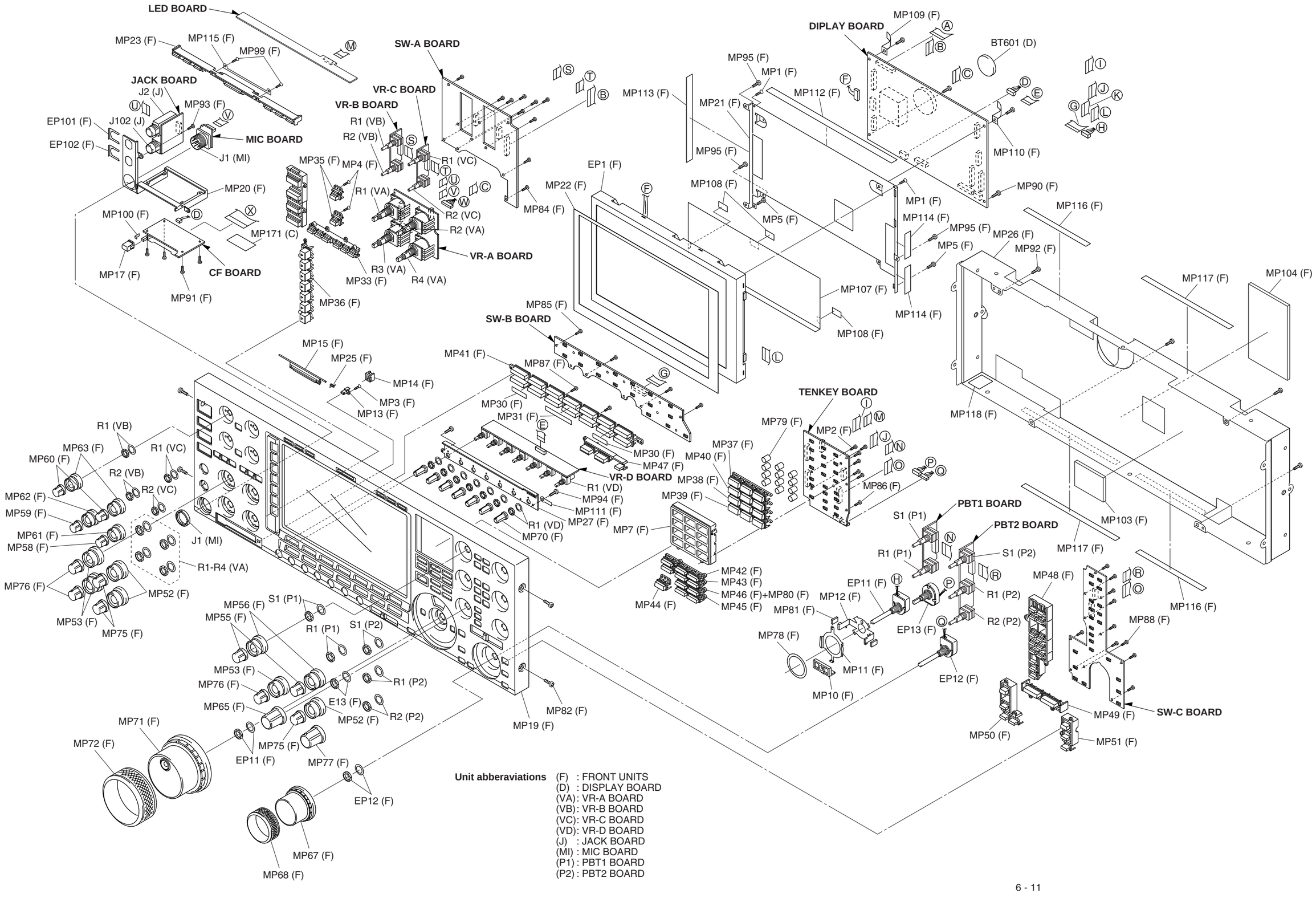


**Unit abberaviations**

(F) : FRONT UNITS
(D) : DISPLAY BOARD
(VA): VR-A BOARD
(VB): VR-B BOARD
(VC): VR-C BOARD
(VD): VR-D BOARD
(J) : JACK BOARD
(MI) : MIC BOARD
(P1) : PBT1 BOARD
(P2) : PBT2 BOARD

• **TOP SIDE**

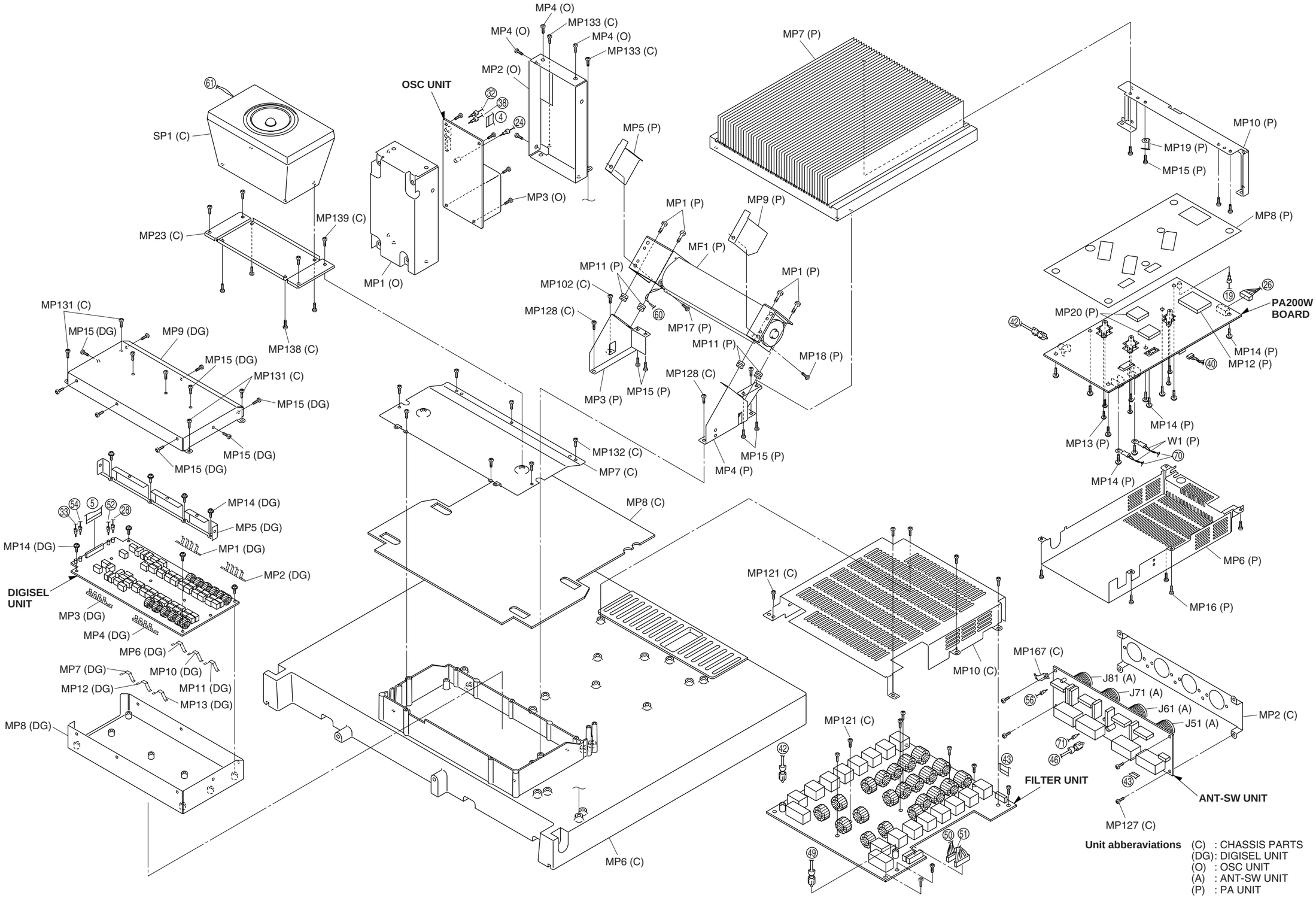


**Unit abberaviations**
(C) : CHASSIS PARTS
(DG): DIGISEL UNIT
(O) : OSC UNIT
(A) : ANT-SW UNIT
(P) : PA UNIT

## • FRONT AND BOTTOM SIDE

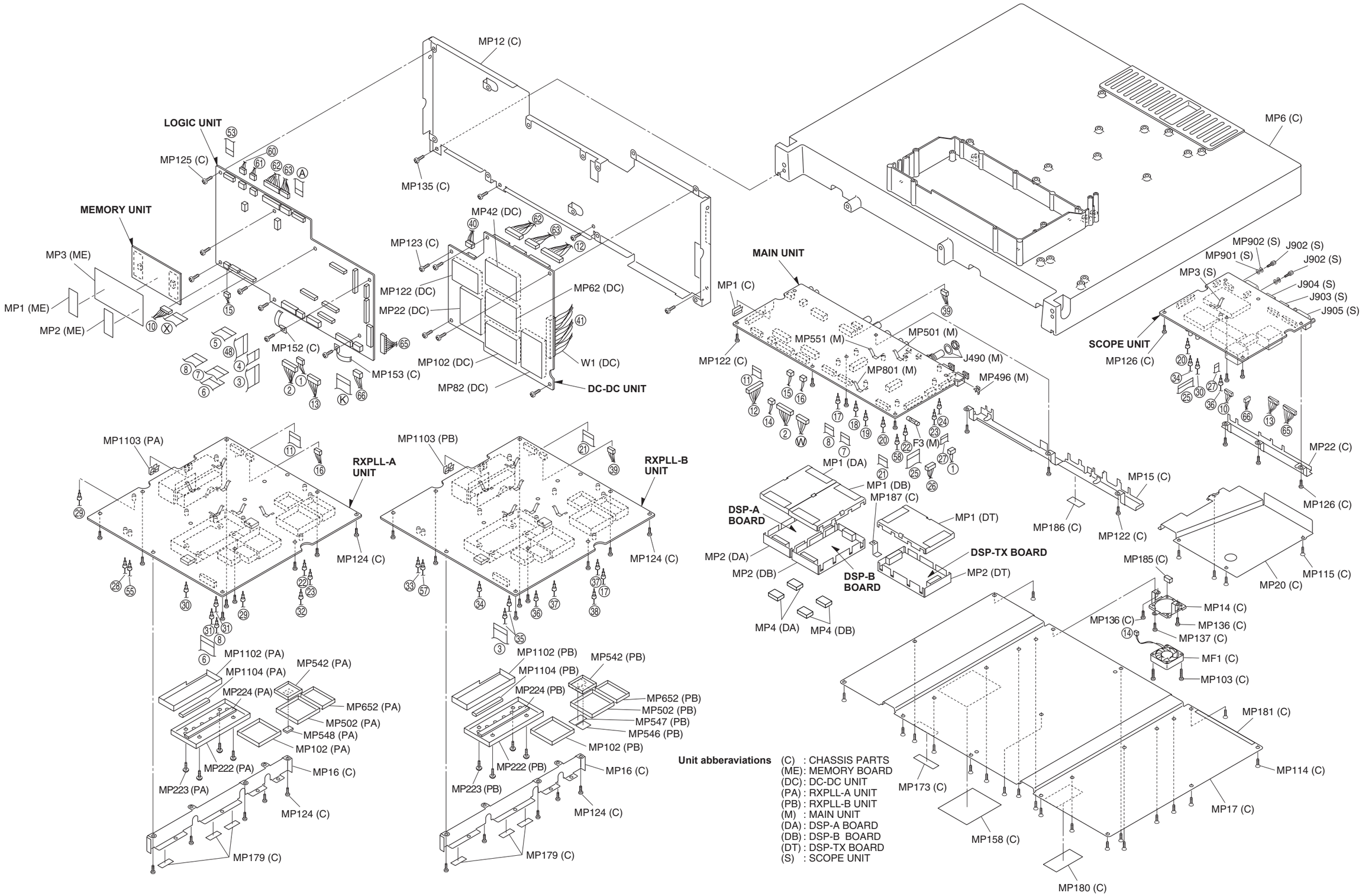


**Unit abberaviations**

(C) : CHASSIS PARTS
(ME): MEMORY BOARD
(DC): DC-DC UNIT
(PA) : RXPLL-A UNIT
(PB) : RXPLL-B UNIT
(M) : MAIN UNIT
(DA) : DSP-A BOARD
(DB) : DSP-B BOARD
(DT) : DSP-TX BOARD
(S) : SCOPE UNIT

## • REG, BPF AND TUNER UNITS

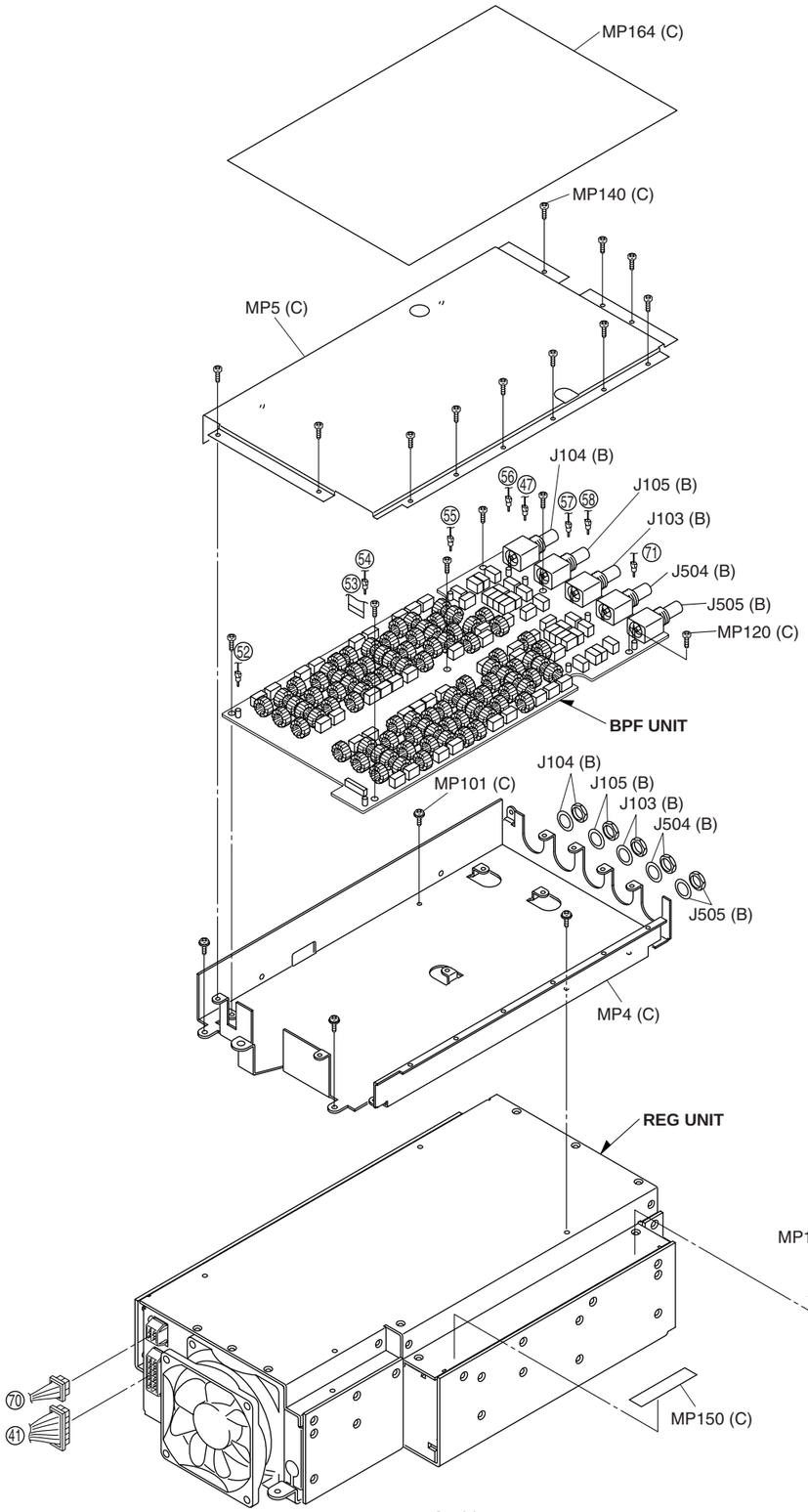


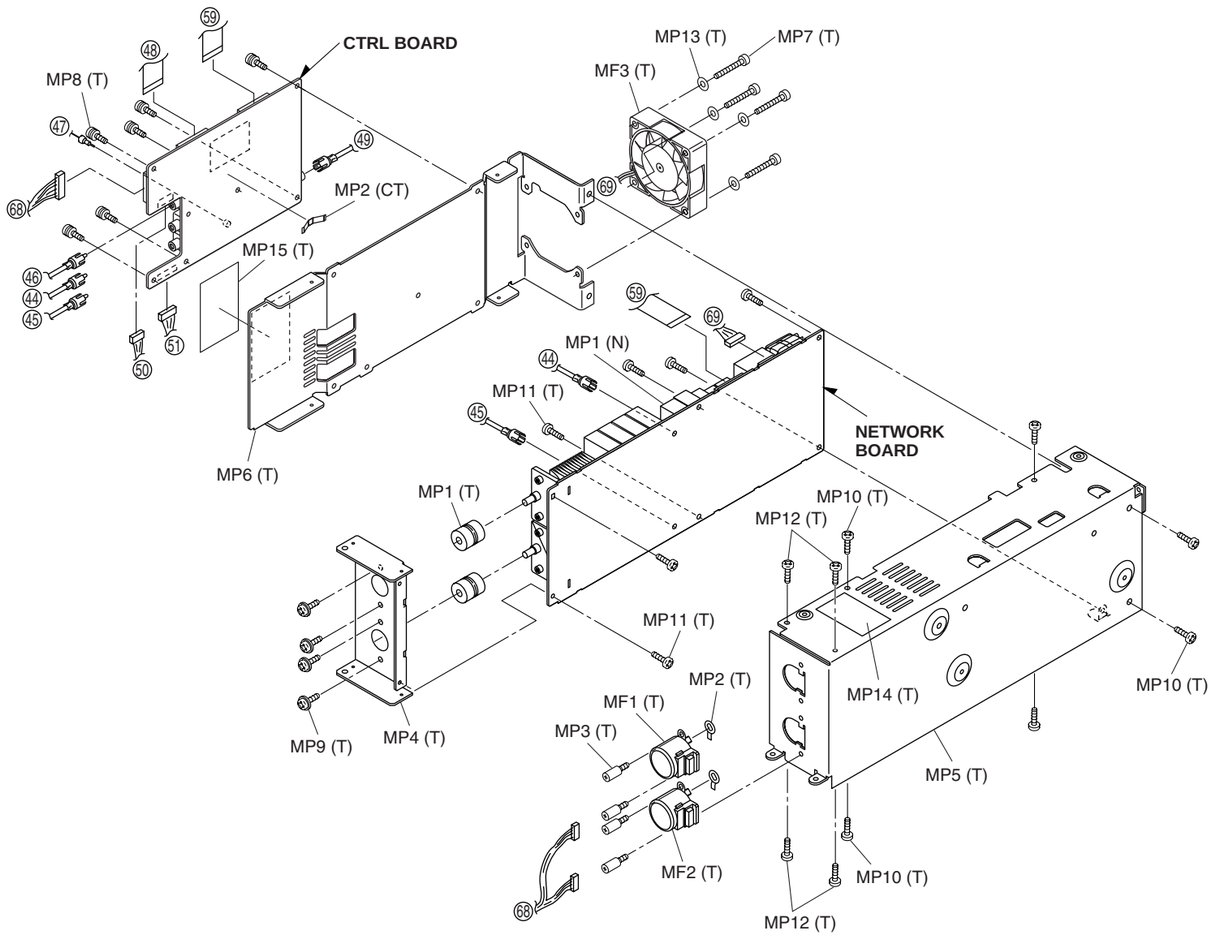


**Unit abberaviations** (C) : CHASSIS PARTS
(B) : BPF UNIT
(T) : TUNER UNIT
(CT) : CTRL BOARD
(N) : NETWORK BOARD

# SECTION 7 SEMI-CONDUCTOR INFORMATION

## • TRANSISTORS AND FET'S

| | | | | |
|---|---|---|---|---|
| **2SA1162 GR**<br>(Symbol: SG)<br> 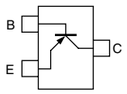 | **2SA1576A T106 R**<br>(Symbol: FR)<br> 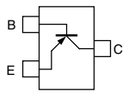 | **2SB1119 S TD**<br>(Symbol: BB)<br> 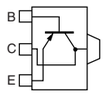 | **2SB1123 T TD**<br>(Symbol: BF)<br> 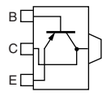 | **2SB1132 T100 R**<br>(Symbol: BAR)<br> 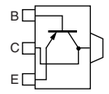 |
| **2SB1201 S**<br>(Symbol: B1201)<br> 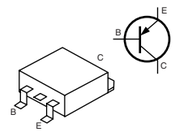 | **2SC3324 GR**<br>(Symbol: CBG)<br> 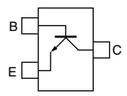 | **2SC3647 S TD**<br>(Symbol: CC)<br> 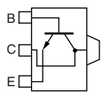 | **2SC3950D**<br>(Symbol: 2042B)<br> 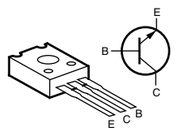 | **2SC4081 T106 R**<br>(Symbol: BR)<br> 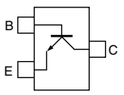 |
| **2SC4081 T106 S**<br>(Symbol: BS)<br> 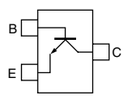 | **2SC4097 T106 Q**<br>(Symbol: CQ)<br> 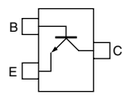 | **2SC4116 Y**<br>(Symbol: LY)<br> 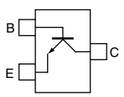 | **2SC4215 O**<br>(Symbol: QO)<br> 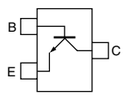 | **2SC4402 3 TL**<br>(Symbol: PT3)<br> 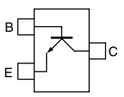 |
| **2SC4406**<br>(Symbol: JT)<br> 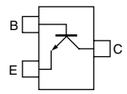 | **2SC4673 D TD**<br>(Symbol: CO)<br> 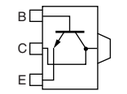 | **2SC4835 R**<br>(Symbol: 3M)<br> 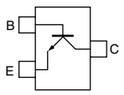 | **2SC5226 4 TL**<br>(Symbol: LN4)<br> 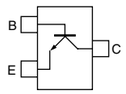 | **2SC5501 4 TR**<br>(Symbol: LN4)<br> 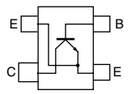 |
| **2SC5551**<br>(Symbol: EB)<br> 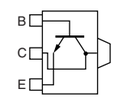 | **2SD1619 T TD**<br>(Symbol: DB)<br> 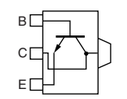 | **2SD1664 T100Q**<br>(Symbol: DAQ)<br> 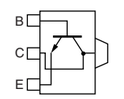 | **2SD1801 S TL**<br>(Symbol: CE)<br> 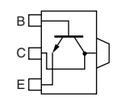 | **2SJ144 GR**<br>(Symbol: VG)<br> 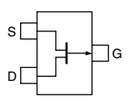 |
| **2SK210 GR**<br>(Symbol: YG)<br> 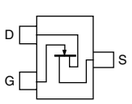 | **2SK515 T1B**<br>(Symbol: X33)<br> 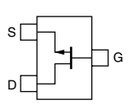 | **2SK880 GR**<br>(Symbol: XG)<br> 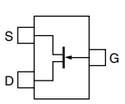 | **2SK882 GR**<br>(Symbol: TGR)<br> 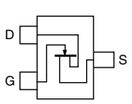 | **2SK3018 T106**<br>(Symbol: KN)<br> 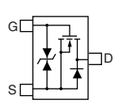 |
| **3SK294**<br>(Symbol: UV)<br> 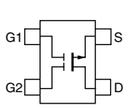 | **CPH3403 TL**<br>(Symbol: KC)<br> 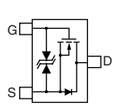 | **DTA114EUA T106**<br>(Symbol: 14)<br> 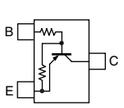 | **DTA144 EE TL**<br>(Symbol: 16)<br> 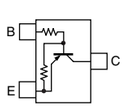 | **DTC114EUA T106**<br>(Symbol: 24)<br> 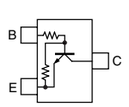 |

| | | | | |
|---|---|---|---|---|
| **DTC114TUA T106**<br>(Symbol: 04)<br> 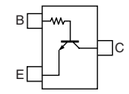 | **DTC144EUA T106**<br>(Symbol: 26_)<br> 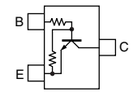 | **DTC144 TE**<br>(Symbol: 06)<br> 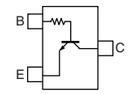 | **DTD113ZK**<br>(Symbol: G21)<br> 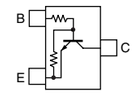 | **MMBFU310LT1**<br>(Symbol: 6C)<br> 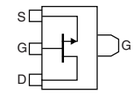 |
| **RD01MUS1**<br>(Symbol: K2)<br> 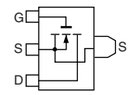 | **PD55003**<br>(Symbol: PD55003)<br> 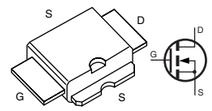 | **RN2427**<br>(Symbol: RG)<br> 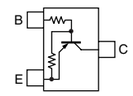 | **SD2918**<br>(Symbol: M113)<br> 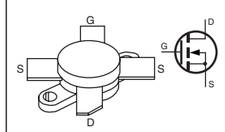 | **SD2931**<br>(Symbol: M174)<br> 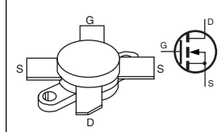 |
| **UMH11N TN**<br>(Symbol: H11)<br> 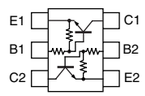 | **XP4311**<br>(Symbol: 3X)<br> 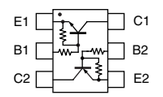 | | | |

## • DIODES

| | | | | |
|---|---|---|---|---|
| **1SR154-400**<br>(Symbol: 14)<br> 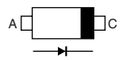 | **1SS301**<br>(Symbol: B3)<br> 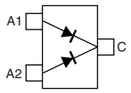 | **1SS312**<br>(Symbol: BF)<br> 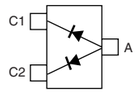 | **1SS319**<br>(Symbol: A4)<br> 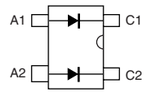 | **1SS355**<br>(Symbol: A)<br> 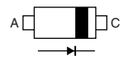 |
| **1SV232**<br>(Symbol: T9)<br> 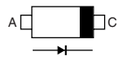 | **1SV263 TL**<br>(Symbol: JV)<br> 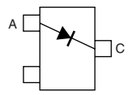 | **1SV307**<br>(Symbol: TX)<br> | **CPH5513 TL**<br>(Symbol: 2B)<br> 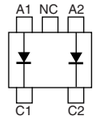 | **DA221 TL**<br>(Symbol: K)<br> 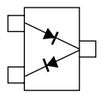 |
| **DAN222TL**<br>(Symbol: N)<br> 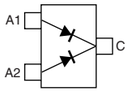 | **DAP222 TL**<br>(Symbol: P)<br> 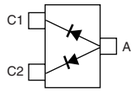 | **DSM3MA4**<br>(Symbol: SA4)<br> 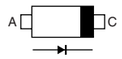 | **HSB88WSTR**<br>(Symbol: Silver line)<br> 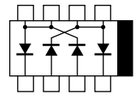 | **HSM88AS TR**<br>(Symbol: C1)<br> 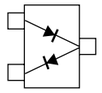 |
| **MA114**<br>(Symbol: 1E)<br> 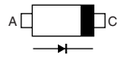 | **MA2S111**<br>(Symbol: A)<br> 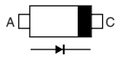 | **MA2S728**<br>(Symbol: B)<br> 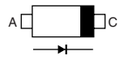 | **MA77**<br>(Symbol: 4B)<br> 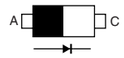 | **MA357**<br>(Symbol: 7K)<br> 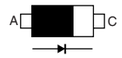 |
| **MA742**<br>(Symbol: M1U)<br> 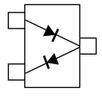 | **MA8033 H**<br>(Symbol: 3^3)<br> 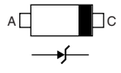 | **MA8047 M**<br>(Symbol: 4-7)<br> 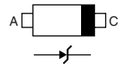 | **MA8091 M**<br>(Symbol: 9-1)<br> 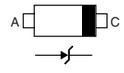 | **MBRD835LT4**<br>(Symbol: B835L)<br> |
| **MMBV3700LT1**<br>(Symbol: 4R)<br> 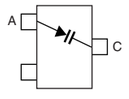 | **RB081L-20**<br>(Symbol: 39)<br> 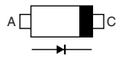 | **RB706F-40 T106**<br>(Symbol: 3J)<br> 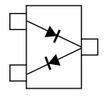 | **RD2.7M B1**<br>(Symbol: 271)<br> 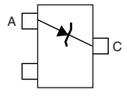 | **RD5.1M T2B2**<br>(Symbol: 512)<br> 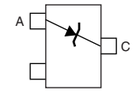 |
| **RD5.6M T2B2**<br>(Symbol: 562)<br> 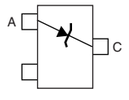 | **XB15A204**<br>(Symbol: None)<br> 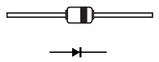 | | | |

# SECTION 8 BOARD LAYOUTS

The combination of top side and bottom side of this page shows the actual configuration of P.C. board.

## • DISPLAY BOARD (TOP VIEW)

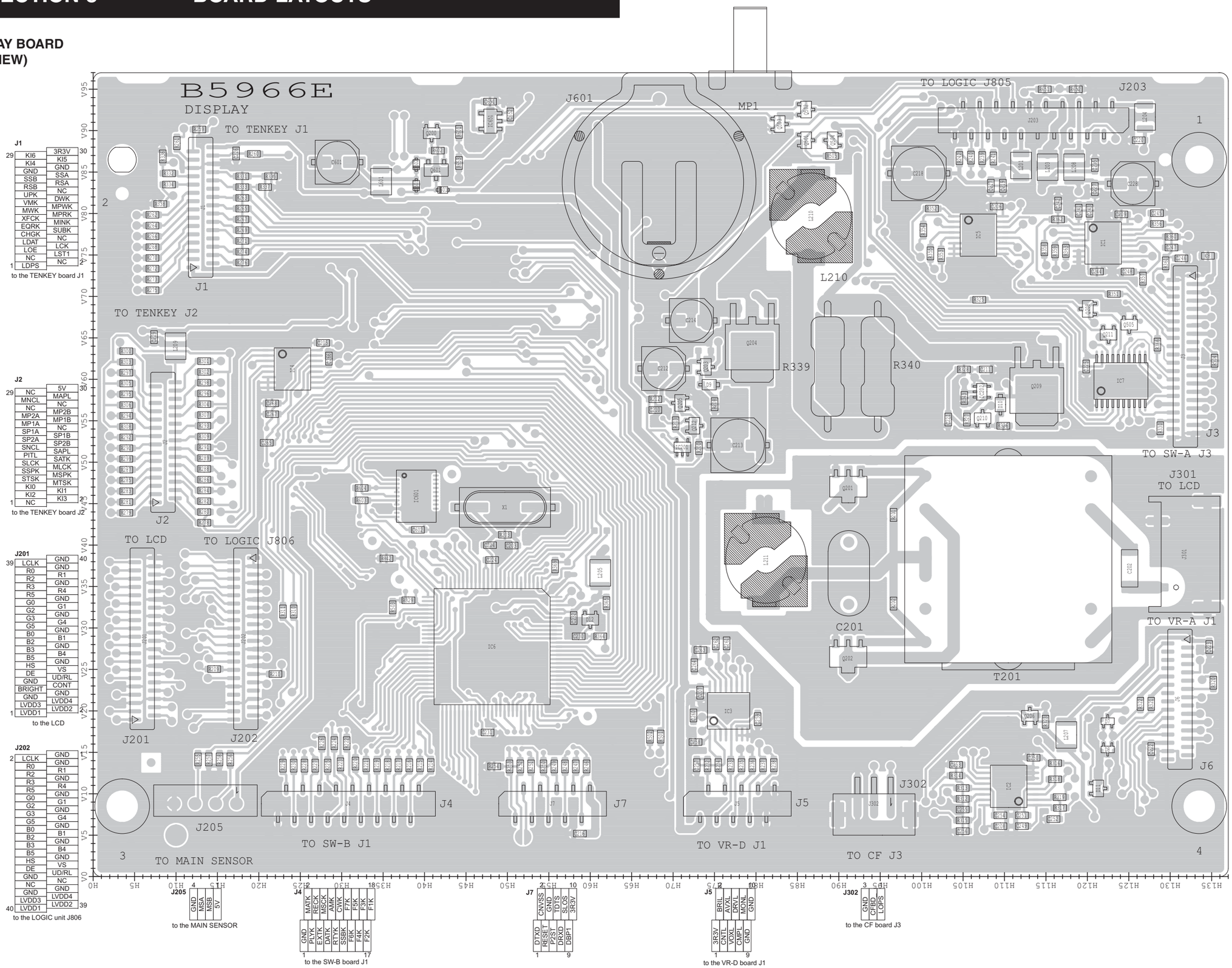


**J1**

| | | | |
|---|---|---|---|
| 29 | KI6 | 3R3V | 30 |
| | KI4 | KI5 | |
| | GND | GND | |
| | SSB | RSA | |
| | RSB | NC | |
| | UPK | DWK | |
| | VMK | MPWK | |
| | MWK | MPRK | |
| | XFCK | MINK | |
| | EQRK | SUBK | |
| | CHGK | NC | |
| | LDAT | LCK | |
| | LOE | LST1 | |
| | NC | NC | |
| 1 | LDPS | NC | |

to the TENKEY board J1

**J2**

| | | | |
|---|---|---|---|
| 29 | NC | 5V | 30 |
| | MNCL | MAPL | |
| | NC | NC | |
| | MP2A | MP2B | |
| | MP1A | MP1B | |
| | SP1A | SP1B | |
| | SP2A | SP2B | |
| | SNCL | SAPL | |
| | PITL | SATK | |
| | SLCK | MLCK | |
| | SSPK | MSPK | |
| | STSK | MTSK | |
| | KI0 | KI1 | |
| | KI2 | KI3 | |
| 1 | NC | | 2 |

to the TENKEY board J2

**J201**

| | | | |
|---|---|---|---|
| 39 | LCLK | GND | 40 |
| | R0 | GND | |
| | R2 | R1 | |
| | R3 | GND | |
| | R5 | R4 | |
| | G0 | GND | |
| | G2 | G1 | |
| | G3 | GND | |
| | G5 | G4 | |
| | B0 | GND | |
| | B2 | B1 | |
| | B3 | GND | |
| | B5 | B4 | |
| | HS | GND | |
| | DE | VS | |
| | GND | UD/RL | |
| | BRIGHT | CONT | |
| | GND | GND | |
| | LVDD3 | LVDD4 | |
| 1 | LVDD1 | LVDD2 | 20 |

to the LCD

**J202**

| | | | |
|---|---|---|---|
| 2 | LCLK | GND | 1 |
| | R0 | GND | |
| | R2 | R1 | |
| | R3 | GND | |
| | R5 | R4 | |
| | G0 | GND | |
| | G2 | G1 | |
| | G3 | GND | |
| | G5 | G4 | |
| | B0 | GND | |
| | B2 | B1 | |
| | B3 | GND | |
| | B5 | B4 | |
| | HS | GND | |
| | DE | VS | |
| | GND | UD/RL | |
| | NC | NC | |
| | GND | GND | |
| | LVDD3 | LVDD4 | |
| 40 | LVDD1 | LVDD2 | 39 |

to the LOGIC unit J806

**J205**

| | | | | |
|---|---|---|---|---|
| 4 | | | | 1 |
| GND | MSA | MSB | 5V | |

to the MAIN SENSOR

**J4**

| | | | | | | | | | |
|---|---|---|---|---|---|---|---|---|---|
| | | | | | | | | | 18 |
| | MATK | RECK | MSCK | AMK | CWK | F7K | F6K | F3K | F1K |
| GND | PLYK | EATK | RTYK | SSBK | F6K | F4K | F2K | | |
| 1 | | | | | | | | | 17 |

to the SW-B board J1

**J7**

| | | | | | |
|---|---|---|---|---|---|
| 2 | | | | | 10 |
| CNVSS | GND | TDIS | SLOS | 3R3V | |
| DTXD | RESET | P2ST | DRXD | DBP1 | |
| 1 | | | | | 9 |

**J5**

| | | | | | |
|---|---|---|---|---|---|
| 2 | | | | | 10 |
| BRKL | DWXL | DWXL | MONL | GND | |
| 3R3V | CNTL | VOXL | CMPL | GND | |
| 1 | | | | | 9 |

to the VR-D board J1

**J302**

| | | | |
|---|---|---|---|
| 3 | | | 1 |
| GND | CFBD | LOPS | |

to the CF board J3

**J203**

| | | | | | | | | | | |
|---|---|---|---|---|---|---|---|---|---|---|
| 19 | | | | | | | | | | 1 |
| GND | LTXD | LG_PWR | LG_RES | GND | C15V | C15V | 8V | GND | VDD5VF | |
| GND | LRXD | NC | NC | +3R3V | GND | C15V | C15V | MSND | NC | |
| 20 | | | | | | | | | | 2 |

to the LOGIC unit J805

**J3**

| | | | |
|---|---|---|---|
| 2 | GND | GND | 1 |
| | MSQL | 3R3V | |
| | PWRL | MAGL | |
| | SSQL | MIGL | |
| | DELL | SAGL | |
| | KI11 | KYSL | |
| | KI9 | KI10 | |
| | KI7 | KI8 | |
| | NC | NC | |
| | NC | NC | |
| | NC | NC | |
| | MOND | PWRK | |
| | TRAK | SNBD | |
| | SNRD | SAGD | |
| | MNBD | MNRD | |
| | MAGD | TMD | |
| | TN2D | TN1D | |
| | VOXD | PWRD | |
| | STBD | LDPS | |
| | NC | GND | 29 |
| 40 | GND | | |

to the SW-A board J3

**J301**

| | | |
|---|---|---|
| 2 | GND | |
| 1 | CFLH | |

to the LCD

**J6**

| | | | |
|---|---|---|---|
| 2 | MSND | M8V | 1 |
| | NC | NC | |
| | NC | NC | |
| | NC | NC | |
| | PHNI | SQLS | |
| | DSHK | NC | |
| | NC | DOTK | |
| | NC | MUDL | |
| | SAFL | NC | |
| | MAFL | SRFL | |
| | SNRL | MRFL | |
| | MNRL | SNBL | |
| | 3R3V | MNBL | |
| | GND | NC | |
| 30 | NC | NC | 29 |

to the VR-A board J1

- **DISPLAY BOARD (BOTTOM VIEW )**

**The combination of top side and bottom side of this page shows the actual configuration of P.C. board.**

MP1

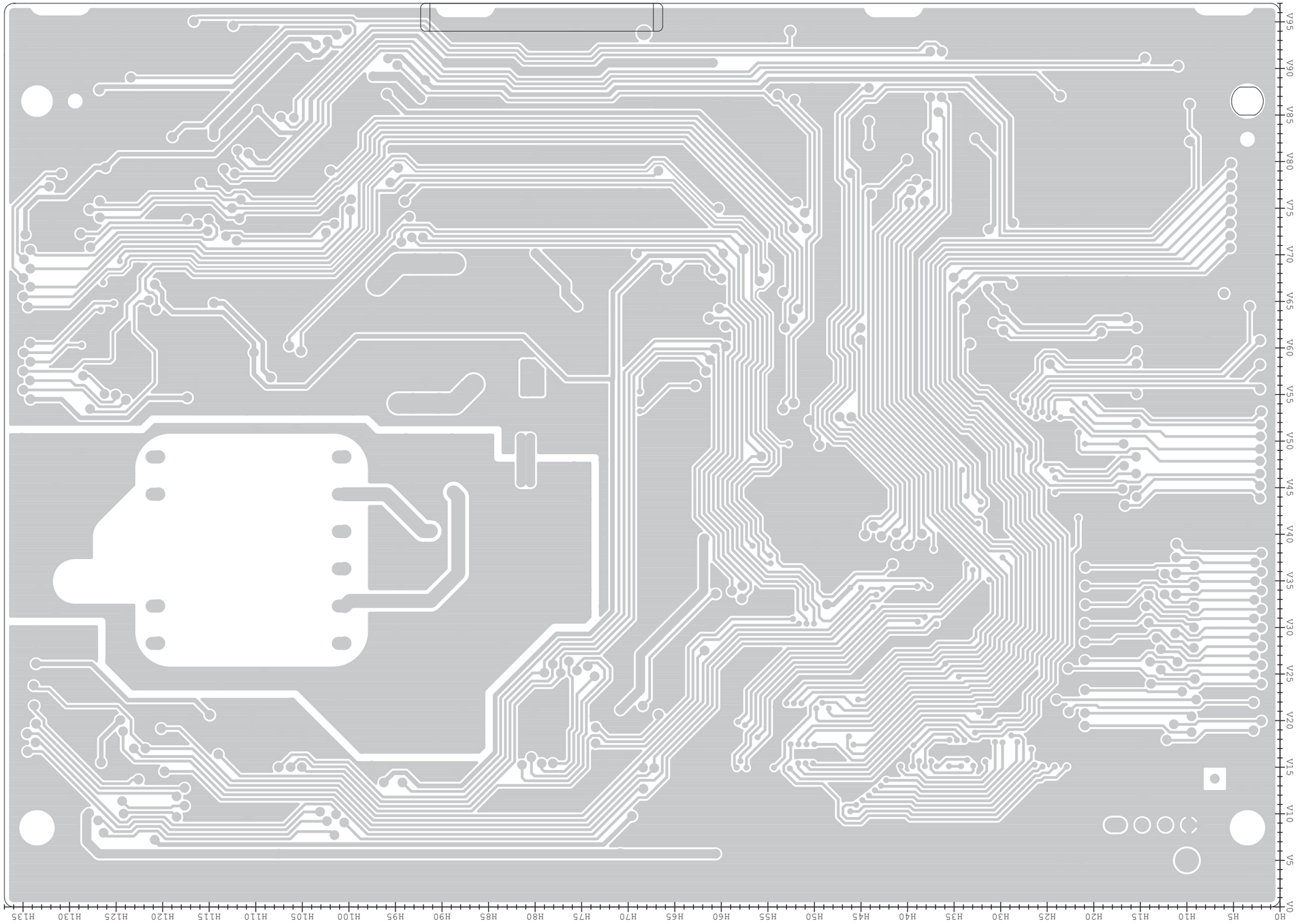

The combination of top side and bottom side of this page shows the actual configuration of P.C. board.

## • SW-A BOARD (TOP VIEW)

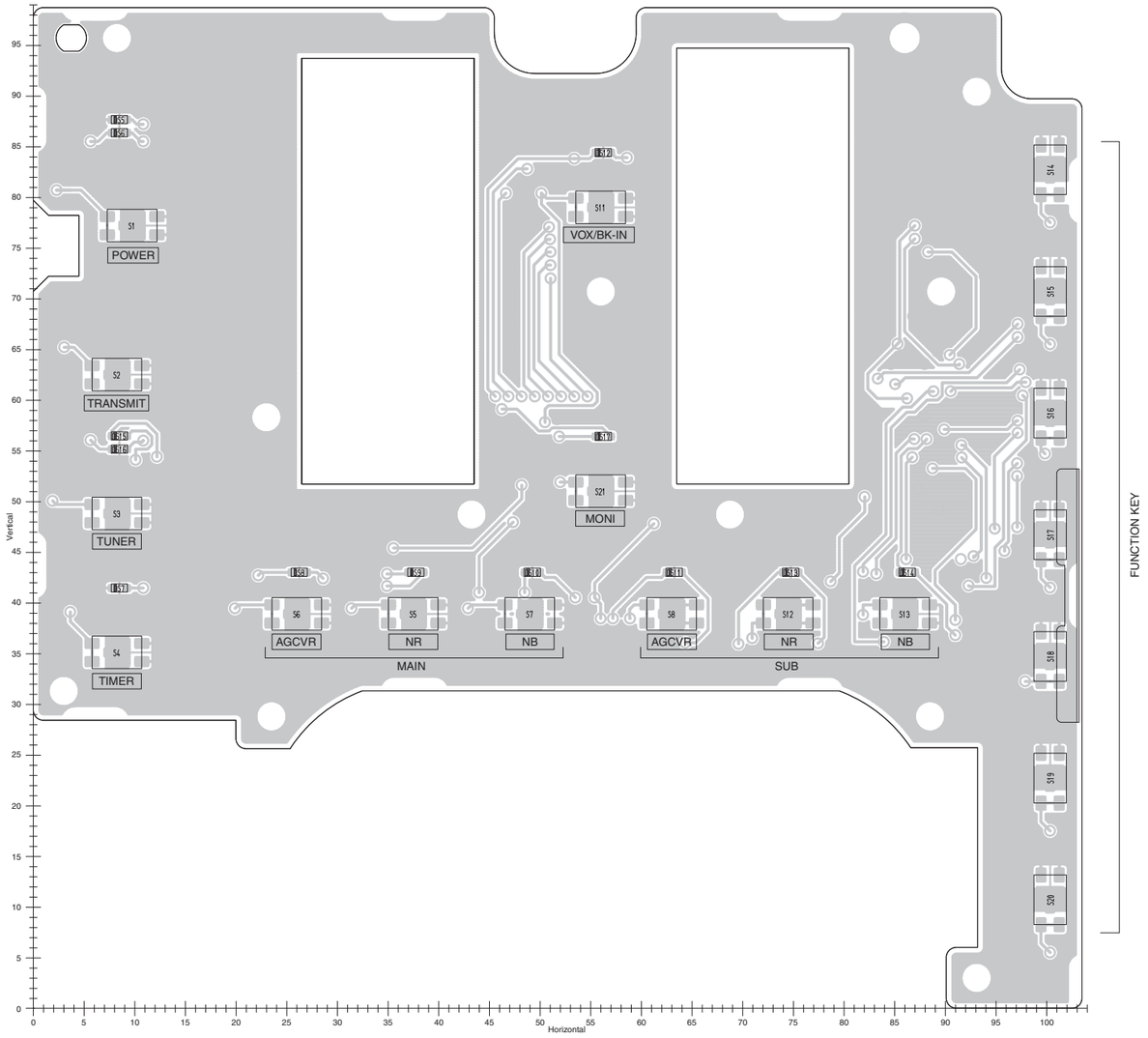


## • SW-B BOARD (TOP VIEW)

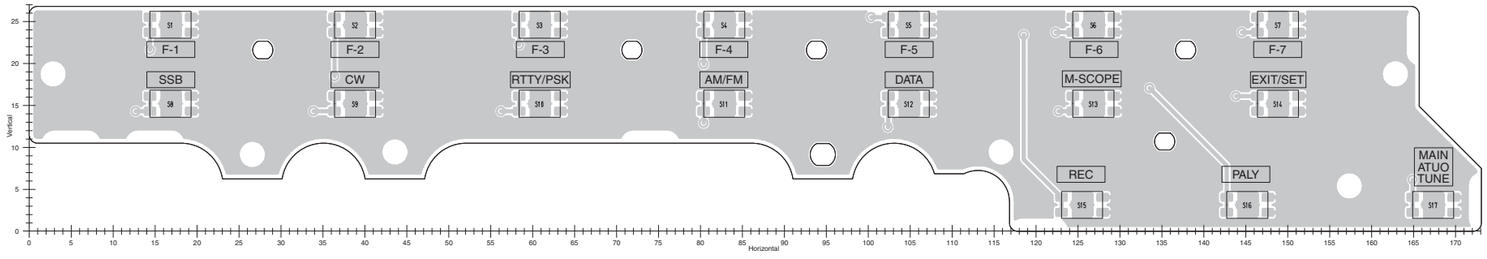


## • SW-C BOARD (TOP VIEW)

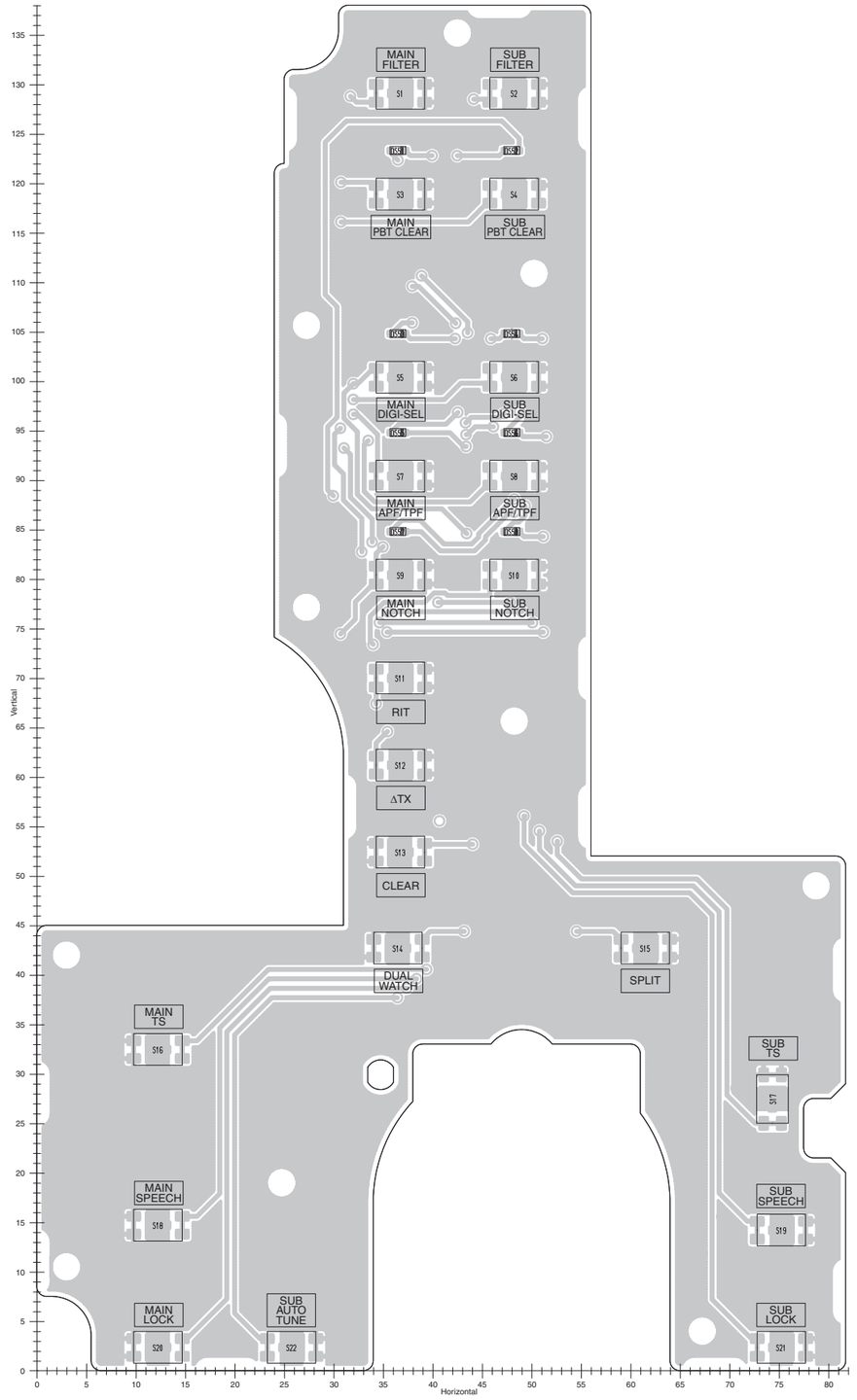

The combination of top side and bottom side of this page shows the actual configuration of P.C. board.

## • SW-C BOARD (BOTTOM VIEW)

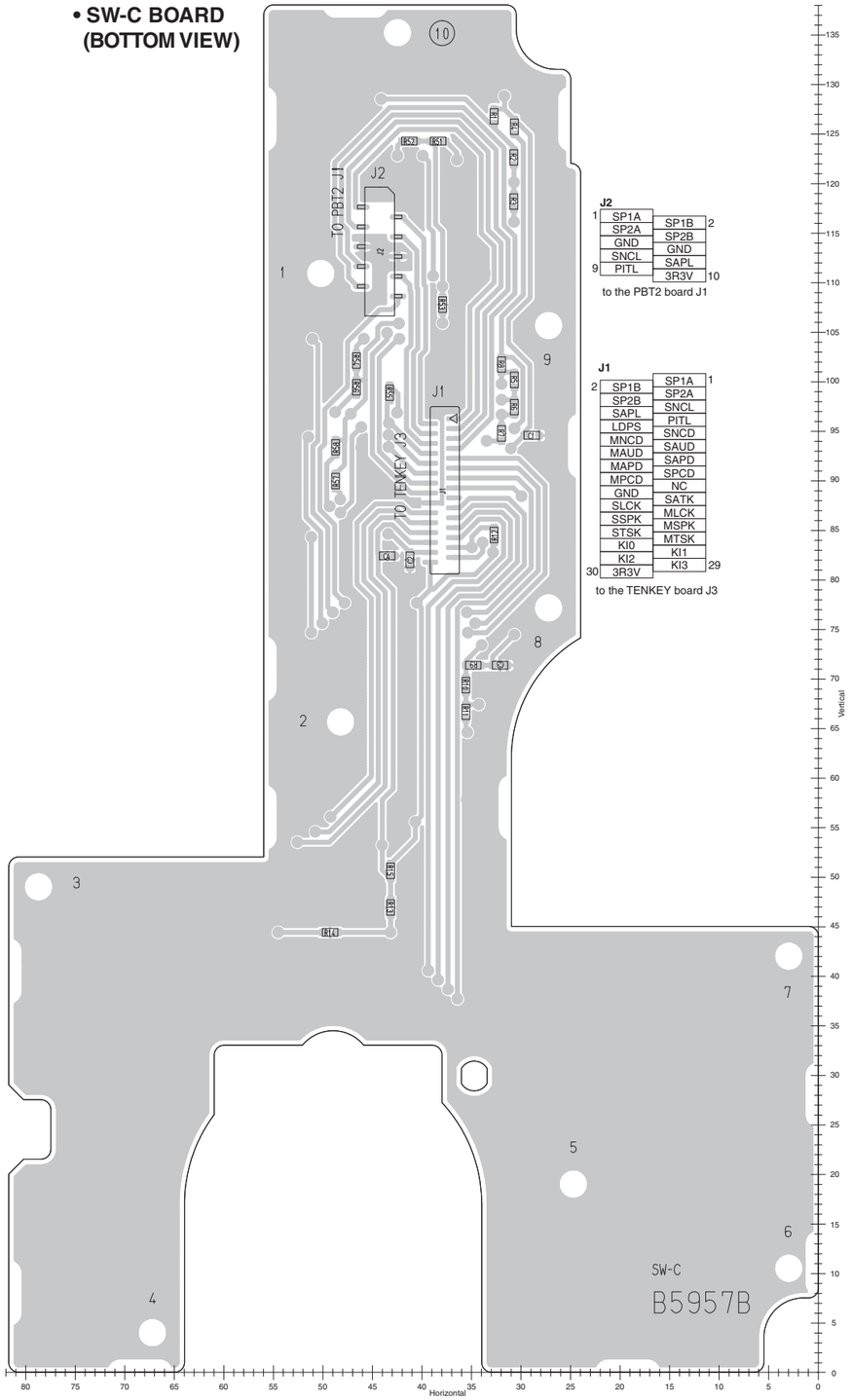


**J2**

| | | | |
|---|---|---|---|
| 1 | SP1A | SP1B | 2 |
| | SP2A | SP2B | |
| | GND | GND | |
| | SNCL | SAPL | |
| 9 | PITL | 3R3V | 10 |

to the PBT2 board J1

**J1**

| | | | |
|---|---|---|---|
| 2 | SP1B | SP1A | 1 |
| | SP2B | SP2A | |
| | SAPL | SNCL | |
| | LDPS | PITL | |
| | MNCD | SNCD | |
| | MAUD | SAUD | |
| | MAPD | SAPD | |
| | MPCD | SPCD | |
| | GND | NC | |
| | SLCK | SATK | |
| | SSPK | MLCK | |
| | STSK | MSPK | |
| | KI0 | MTSK | |
| | KI2 | KI1 | |
| 30 | 3R3V | KI3 | 29 |

to the TENKEY board J3

## • SW-A BOARD (BOTTOM VIEW)

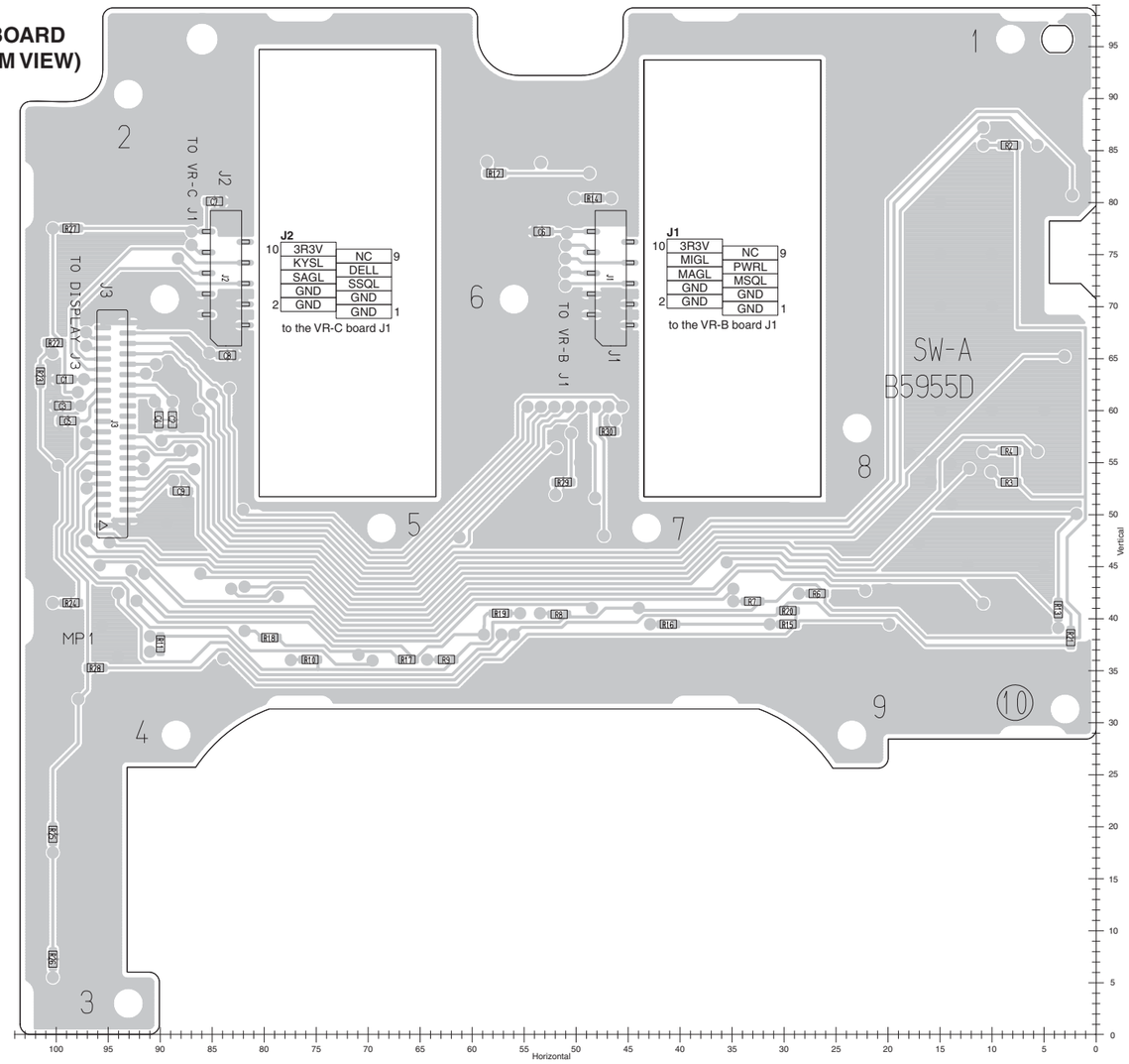


**J3**

| | | | |
|---|---|---|---|
| 29 | GND | GND | 30 |
| | MSQL | 3R3V | |
| | PWRL | MAGL | |
| | SSQL | MIGL | |
| | DELL | SAGL | |
| | KI11 | KYSL | |
| | KI9 | KI10 | |
| | KI7 | KI8 | |
| | NC | NC | |
| | NC | NC | |
| | MOND | NC | |
| | TRAK | PWRK | |
| | SNRD | SNBD | |
| | MNBD | SAGD | |
| | MAGD | MNRD | |
| | TN2D | TMD | |
| | VOXD | TN1D | |
| | STBD | PWRD | |
| | NC | LDPS | |
| 1 | GND | GND | 2 |

to the DISPLAY board J3

**J2**

| | | | |
|---|---|---|---|
| 10 | 3R3V | NC | 9 |
| | KYSL | DELL | |
| | SAGL | SSQL | |
| | GND | GND | |
| 2 | GND | GND | 1 |

to the VR-C board J1

**J1**

| | | | |
|---|---|---|---|
| 10 | 3R3V | NC | 9 |
| | MIGL | PWRL | |
| | MAGL | MSQL | |
| | GND | GND | |
| 2 | GND | GND | 1 |

to the VR-B board J1

## • SW-B BOARD (BOTTOM VIEW)

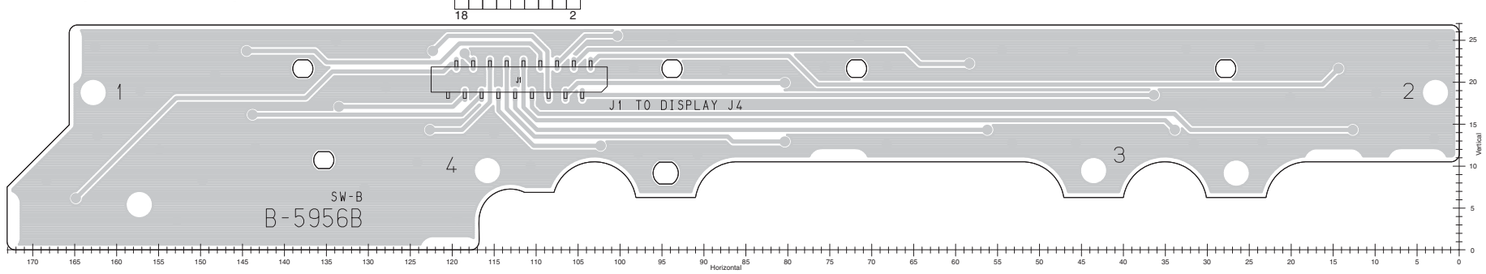


**J1**

| | | | |
|---|---|---|---|
| 17 | MATK | F1K | 1 |
| | RECK | F3K | |
| | MSCK | F5K | |
| | ANK | F7K | |
| | CWK | F2K | |
| | F7K | F4K | |
| | F5K | F6K | |
| | F3K | SSBK | |
| | F1K | RTYK | |
| | F2K | DATK | |
| | F4K | EXTK | |
| | F6K | PLYK | |
| 18 | SSBK | GND | 2 |

to the LOGIC board J4

The combination of top side and bottom side of this page shows the actual configuration of P.C. board.

## • VR-A BOARD (TOP VIEW)

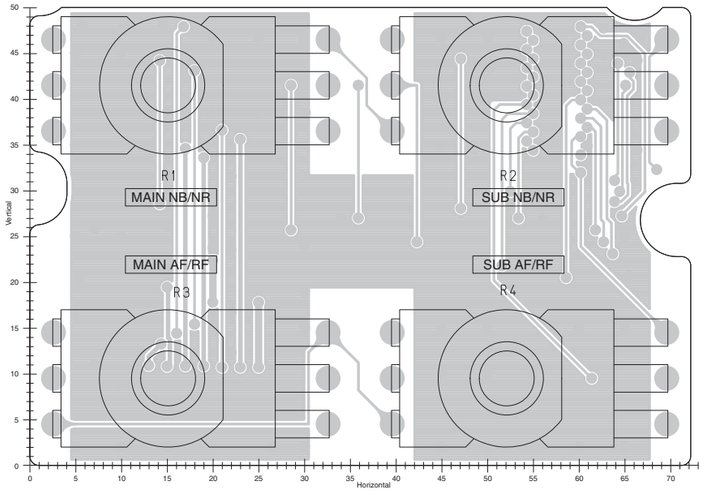


## • VR-B BOARD (TOP VIEW)

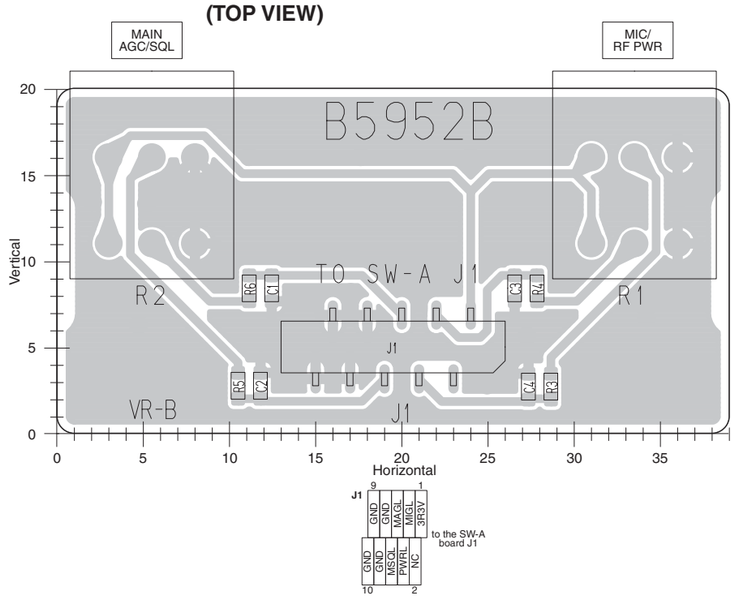


## • VR-C BOARD (TOP VIEW)

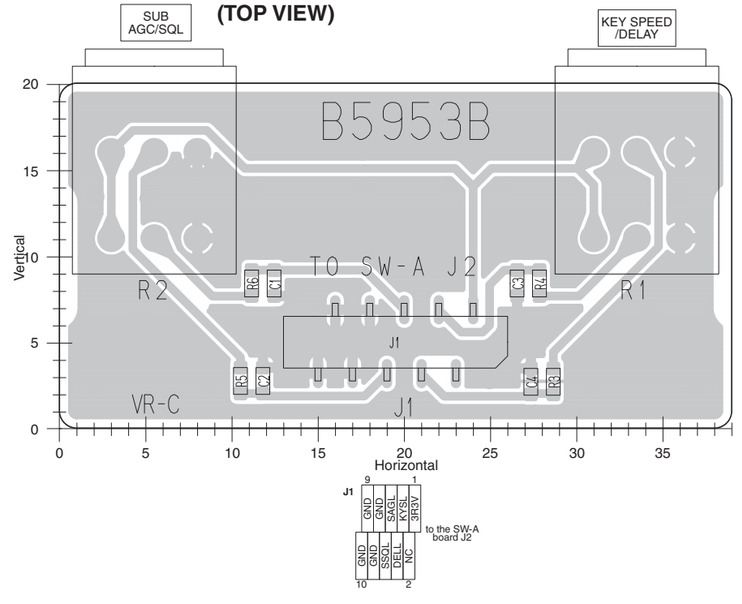


## • VR-D BOARD (TOP VIEW)

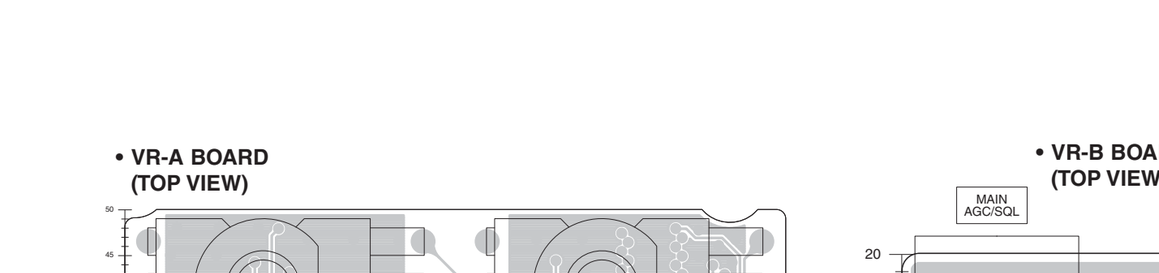


## • JACK BOARD (TOP VIEW)

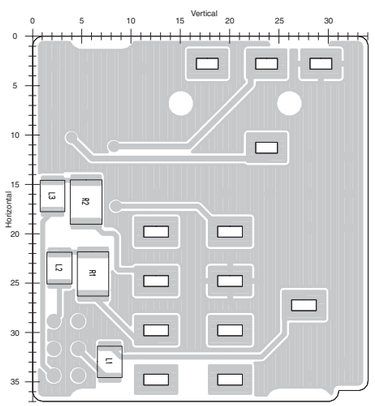


## • MIC BOARD (TOP VIEW)

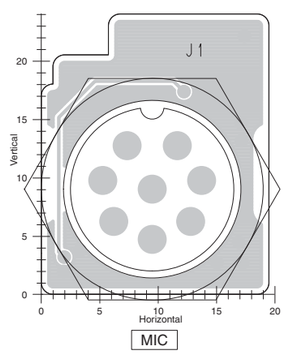


## • CF BOARD (TOP VIEW)

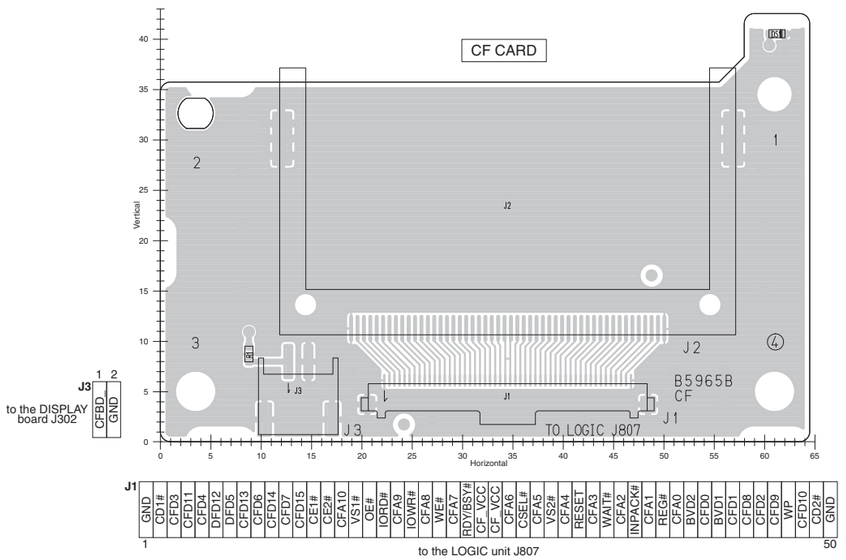

The combination of top side and bottom side of this page shows the actual configuration of P.C. board.

## • VR-C BOARD (BOTTOM VIEW)

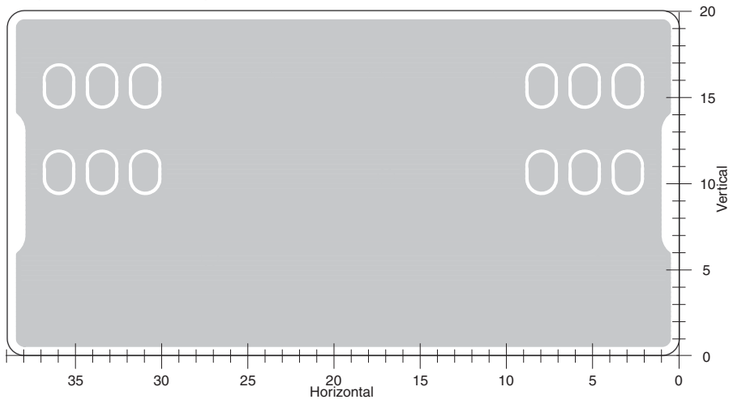


## • VR-B BOARD (BOTTOM VIEW)

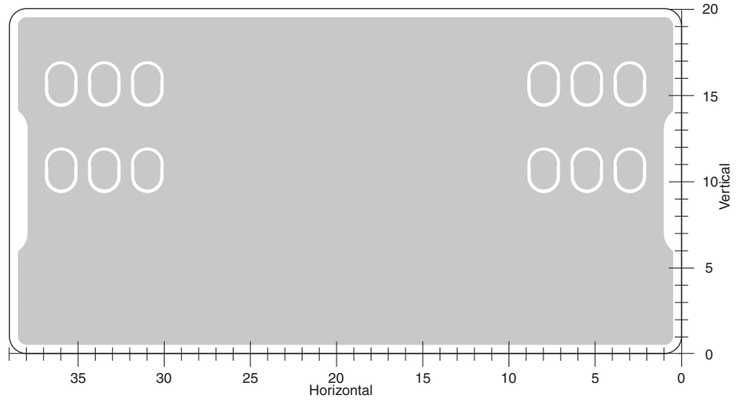


## • VR-A BOARD (BOTTOM VIEW)

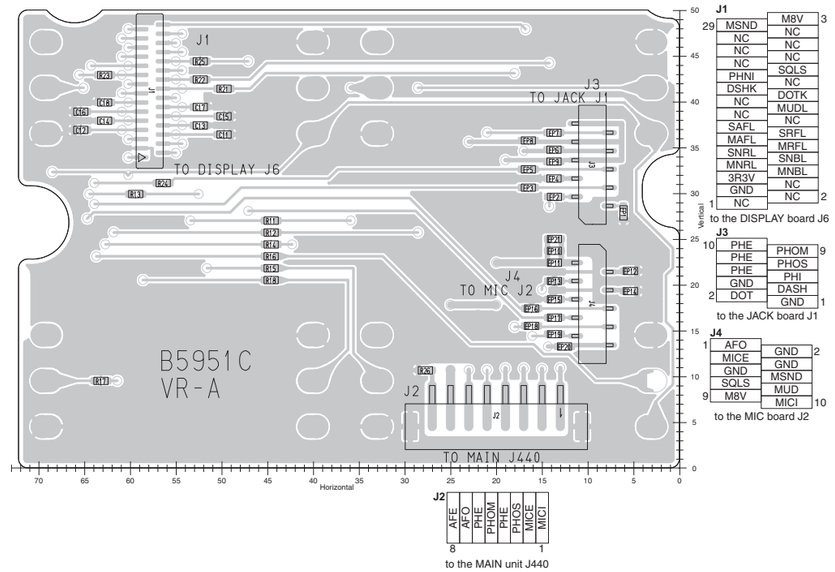


## • VR-D BOARD (BOTTOM VIEW)

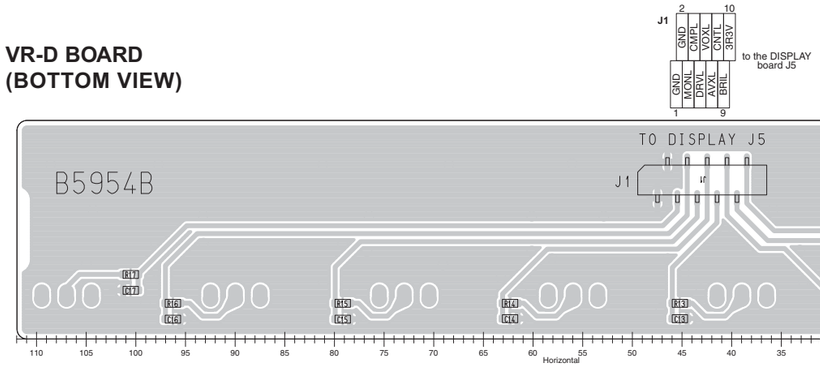


## • CF BOARD (BOTTOM VIEW)

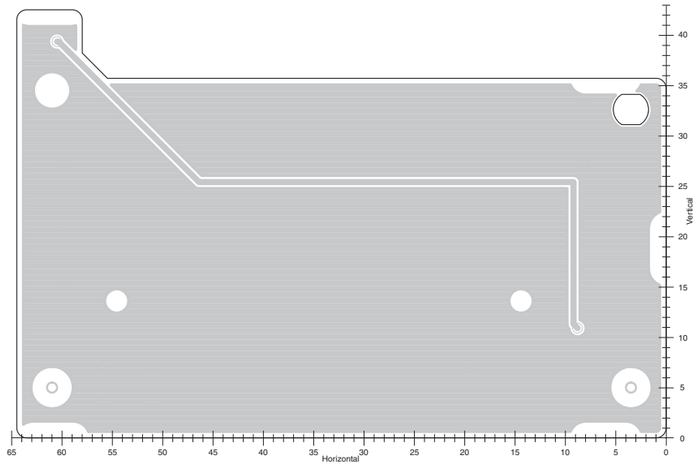


## • MIC BOARD (BOTTOM VIEW)

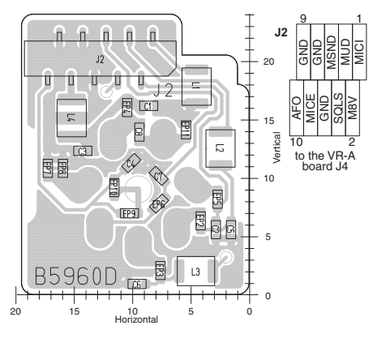


## • JACK BOARD (BOTTOM VIEW)

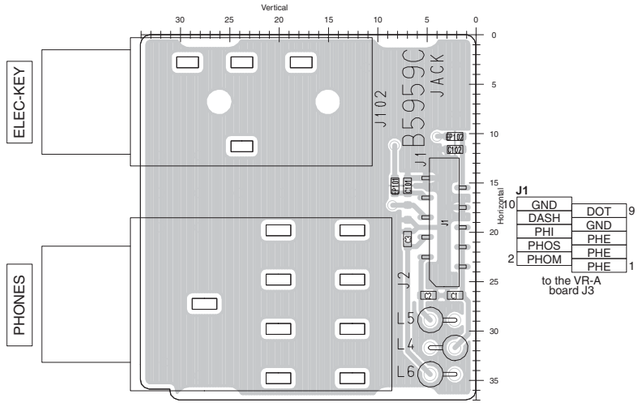

The combination of top side and bottom side of this page shows the actual configuration of P.C. board.

## • TENKEY BOARD (TOP VIEW)

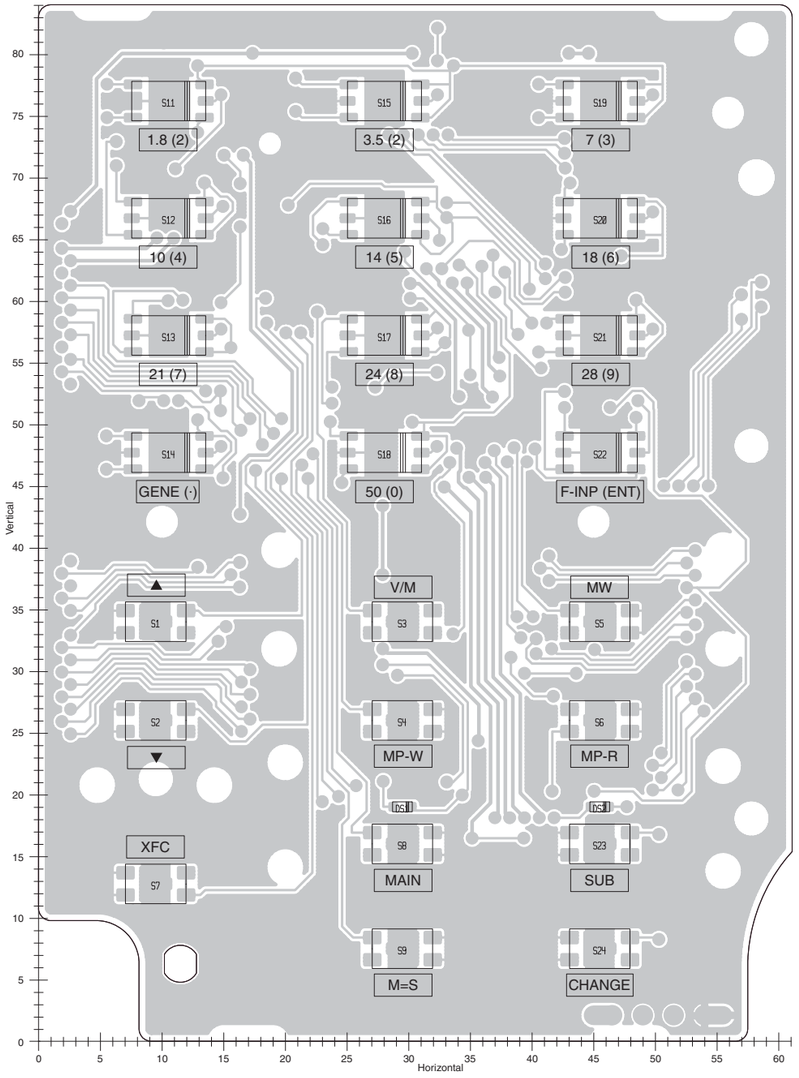


## • PBT1 BOARD (TOP VIEW)

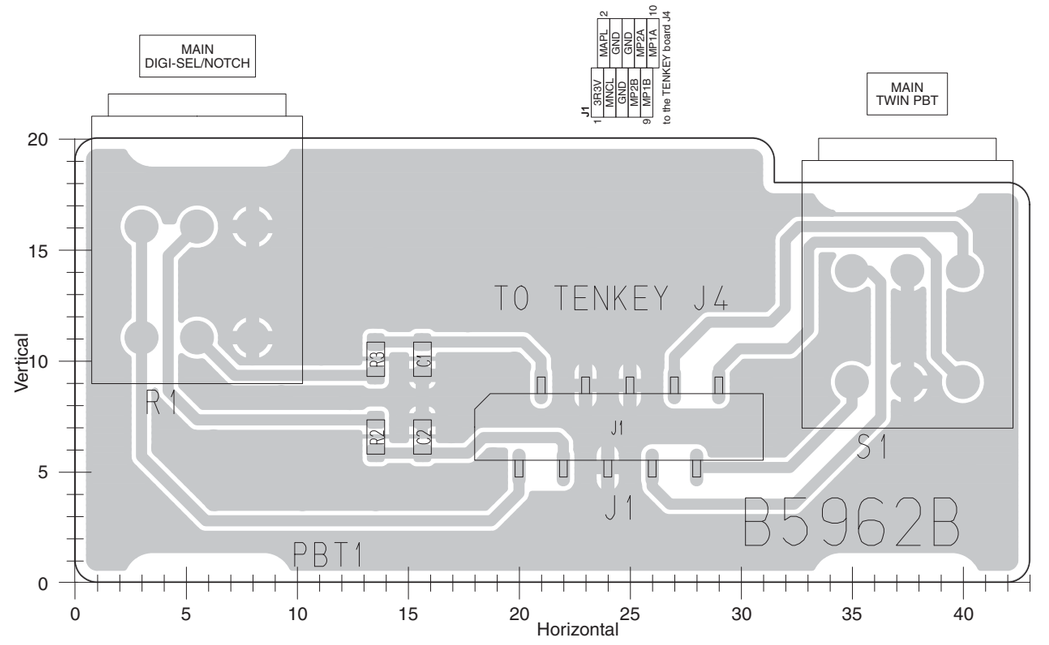


## • PBT2 BOARD (TOP VIEW)

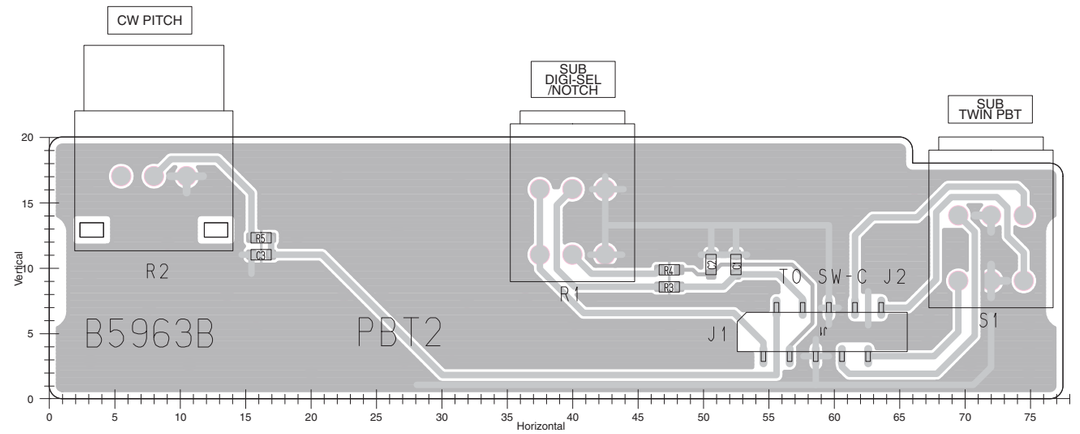


## • LED BOARD (TOP VIEW)

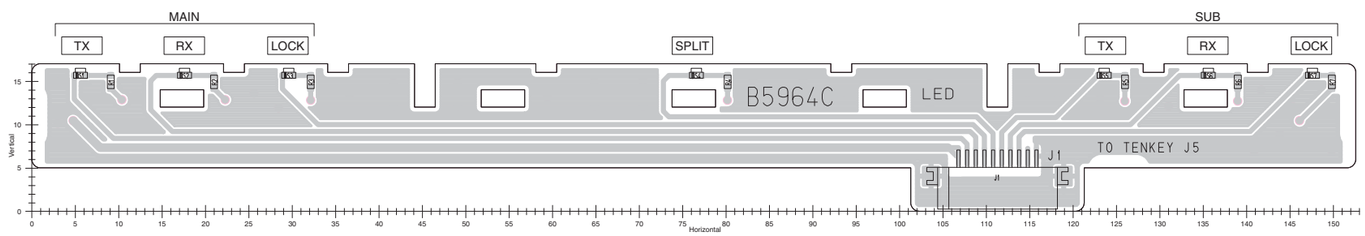


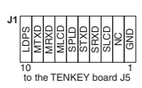


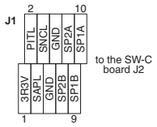

The combination of top side and bottom side of this page shows the actual configuration of P.C. board.

## • PBT1 BOARD (BOTTOM VIEW)

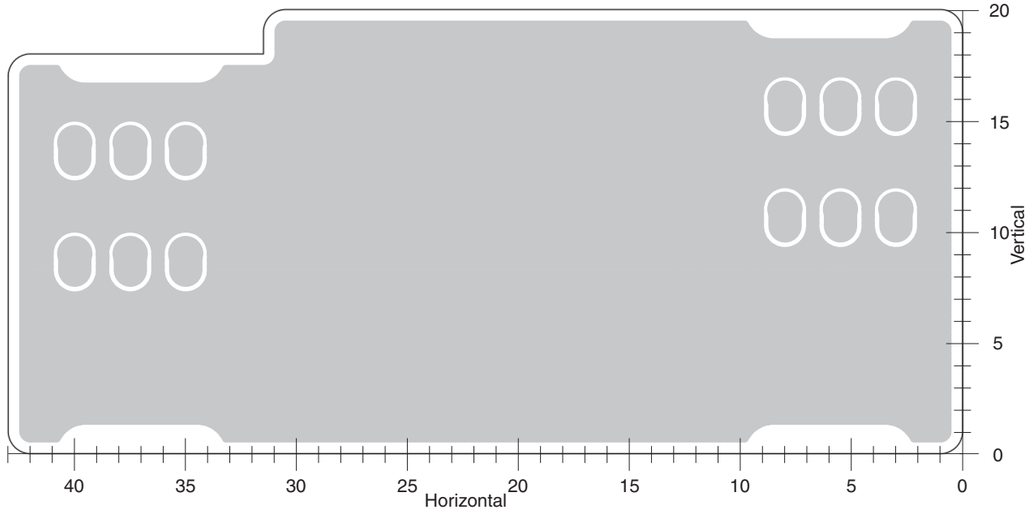


## • PBT2 BOARD (BOTTOM VIEW)

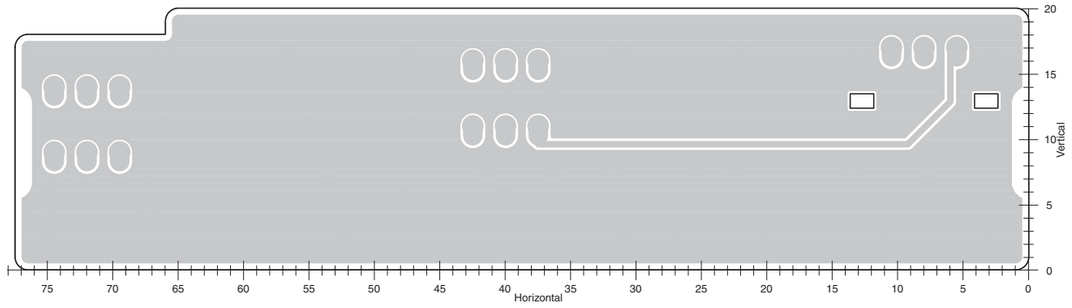


## • TENKEY BOARD (BOTTOM VIEW)

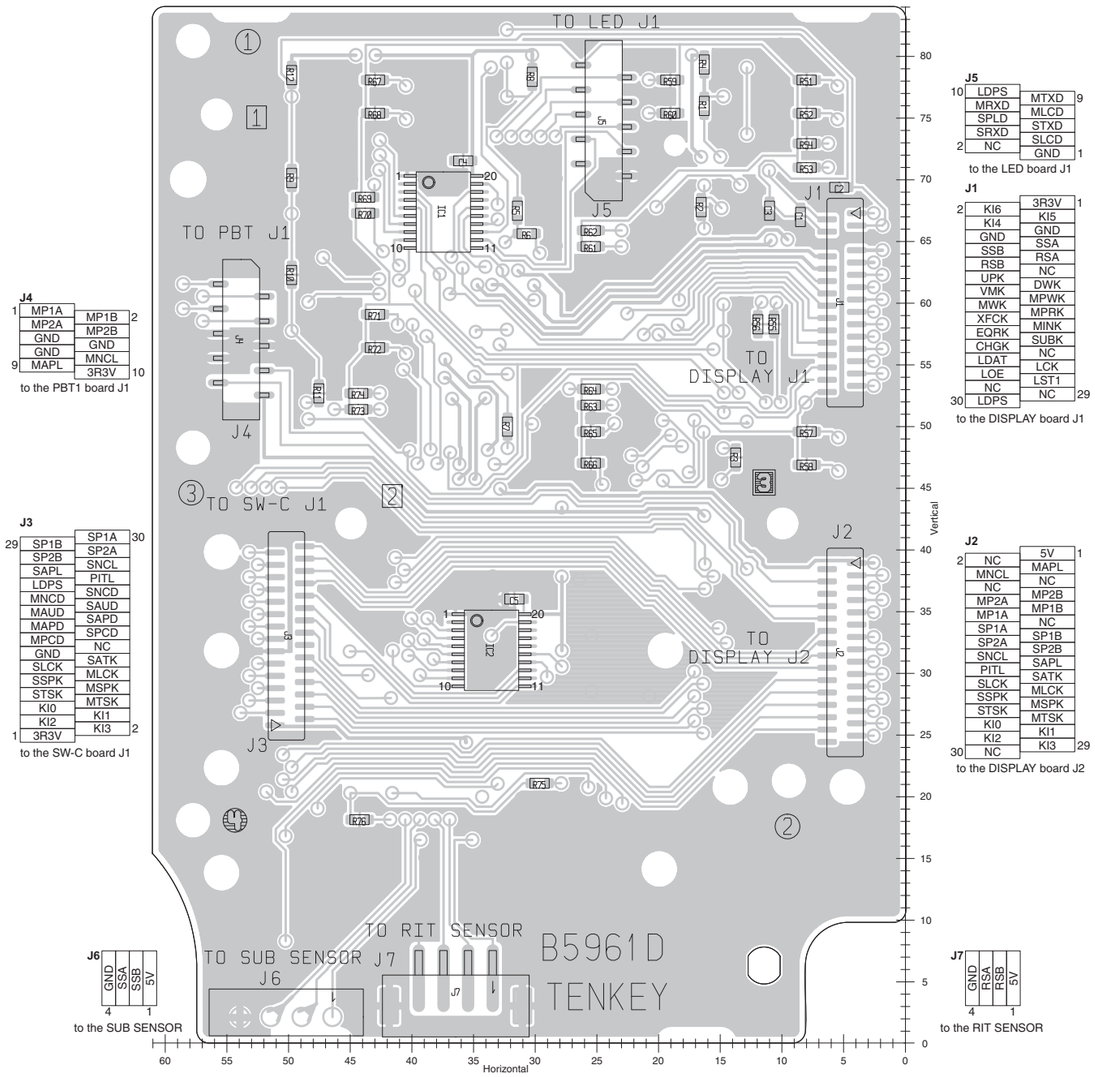


**J4**

| | | |
|---|---|---|
| 1 | MP1A | MP1B 2 |
| | MP2A | MP2B |
| | GND | GND |
| | GND | MNCL |
| 9 | MAPL | 3R3V 10 |

to the PBT1 board J1

**J3**

| | | |
|---|---|---|
| 29 | SP1B | SP1A 30 |
| | SP2B | SP2A |
| | SAPL | SNCL |
| | LDPS | PITL |
| | MNCD | SNCD |
| | MAUD | SAUD |
| | MAPD | SAPD |
| | MPCD | SPCD |
| | GND | NC |
| | SLCK | SATK |
| | SSPK | MLCK |
| | STSK | MSPK |
| | KI0 | MTSK |
| | KI2 | KI1 |
| 1 | 3R3V | KI3 2 |

to the SW-C board J1

**J5**

| | | |
|---|---|---|
| 10 | LDPS | MTXD 9 |
| | MRXD | MLCD |
| | SPLD | STXD |
| | SRXD | SLCD |
| 2 | NC | GND 1 |

to the LED board J1

**J1**

| | | |
|---|---|---|
| 2 | KI6 | 3R3V 1 |
| | KI4 | KI5 |
| | GND | GND |
| | SSB | SSA |
| | RSB | RSA |
| | UPK | NC |
| | VMK | DWK |
| | MWK | MPWK |
| | XFCK | MPRK |
| | EQRK | MINK |
| | CHGK | SUBK |
| | LDAT | NC |
| | LOE | LCK |
| | NC | LST1 |
| 30 | LDPS | NC 29 |

to the DISPLAY board J1

**J2**

| | | |
|---|---|---|
| 2 | NC | 5V 1 |
| | MNCL | MAPL |
| | NC | NC |
| | MP2A | MP2B |
| | MP1A | MP1B |
| | SP1A | NC |
| | SP2A | SP1B |
| | SNCL | SP2B |
| | PITL | SAPL |
| | SLCK | SATK |
| | SSPK | MLCK |
| | STSK | MSPK |
| | KI0 | MTSK |
| | KI2 | KI1 |
| 30 | NC | KI3 29 |

to the DISPLAY board J2

**J6**

| GND | SSA | SSB | 5V |
|---|---|---|---|
| 4 | | | 1 |

to the SUB SENSOR

**J7**

| GND | RSA | RSB | 5V |
|---|---|---|---|
| 4 | | | 1 |

to the RIT SENSOR

## • LED BOARD (BOTTOM VIEW)

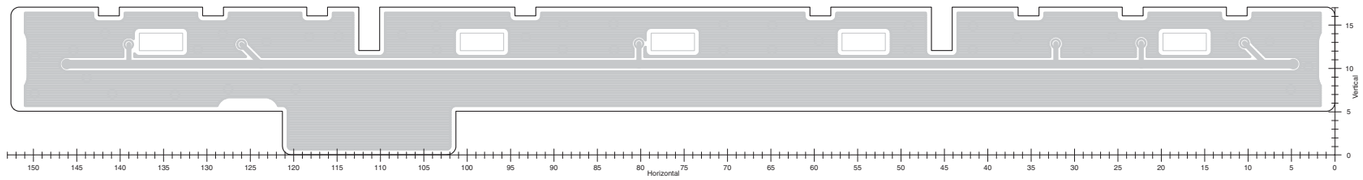

## • LOGIC UNIT (TOP VIEW)

**The combination of top side and bottom side of this page sho s the actua configurat on of P.C. board.**

**J812**

| | | | | | | | | | | | |
|---|---|---|---|---|---|---|---|---|---|---|---|
| | GND | BPCKA | BPSTA | BPDAT | BPOE | BPSTB | NC | +15V | +3R3V | T8V | MR8V | GND |

12 — to the BPF unit J1 — 1

**J824**

| | |
|---|---|
| FANG | FAN |

2 1 — to the PA unit MF1

**J823**

| | |
|---|---|
| SPE | SPO |

1 2 — to the CHASSIS unit SP1

**J1**

| | | |
|---|---|---|
| 1 | +3R3V | +3R3V | 30 |
| | +3R3V | A22 | |
| | A21 | A20 | |
| | A19 | A18 | |
| | A17 | A16 | |
| | A15 | A14 | |
| | A13 | A12 | |
| | A11 | A10 | |
| | A9 | A8 | |
| | A7 | A6 | |
| | A5 | A4 | |
| | A3 | A2 | |
| | A1 | A0 | |
| | A23 | GND | |
| 15 | GND | GND | 16 |

to the MEMORY board J1

**J2**

| | | | |
|---|---|---|---|
| 1 | +3R3V | +3R3V | 40 |
| | CE01 | +3R3V | |
| | CE00 | CE11 | |
| | CE02 | CE10 | |
| | CE21 | CE12 | |
| | CE20 | CE31 | |
| | CE22 | CE30 | |
| | VPEN | CE32 | |
| | RP# | WE# | |
| | OE# | STS | |
| | D15 | D7 | |
| | D14 | D6 | |
| | D13 | D5 | |
| | D12 | D4 | |
| | D11 | D3 | |
| | D10 | D2 | |
| | D9 | D1 | |
| | D8 | D0 | |
| | GND | BYTE# | |
| 20 | GND | GND | 21 |

to the MEMORY board J2

**J820**

| | | | | | | | | | |
|---|---|---|---|---|---|---|---|---|---|
| | LG_PWR | GND | −12V | +15V | +15V | +8V | +5V | +3R3V | GND |

1 — to the DC-DC unit J4 — 10

**J821**

| | | | | | |
|---|---|---|---|---|---|
| | GND | VDD1R5 | VDD3R3 | VDD5 | PWRS | C15V | GND |

1 — to the DC-DC unit J3 — 7

**J805**

| | | | | | | | | | | | | | | | | | | | | |
|---|---|---|---|---|---|---|---|---|---|---|---|---|---|---|---|---|---|---|---|---|
| | VDD5VF | NC | GND | MSWD | +3V | NC | C15V | C15V | C15V | GND | GND | +3R3C | LG_RES | NC | LG_PWR | NC | LTXD | LRXD | GND | GND |

20 — to the DISPLAY board J203 — 1

**J809**

| | | | | | | | | | | | | | | | | | | | | |
|---|---|---|---|---|---|---|---|---|---|---|---|---|---|---|---|---|---|---|---|---|
| 1 | EXRL1 | EXRL2 | TRVI | RTKI | SENI | SEND | ASND | T8V | MR8V | SR8V | RSTBB | RSTBA | ASTB2 | ASTB1 | MSTB2 | MSTB1 | MCKX | MDAT | VOXAFE | OVFE | 39 |
| | FORV | REFV | FANV | IDL | VDL | ALCL | THMM | SQLAM | SQLAS | SQLAS | SQLS | GND | DULSA | DULSB | KEY | GND | LED1 | LED0 | VOXAF | CIV | |
| 2 | | | | | | | | | | | | | | | | | | | | | 40 |

to the MAIN unit J900

**J808**

| | | | | | | | | | | | | | | | | | | | | |
|---|---|---|---|---|---|---|---|---|---|---|---|---|---|---|---|---|---|---|---|---|
| 1 | DSPK | DSPR | DFRA | DFXA | DX1A | NSOA | VSOA | RTDA | TNDA | DFRB | DX1B | NSOB | VSOB | RTDB | TNDB | SYNCIO | METM | METS | GND | | 39 |
| | SCK | SDAT | SST1 | SPSO | SST2 | GND | DFXS | DFRS | NC | RXTS | DRES | FRWT | DFRT | DX1T | DFXT | DVOX | DAVOX | OSKY | CLS | EPAD | MUTEI | |
| 2 | | | | | | | | | | | | | | | | | | | | | 40 |

to the MAIN unit J900

**J813**

| | | | | | | | | | | | | | | | | | | | | |
|---|---|---|---|---|---|---|---|---|---|---|---|---|---|---|---|---|---|---|---|---|
| | NC | DRESH | DSDAA | DCK | DSONA | DSCLB | DSTBB | DSAPB | +15V | GND | 19 | 1 |
| | GND | +3R3V | DSCLA | DDAT | DSTBA | DSAPA | DSDAB | DSONB | +15V | NC | 20 | 2 |

to the DIGISEL unit J10

**J811**

| | | | |
|---|---|---|---|
| 1 | GND | GNDL | 2 |
| | IKEY | ISTA | |
| | GNDL | TDRS | |
| | GND | TCK | |
| | TDAT | CSTB | |
| | FSTB | TOE | |
| | GND | REFV | |
| | FORV | T8V | |
| | +3R3V | −12V | |
| | GND | GND | |
| | GND | +15V | |
| 23 | +15V | +15V | 24 |

to the CTRL board J1

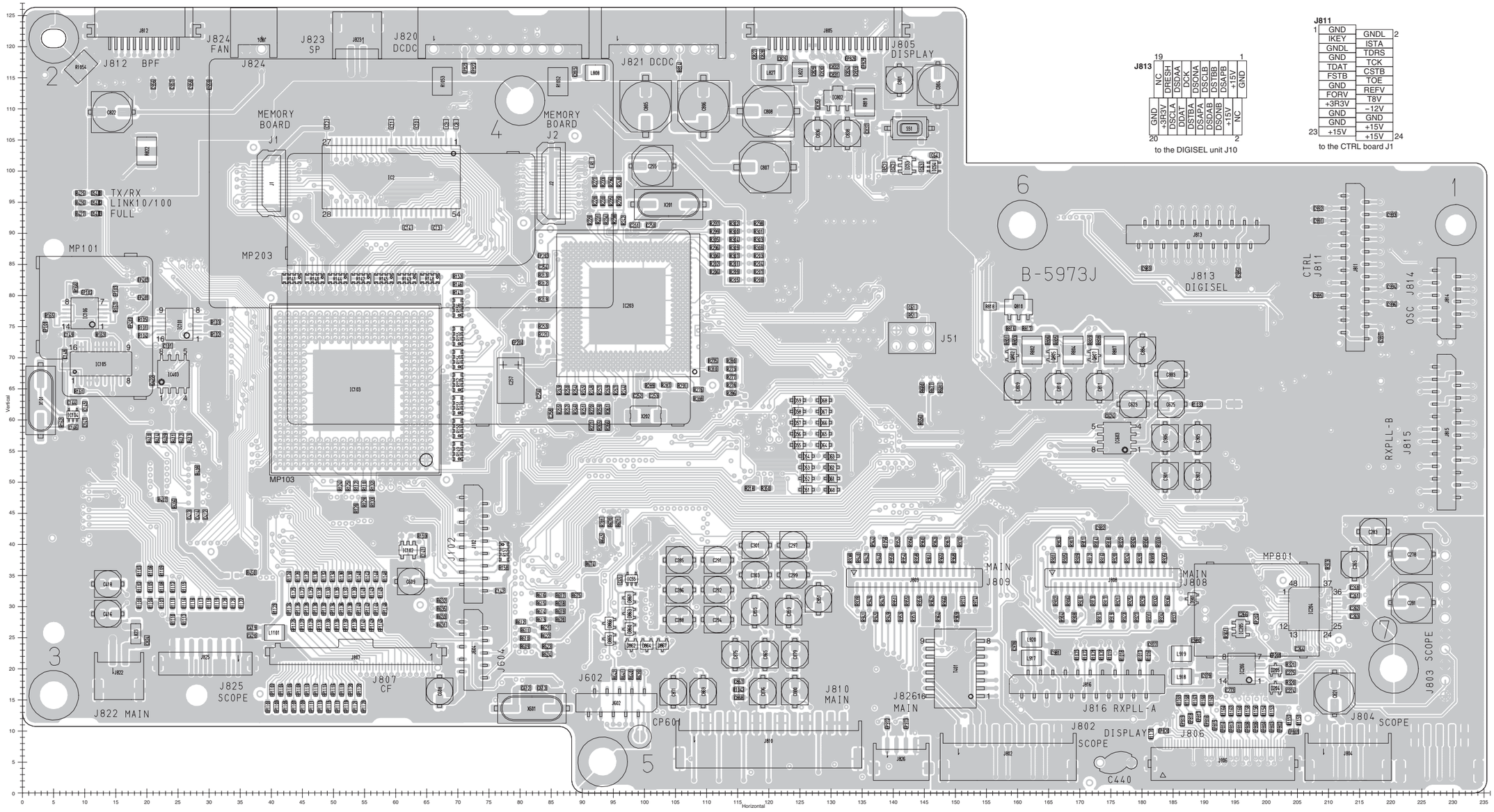


**J814**

| | | | |
|---|---|---|---|
| 10 | GND | OCK | 9 |
| | ODAT | OCS | |
| | OSS2 | OSS1 | |
| | P+8V | P+15V | |
| 2 | P+15V | GND | 1 |

to the OSC unit J2

**J815**

| | | | |
|---|---|---|---|
| 1 | GND | P+15V | 2 |
| | P+15V | R8V | |
| | T8V | P+5V | |
| | P+5V | GND | |
| | GND | PSLB | |
| | PSTB | C2B2 | |
| | C2B1 | GND | |
| | GND | PCKB | |
| | PDATB | GND | |
| | GND | DRES | |
| 21 | UNLKB | GND | 22 |

to the RXPLL-B unit J2

**J803**

| | |
|---|---|
| GND | 1 |
| RED | |
| RGND | |
| GREEN | |
| GGND | |
| BLUE | |
| BGND | |
| HC | |
| SGND | |
| VSYNC | |
| GND | 11 |

to the SCOPE unit J909

**J804**

| | | | | |
|---|---|---|---|---|
| GND | VBUS1 | D−1 | D+1 | GND |

1 5 — to the SCOPE unit J908

**J822**

| | |
|---|---|
| SPO | SPE |

1 2 — to the MAIN unit J142

**J825**

| | | | | | | | |
|---|---|---|---|---|---|---|---|
| GND | GND | MRXD2# | MTXD2 | CISEL | GND | MRXD1# | MTXD1 |

8 — to the SCOPE unit J910 — 1

**J807**

| | | | | | | | | | | | | | | | | | | | | |
|---|---|---|---|---|---|---|---|---|---|---|---|---|---|---|---|---|---|---|---|---|
| GND | CD1# | CFD3 | CFD11 | CFD4 | CFD12 | CFD5 | CFD13 | CFD6 | CFD14 | CFD7 | CFD15 | CE1# | CE2# | CFA10 | VS1# | OE# | IORD# | CFA9 | IOWR# | CFA8 |
| WE# | CFA7 | RDY/BSY# | CF_VCC | CF_VCC | CFA6 | CSEL# | CFA5 | VS2# | RESET | CFA3 | WAIT# | CFA2 | INPACK# | CFA1 | REG# | CFA0 | BVD2 | CFD0 | BVD1 | CFD1 |
| CFD8 | CFD2 | CFD9 | WP | CFD10 | CD2# | GND | | | | | | | | | | | | | | |

50 — to the CF board J1 — 1

**J810**

| | | | | | | | | | | | | | |
|---|---|---|---|---|---|---|---|---|---|---|---|---|---|
| RXMIREC | RXMRECE | RXSREC | RXSRECE | MPLAYE | MPLAYE | SPLAYE | SPLAYE | MICREC | MICRECE | MICPLAYE | MICPLAYE | GND |

1 — to the MAIN unit J451 — 13

**J826**

| | | | |
|---|---|---|---|
| SPDO | GND | SPDI | GND |

1 — to the MAIN unit J901 — 4

**J802**

| | | | | | | | |
|---|---|---|---|---|---|---|---|
| TX+ | TX− | RX+ | NC | NC | RX− | NC | NC | GND |

1 — to the SCOPE unit J907 — 9

**J816**

| | | | | | | | | | | | | | | | | | | | | |
|---|---|---|---|---|---|---|---|---|---|---|---|---|---|---|---|---|---|---|---|---|
| | | | | | | | | | | | | | | | | | | | 2 | 22 |
| | P+15V | R8V | P+5V | GND | PSLA | C2A2 | GND | PCKA | GND | DRES | GND | | | | | | | | | |
| | GND | P+15V | T8V | P+5V | GND | PSTA | C2A1 | GND | PDATA | GND | UNLKA | | | | | | | | | |
| 1 | | | | | | | | | | | | | | | | | | | | 21 |

to the RXPLL-A unit J2

**J806**

| | | | | | | | | | | | | | | | | | | | | |
|---|---|---|---|---|---|---|---|---|---|---|---|---|---|---|---|---|---|---|---|---|
| LVDD1 | LVDD2 | LVDD3 | LVDD4 | GND | NC | NC | GND | UD/RL | DE | VS | HS | GND | B5 | B4 | B3 | GND | B2 | B1 | B0 | GND |
| G5 | G4 | G3 | GND | G2 | G1 | G0 | GND | R5 | R4 | R3 | GND | R2 | R1 | R0 | GND | LCLK | GND | | | |

1 — to the DISPLAY board J202 — 40

• **LOGIC UNIT**
**(BOTTOM VIEW)**

The combination of top side and bottom side of this page sho s the actua configurat on of P.C. board.

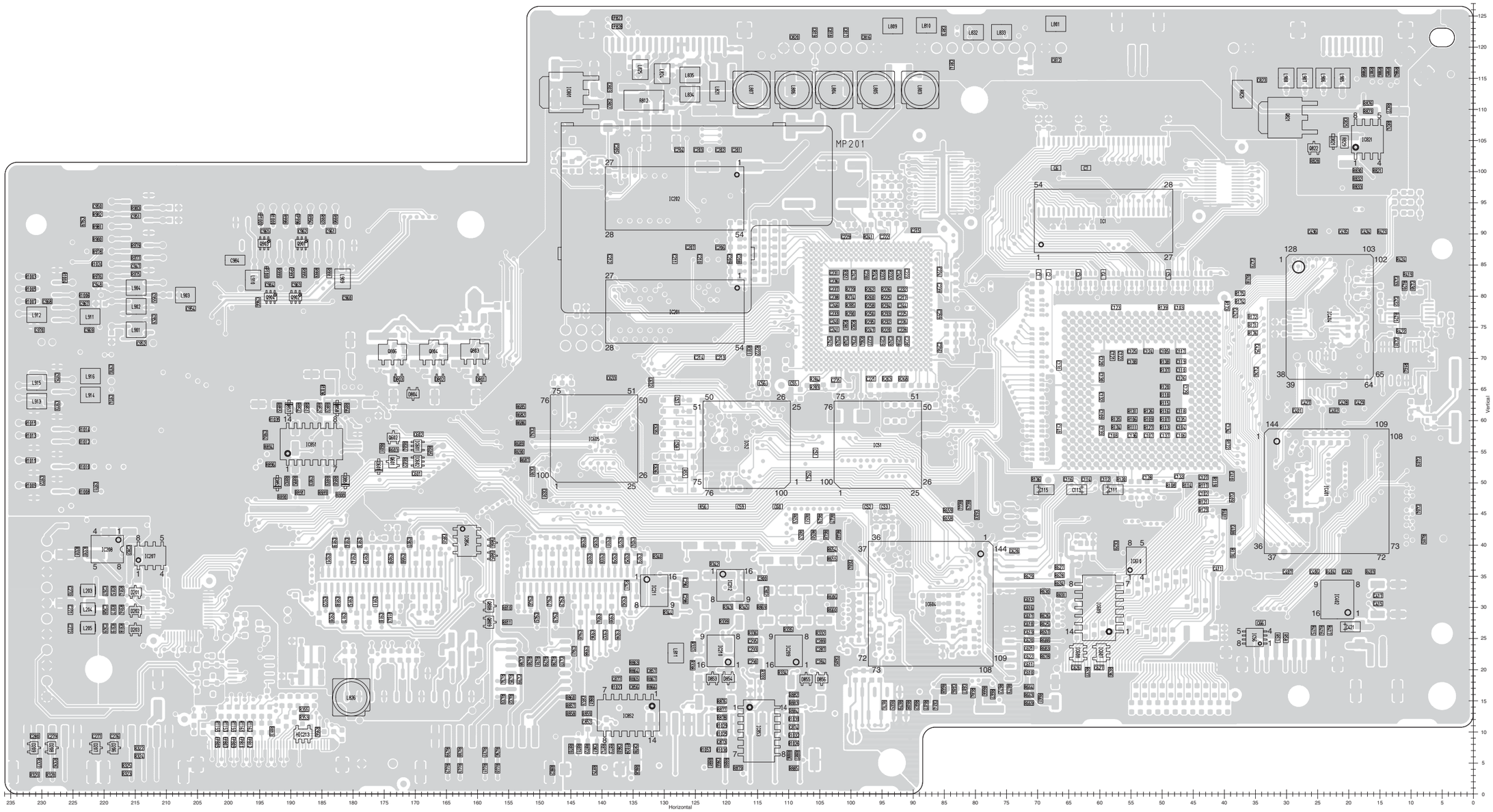

• **MEMORY BOARD**
**(TOP VIEW)**

The combination of top side and bottom side of this page sho s the actua configurat on of P.C. board.

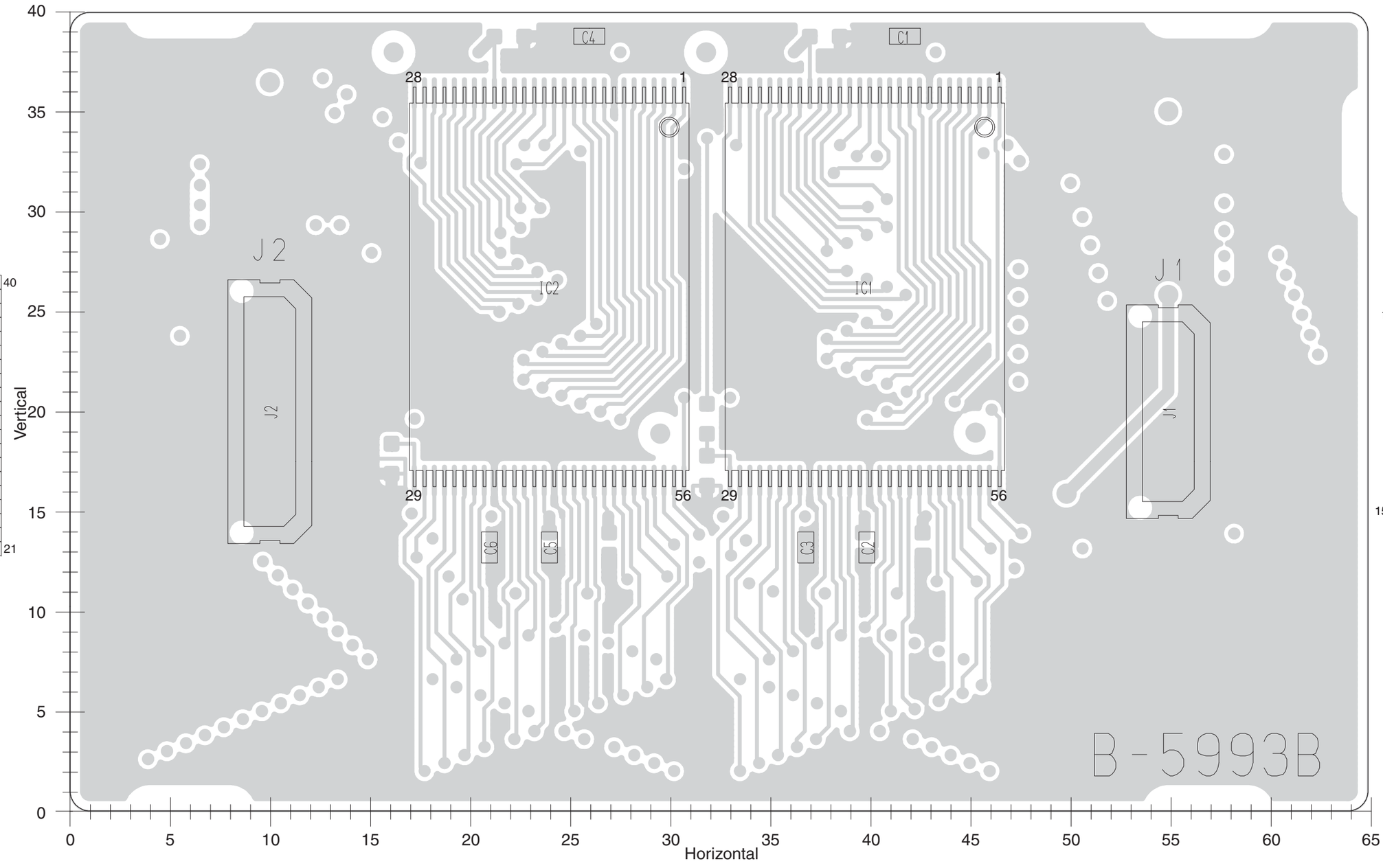


**J2**

| | | | |
|---|---|---|---|
| 1 | +3R3V | +3R3V | 40 |
| | CE01 | +3R3V | |
| | CE00 | CE11 | |
| | CE02 | CE10 | |
| | CE21 | CE12 | |
| | CE20 | CE31 | |
| | CE22 | CE30 | |
| | VPEN | CE32 | |
| | RP# | WE# | |
| | OE# | STS | |
| | D15 | D7 | |
| | D14 | D6 | |
| | D13 | D5 | |
| | D12 | D4 | |
| | D11 | D3 | |
| | D10 | D2 | |
| | D9 | D1 | |
| | D8 | D0 | |
| | GND | BYTE# | |
| 20 | GND | GND | 21 |

to the LOGIC unit J2

**J1**

| | | | |
|---|---|---|---|
| 1 | +3R3V | +3R3V | 30 |
| | +3R3V | A22 | |
| | A21 | A20 | |
| | A19 | A18 | |
| | A17 | A16 | |
| | A15 | A14 | |
| | A13 | A12 | |
| | A11 | A10 | |
| | A9 | A8 | |
| | A7 | A6 | |
| | A5 | A4 | |
| | A3 | A2 | |
| | A1 | A0 | |
| | A23 | GND | |
| 15 | GND | GND | 16 |

to the LOGIC unit J1

• **MEMORY BOARD**
**(BOTTOM VIEW)**

The combination of top side and bottom side of this page sho s the actua configurat on of P.C. board.

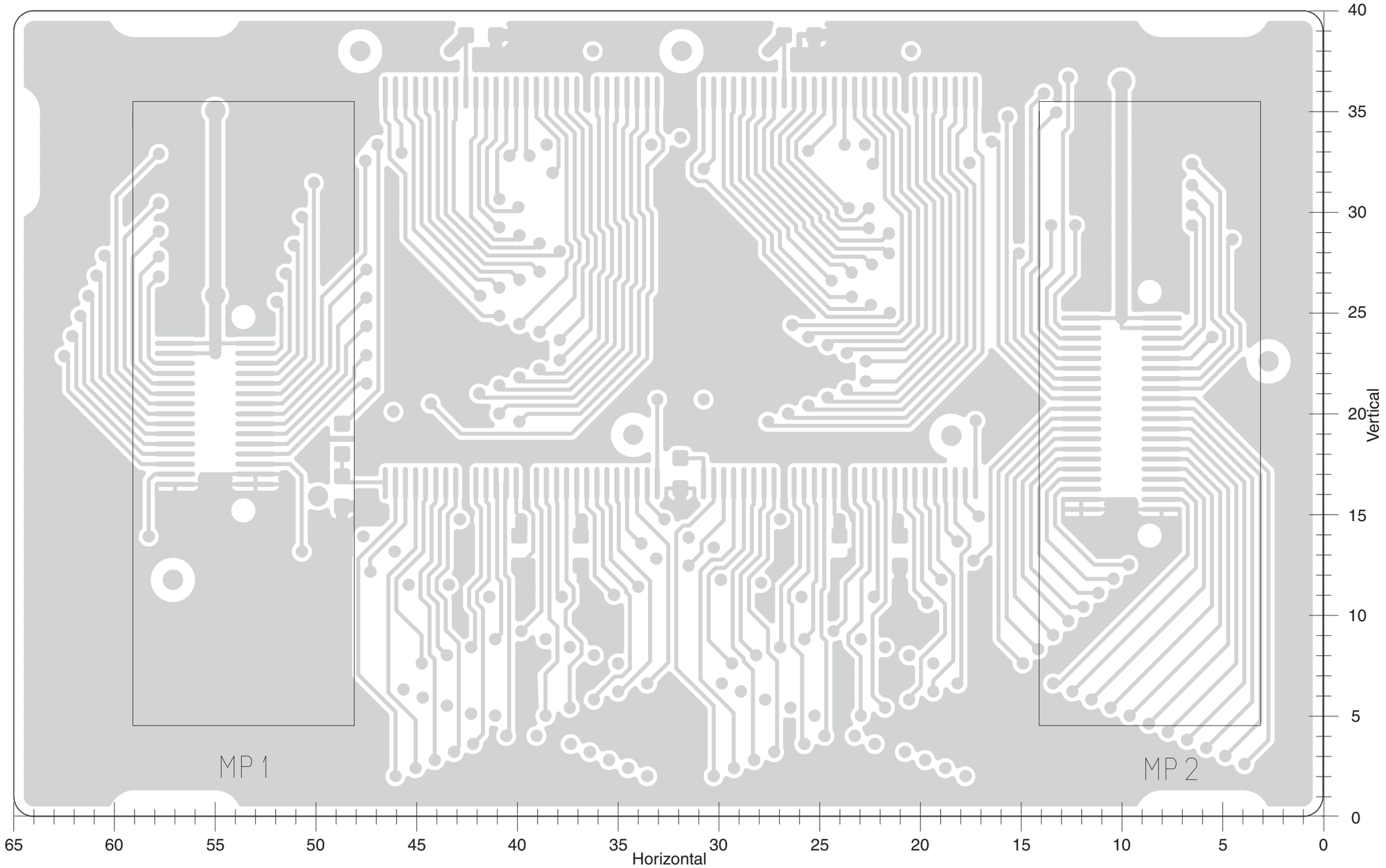

The combination of top side and bottom side of this page shows the actual configuration of P.C. board.

# • MAIN UNIT (TOP VIEW)

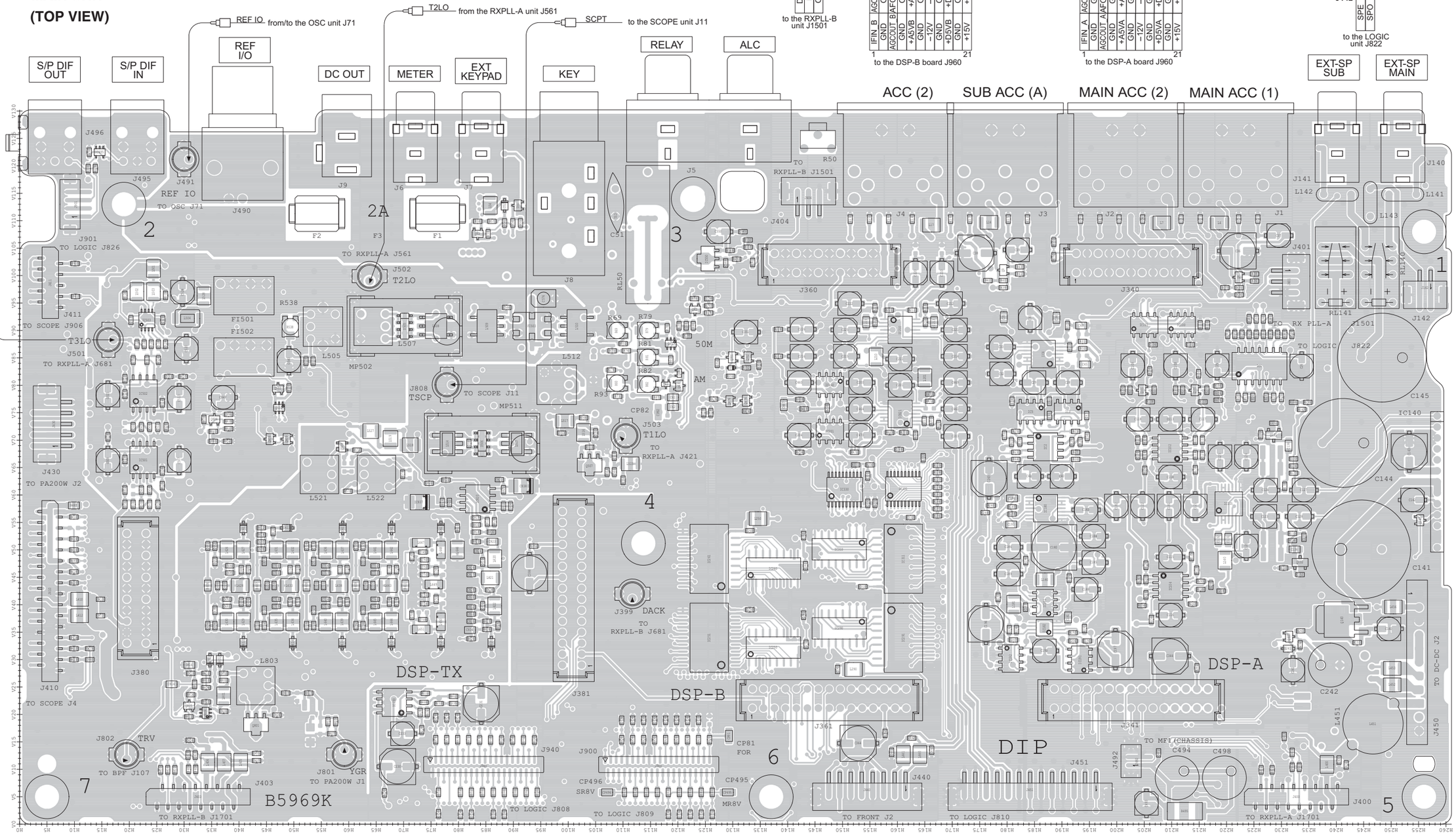


**J901**
| | | |
|---|---|---|
| 4 | GND | |
| | SPDI | |
| | GND | |
| 1 | SPDO | |

to the LOGIC unit J826

**J411**
| | | | |
|---|---|---|---|
| 1 | CIVE | CIV | 2 |
| | CIVE | VDD5 | |
| | CIVE | NC | |
| | CV15V | LED0 | |
| 9 | LED1 | GND | 10 |

to the SCOPE unit J906

**J430**
| | | |
|---|---|---|
| 5 | GND | |
| | PAT8 | |
| | IDL | |
| | IDH | |
| 1 | THML | |

to the PA200W board J2

**J410**
| | | | |
|---|---|---|---|
| 1 | DGND | DRES | 2 |
| | DSPCK | SDR1 | |
| | DFXS | DFRS | |
| | DXIS | FRWT | |
| | SYNCIO | DGND | |
| | SDAT | SCK | |
| | SST1 | SPSO | |
| | SST2 | AGND | |
| | +3R3V | +3R3V | |
| | −12V | +3R3V | |
| | +5V | AGND | |
| | AGND | AGND | |
| | +8V | T8V | |
| | SATT | SMUT | |
| 29 | SSA | SSB | |
| | | AGND | 30 |

to the SCOPE unit J4

**J381**
| | | | |
|---|---|---|---|
| 30 | GND1T | GND1T | 29 |
| | GND1T | GND1T | |
| | D1R2V_SENS_T | D1R2C_T | |
| | D1R2V_T | D1R2V_T | |
| | GND1T | GND1T | |
| | D3R3V | D3R3V | |
| | GND1T | GND1T | |
| | FRWT | DFXT | |
| | DVOX | DX1T | |
| | DAVOX | DSPCK | |
| | CTFL | DFRT | |
| | DSKY | DSPR | |
| | DRES | DSPCK | |
| | GND1T | MCLK | |
| 2 | GND1T | GND1T | 1 |

to the DSP-TX board J961

**J403**
| | | | | | | | |
|---|---|---|---|---|---|---|---|
| 2 | MSTBB | MCK | GND | AGCIB | +3R3V | −12V | +15V | GND 16 |
| GND | MDAT | GND | +8V | AGCOB | NC | NC | +15V | |
| 1 | | | | | | | | 15 |

to the RXPLL-B unit J1701

**J940**
| | | | | | | | | | | | | | | | | | | | | |
|---|---|---|---|---|---|---|---|---|---|---|---|---|---|---|---|---|---|---|---|---|
| 1 | MUTEI | EPAD | CTFL | DSKY | DAVOX | DVOX | DFTX | DXIT | DFRT | FRWT | DRES | RXIS | DFRS | DFXS | GND | SST2 | SPSO | SST1 | SDAT | SCK 39 |
| GND | METS | METM | SYNCIO | TNDB | RTDB | VSQB | NSQB | DFXB | DX1B | DFRB | RTDA | VSQA | NSQA | DX1A | DFXA | DSPR | DSPCK | | | |
| 2 | | | | | | | | | | | | | | | | | | | | 40 |

to the LOGIC unit J808

**J900**
| | | | | | | | | | | | | | | | | | | | | |
|---|---|---|---|---|---|---|---|---|---|---|---|---|---|---|---|---|---|---|---|---|
| 1 | CIV | VOXAF | LED0 | LED1 | GND | KEY | DULSB | DULSA | GND | SQLS | SQLM | SQLAS | SQLAM | THML | ALCL | VDL | IDL | FANV | REFV | FORV 39 |
| CIVE | VOXAFE | MADT | MCK | MSTB1 | MSTB2 | ASTB1 | ASTB2 | RSTBA | RSTBB | SR6V | MR6V | T8V | ASND | SEND | SENI | RTKI | TRVI | EXRL2 | EXRL1 | |
| 2 | | | | | | | | | | | | | | | | | | | | 40 |

to the LOGIC unit J809

**J361**
| | | | | | | | | | | | | | | | | | | | | |
|---|---|---|---|---|---|---|---|---|---|---|---|---|---|---|---|---|---|---|---|---|
| 2 | GND1B | GND1B | DRES | RTDB | NSQB | DULSB | GND1B | TNDB | FRWT | GND1B | D3R3V | GND1B | D1R2V_SENS_B | D1R2V_B | D1R2V_A | GND1B | | | | |
| GND1B | MCLK | DSPCK | DSPR | DFRB | VSQB | DSPCK | DX1B | DFXB | GND1B | D3R3V | GND1B | D1R2V_B | D1R2V_A | GND1B | | | | | | |
| 1 | | | | | | | | | | | | | | | | | | | | 29 |

to the DSP-B board J961

**J440**
| | | | | | | | |
|---|---|---|---|---|---|---|---|
| 8 | AFE | AFO | PHE | PHOM | PHF | PHOS | MICE | MICI 1 |

to the VR-A board J2

**J341**
| | | | | | | | | | | | | | | | | | | | | |
|---|---|---|---|---|---|---|---|---|---|---|---|---|---|---|---|---|---|---|---|---|
| 2 | GND1A | GND1A | DRES | RTDA | NSQL | DULSA | GND1A | TNDA | FRWT | GND1A | D3R3V | GND1A | D1R2V_SENS_A | D1R2V_A | D1R2V_B | GND1A | | | | |
| GND1A | MCLK | DSPCK | DSPR | DFRA | VSQA | DSPCK | DX1A | DFXA | GND1A | D3R3V | GND1A | D1R2V_A | D1R2V_B | GND1A | | | | | | |
| 1 | | | | | | | | | | | | | | | | | | | | 29 |

to the DSP-A board J961

**J451**
| | | | | | | | | | | | | | |
|---|---|---|---|---|---|---|---|---|---|---|---|---|---|
| 13 | GND | MICPLAYE | MICPLAY | MICRECE | MICREC | SPLAYE | SPLAY | MPLAYE | MPLAY | RXSRECE | RXSREC | RXMRECE | RXMREC 1 |

to the LOGIC unit J810

**J492**
| | | |
|---|---|---|
| 2 | DFAN | |
| 1 | GND | |

to the CHASSIS unit MF1

**J400**
| | | | | | | | | |
|---|---|---|---|---|---|---|---|---|
| 2 | RSTBA | MCK | GND | AGCIA | +3R3V | −12V | +15V | GND 16 |
| GND | MDAT | GND | +8V | AGCOA | NC | NC | +15V | |
| 1 | | | | | | | | 15 |

to the RXPLL-A unit J1701

**J450**
| | |
|---|---|
| 1 | GND |
| | VDD5 |
| | GND |
| | +3R3V |
| | +3R3V |
| | +3R3V |
| | +5V |
| | +8V |
| | +15V |
| | +8V |
| | −12V |
| 12 | GND |

to the DC-DC unit J2

**J404**
| | | | |
|---|---|---|---|
| 1 | DIFB | NC | 3 |

to the RXPLL-B unit J1501

**J360**
| | | | | | | | | | | | | | | | | | | | | |
|---|---|---|---|---|---|---|---|---|---|---|---|---|---|---|---|---|---|---|---|---|
| 2 | AGCDET_B | GND | AGCOUT_B | AFOUT_B | GND | +A5VB | GND | −12V | GND | +D5VB | GND | +15V | | | | | | | | |
| IFIN_B | GND | AGCOUT_B | AFOUT_B | GND | +A5VB | GND | −12V | GND | +D5VB | GND | +15V | | | | | | | | | |
| 1 | | | | | | | | | | | | | | | | | | | | 21 |

to the DSP-B board J960

**J340**
| | | | | | | | | | | | | | | | | | | | | |
|---|---|---|---|---|---|---|---|---|---|---|---|---|---|---|---|---|---|---|---|---|
| 2 | AGCDET_A | GND | AGCOUT_A | AFOUT_A | GND | +A5VA | GND | −12V | GND | +D5VA | GND | +15V | | | | | | | | |
| IFIN_A | GND | AGCOUT_A | AFOUT_A | GND | +A5VA | GND | −12V | GND | +D5VA | GND | +15V | | | | | | | | | |
| 1 | | | | | | | | | | | | | | | | | | | | 21 |

to the DSP-A board J960

**J142**
| | | |
|---|---|---|
| 2 | SPE | 1 |
| | SPO | |

to the LOGIC unit J822

The combination of top side and bottom side of this page shows the actual configuration of P.C. board.

• MAIN UNIT
(BOTTOM VIEW)

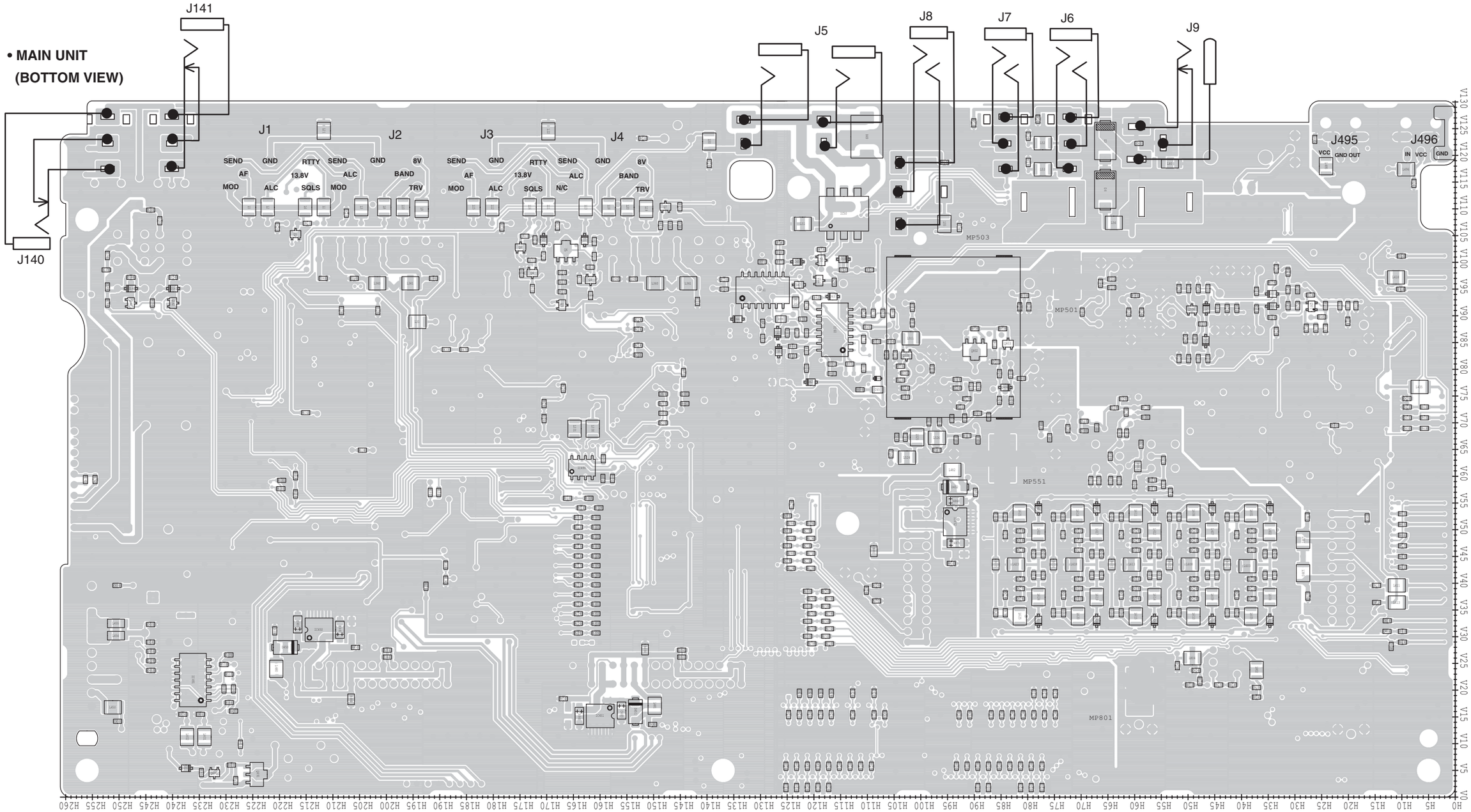

The combination of top side and bottom side of this page shows the actual configuration of P.C. board.

## • SCOPE UNIT (TOP VIEW)

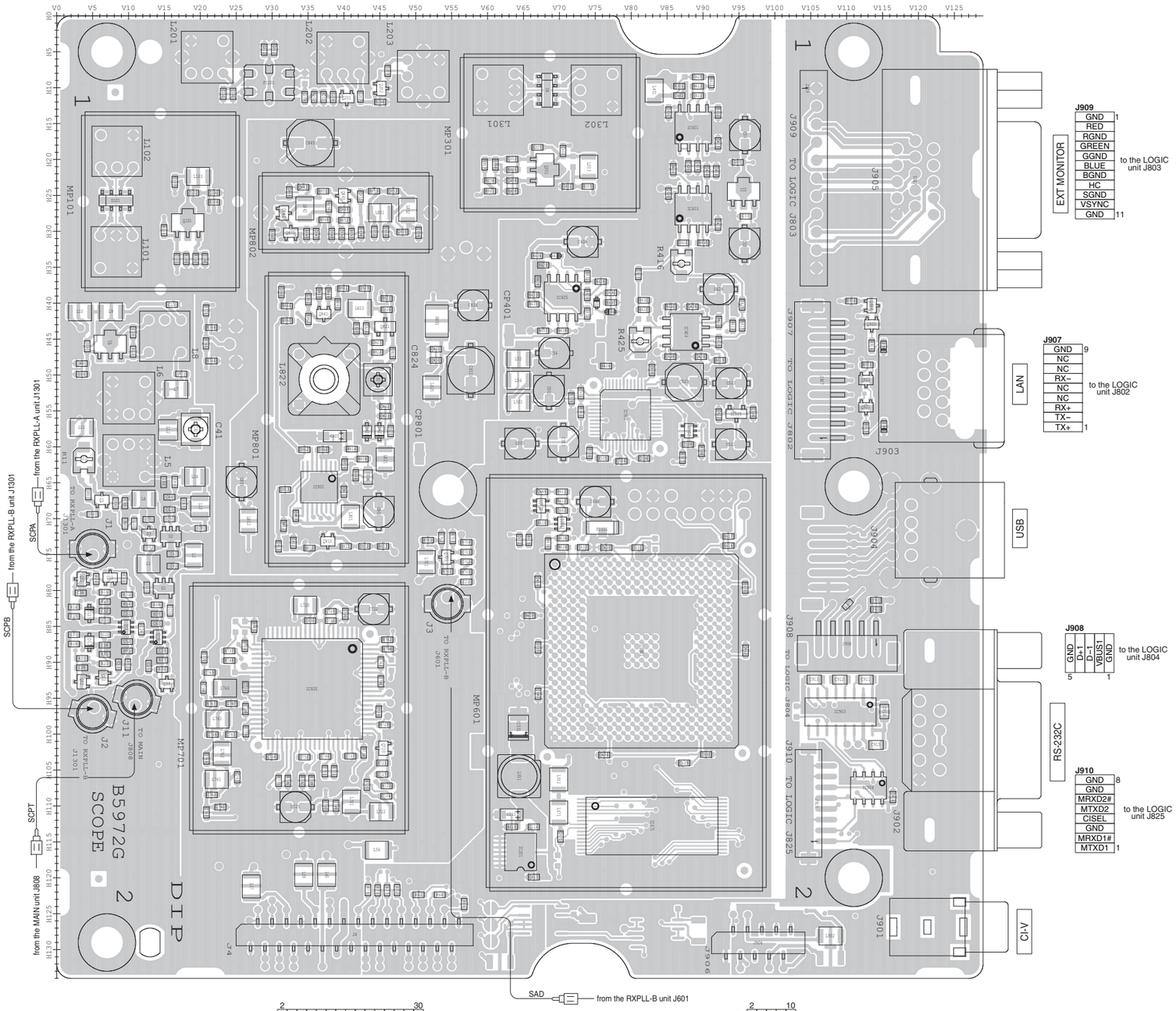


## • DSP-A/B BOARDS (TOP VIEW)

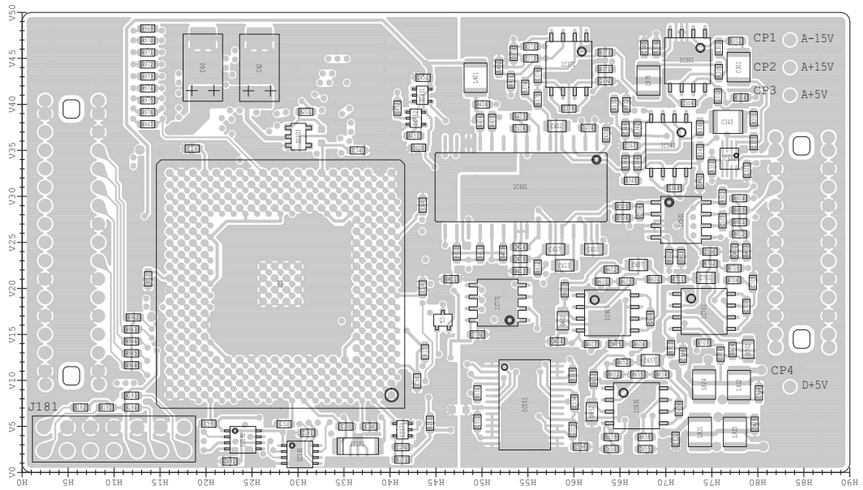


## • DSP-TX BOARD (TOP VIEW)

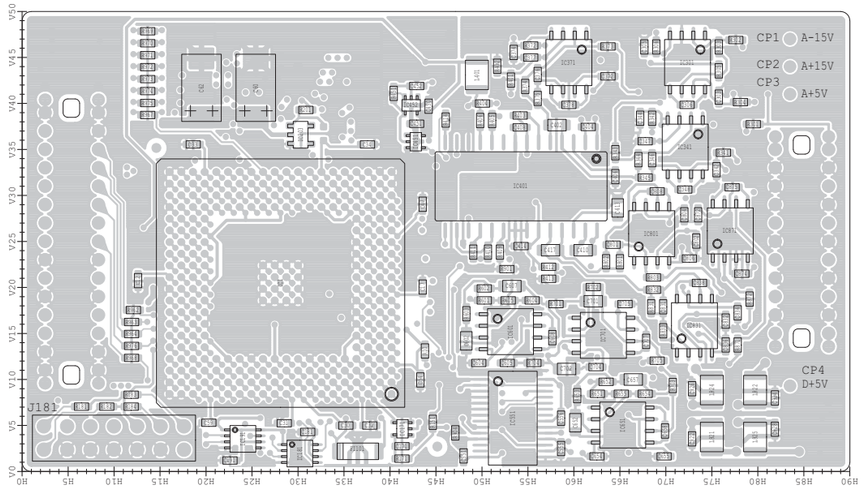

The combination of top side and bottom side of this page shows the actual configuration of P.C. board.

## • DSP-A/B BOARDS (BOTTOM VIEW)

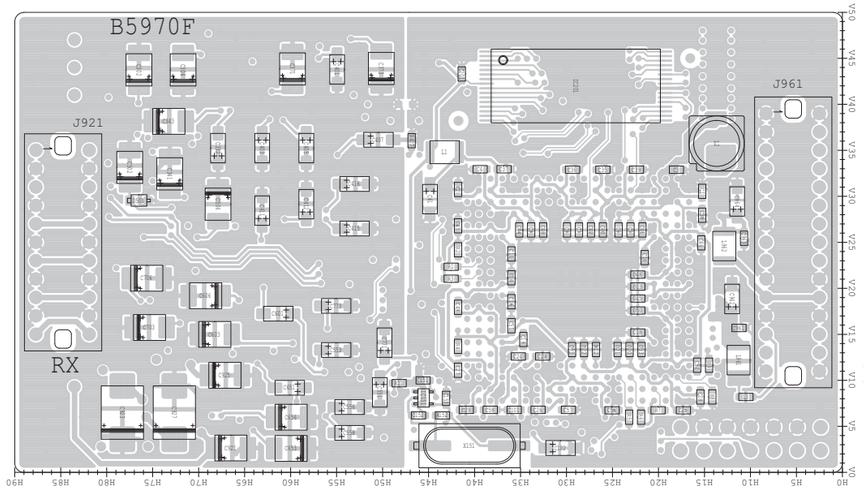


**J961**

| | | | |
|---|---|---|---|
| 1 | GND1A/B | GND1A/B | 2 |
| | GND1A/B | MCLK | |
| | DRES | DSPCK | |
| | RTDA/B | DSPR | |
| | NSQL/B | DFRA/B | |
| | DULSA/B | VSQA/B | |
| | GND1A/B | DSPCK | |
| | TNDA/B | DX1A/B | |
| | FRWT | DFXA/B | |
| | GND1A/B | GND1A/B | |
| | D3R3V | D3R3V | |
| | GND1A/B | GND1A/B | |
| | D1R2V_SENS_A/B | D1R2V_A/B | |
| | D1R2V_A/B | D1R2V_A/B | |
| 29 | GND1A/B | GND1A/B | 30 |

to the MAIN unit J341 (DSP-A)
to the MAIN unit J361 (DSP-B)

**J921**

| | | | |
|---|---|---|---|
| 1 | AGCDET_A/B | IFIN_A/B | 2 |
| | GND | GND | |
| | AFOUT_A/B | AGCOUT_A/B | |
| | GND | GND | |
| | +A5VA/B | +A5VA/B | |
| | GND | GND | |
| | −12V | −12V | |
| | GND | GND | |
| | +D5VA/B | +D5VA/B | |
| | GND | GND | |
| 11 | +15V | +15V | 22 |

to the MAIN unit J340 (DSP-A)
to the MAIN unit J360 (DSP-B)

## • DSP-TX BOARD (BOTTOM VIEW)

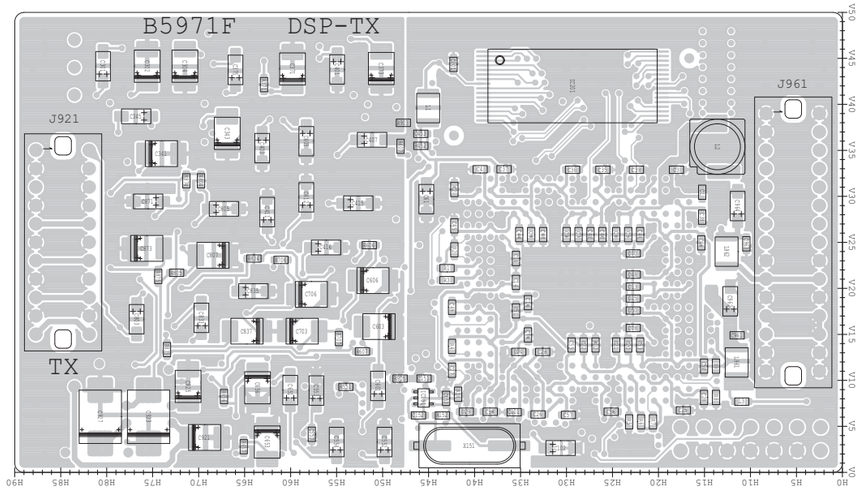


**J961**

| | | | |
|---|---|---|---|
| 1 | GND1T | GND1T | 2 |
| | GND1T | MCLK | |
| | DRES | DSPCK | |
| | DSKY | DSPR | |
| | CTFL | DFRT | |
| | DAVOX | DSPCK | |
| | CVOX | DX1T | |
| | FRWT | DFXT | |
| | GND1T | GND1T | |
| | D3R3V | D3R3V | |
| | GND1T | GND1T | |
| | D1R2V_T | D1R2V_T | |
| | D1R2V_SENS_T | D1R2V_T | |
| | GND1T | GND1T | |
| 29 | GND1T | GND1T | 30 |

to the MAIN unit J381

**J921**

| | | | |
|---|---|---|---|
| 1 | AFIN | ANVOX | 2 |
| | GND | GND | |
| | TX36K | GND | |
| | GND | GND | |
| | +A5VT | +A5VT | |
| | GND | GND | |
| | −12V | −12V | |
| | GND | GND | |
| | +D5VT | +D5VT | |
| | GND | GND | |
| 11 | +15V | +15V | 22 |

to the MAIN unit J380

## • SCOPE UNIT (BOTTOM VIEW)

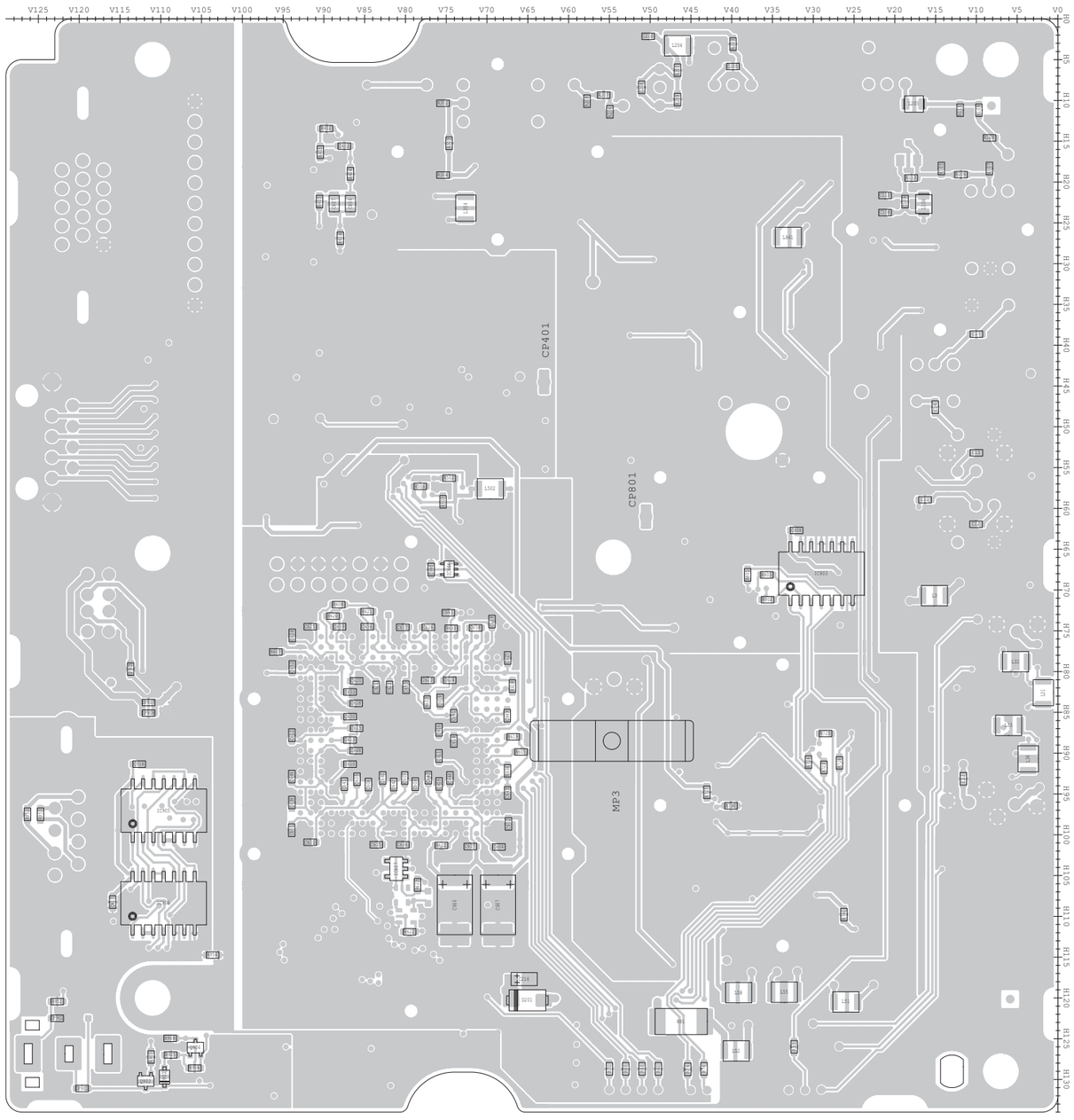

**The combination of top side and bottom side of this page shows the actual configuration of P.C. board.**

## • RXPLL-A UNIT (TOP VIEW)

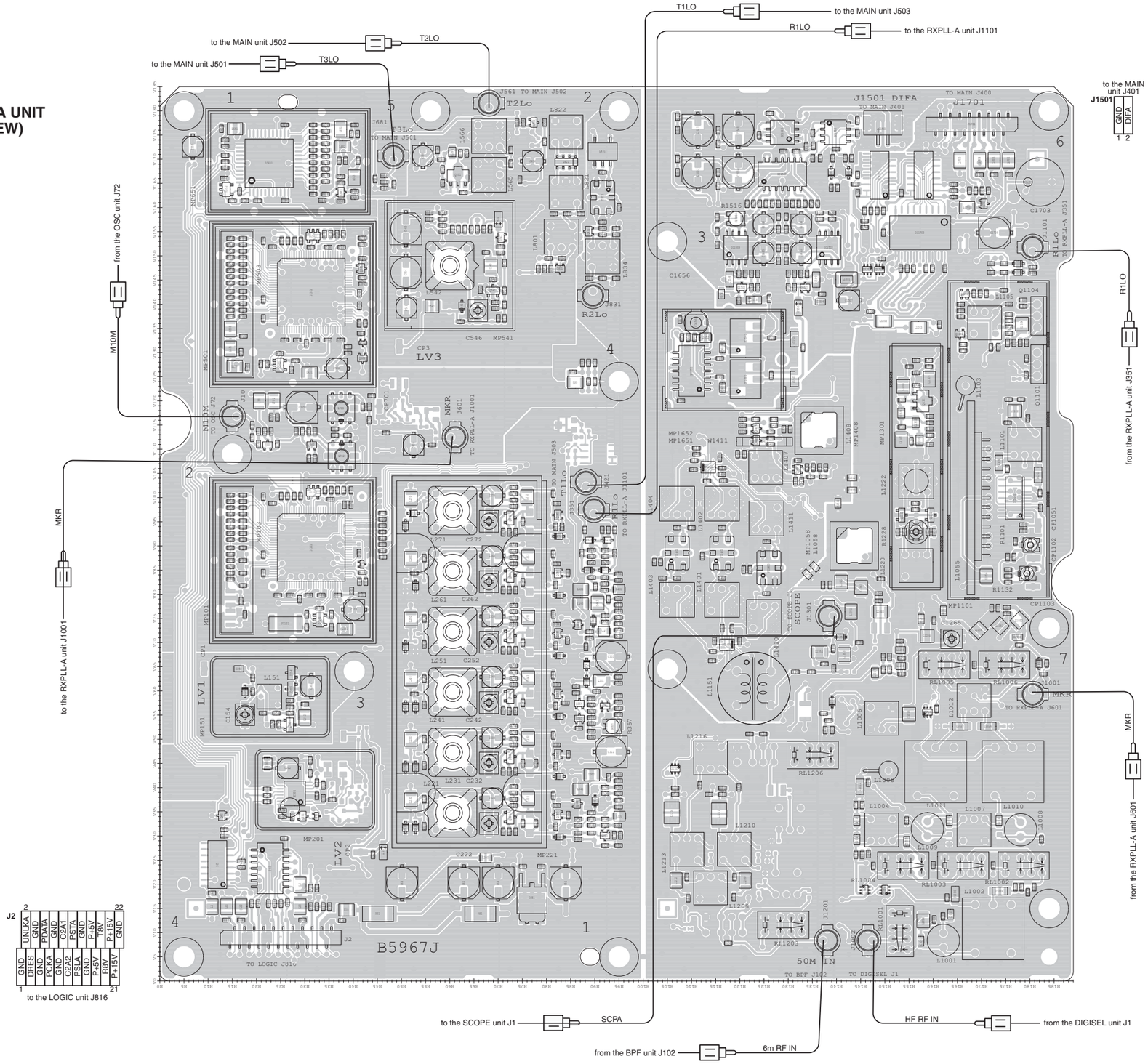


J1501

| 1 | 2 |
|---|---|
| GND | DIFA |

J1701

| 1 | | 15 |
|---|---|---|
| RSTBA | | GND |
| MCK | | +15V |
| GND | | −15V |
| AGCIA | | +12V |
| +3R3V | | NC |
| +8V | | NC |
| AGCOA | | +15V |
| NC | | |
| NC | | |
| GND | | |
| MDAT | | |
| GND | | |
| 16 | | 2 |

J2

| 2 | | 22 |
|---|---|---|
| UNLKA | | GND |
| GND | | P+15V |
| PCKA | | T8V |
| GND | | P+5V |
| C2A1 | | GND |
| PSTA | | PSLA |
| GND | | GND |
| P+5V | | C2A2 |
| T8V | | GND |
| P+15V | | DRES |
| GND | | GND |
| 1 | | 21 |

The combination of top side and bottom side of this page shows the actual configuration of P.C. board.

• **RXPLL-A UNIT (BOTTOM VIEW)**

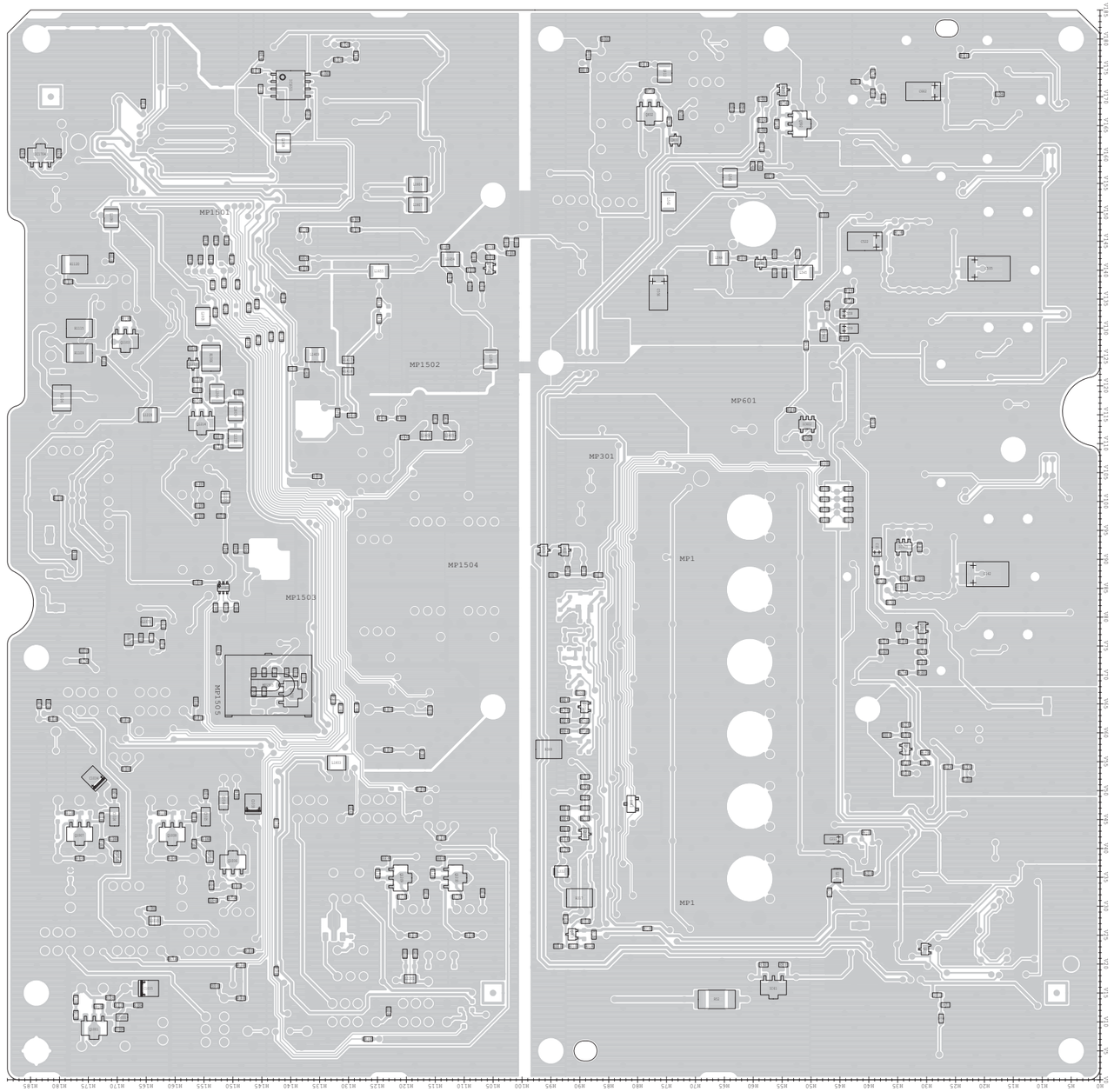

The combination of top side and bottom side of this page shows the actual configuration of P.C. board.

## • RXPLL-B UNIT (TOP VIEW)

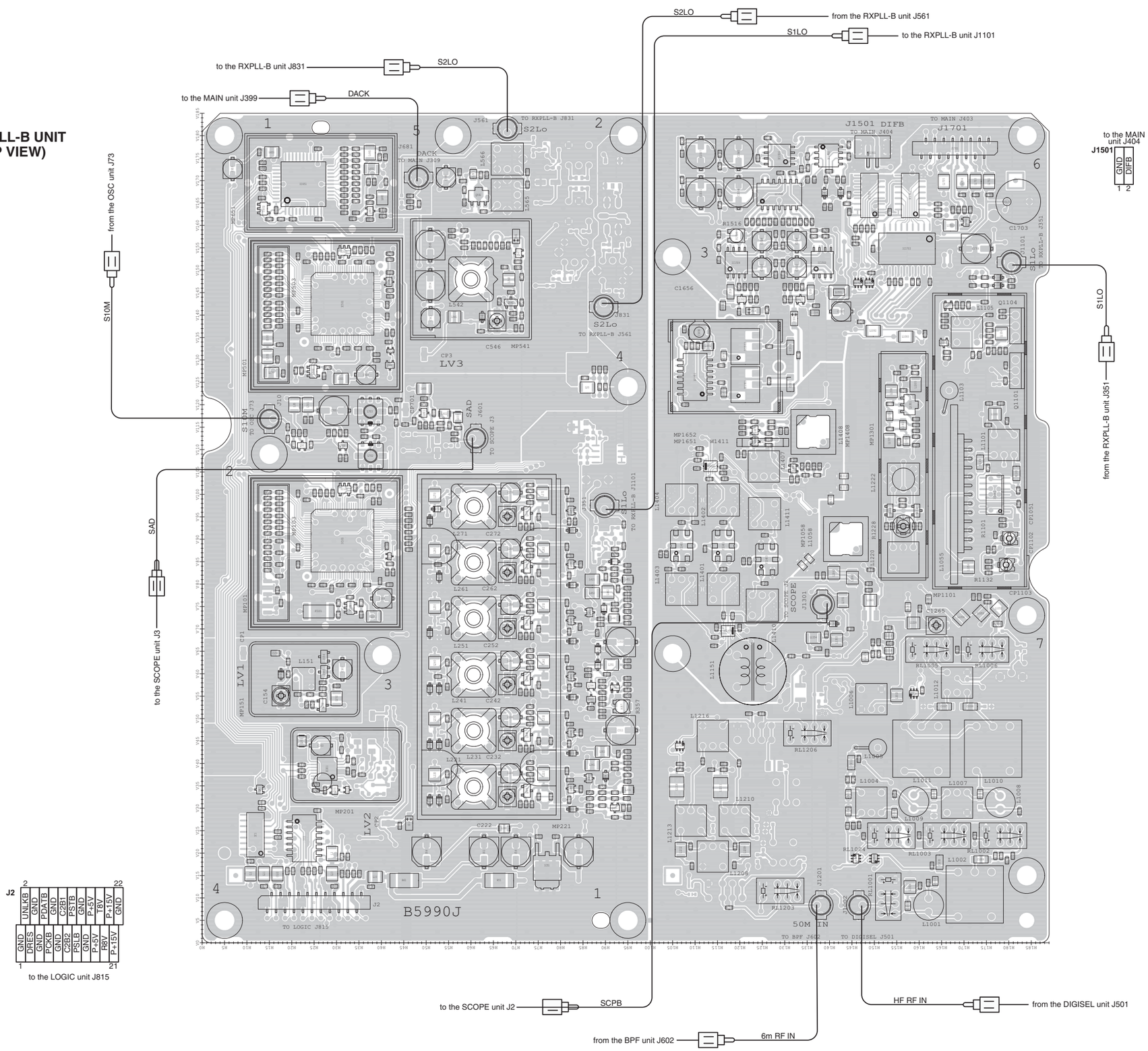

The combination of top side and bottom side of this page shows the actual configuration of P.C. board.

• **RXPLL-B UNIT (BOTTOM VIEW)**

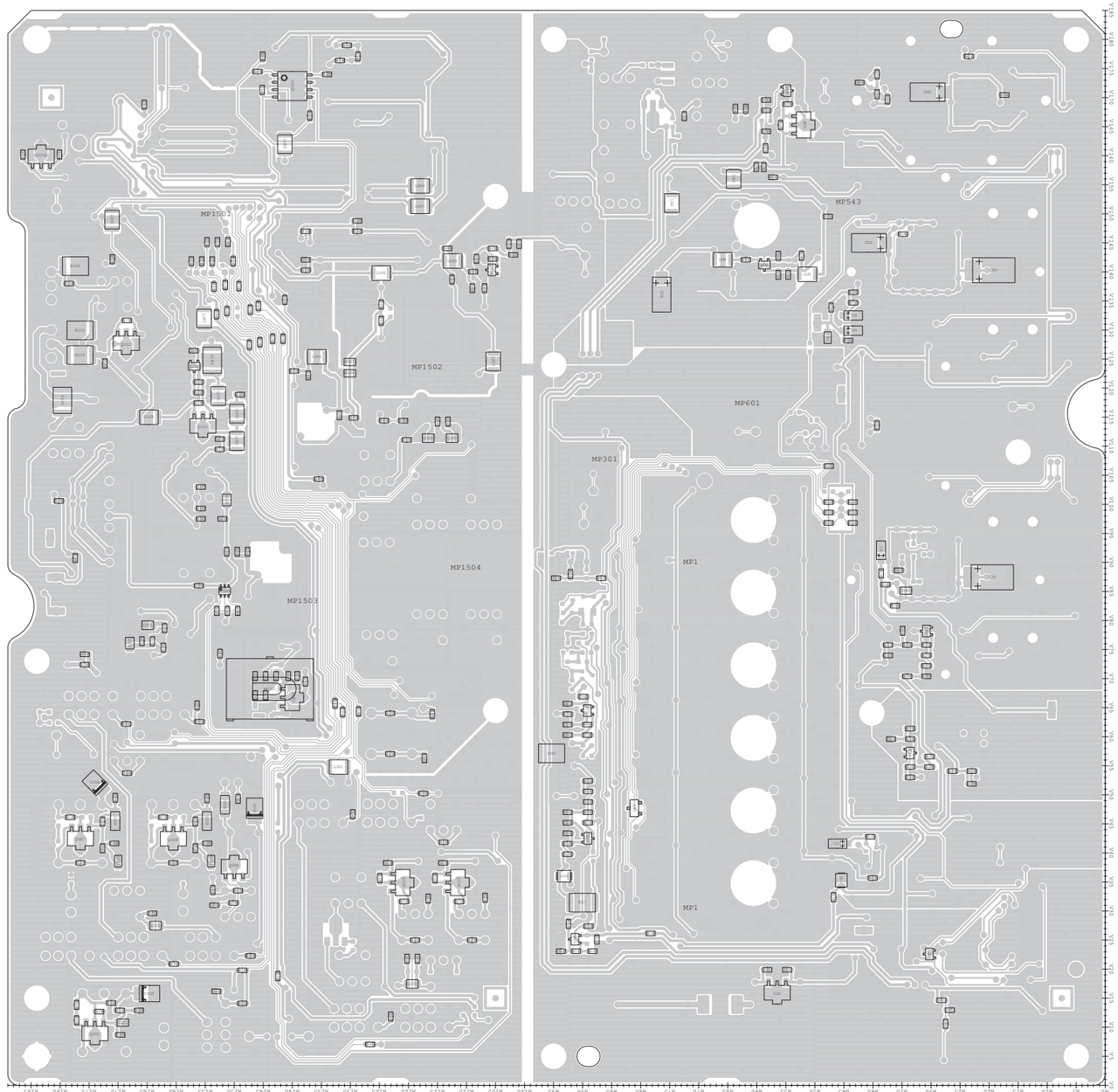

The combination of top side and bottom side of this page shows the actual configuration of P.C. board.

## • DIGISEL UNIT (TOP VIEW)

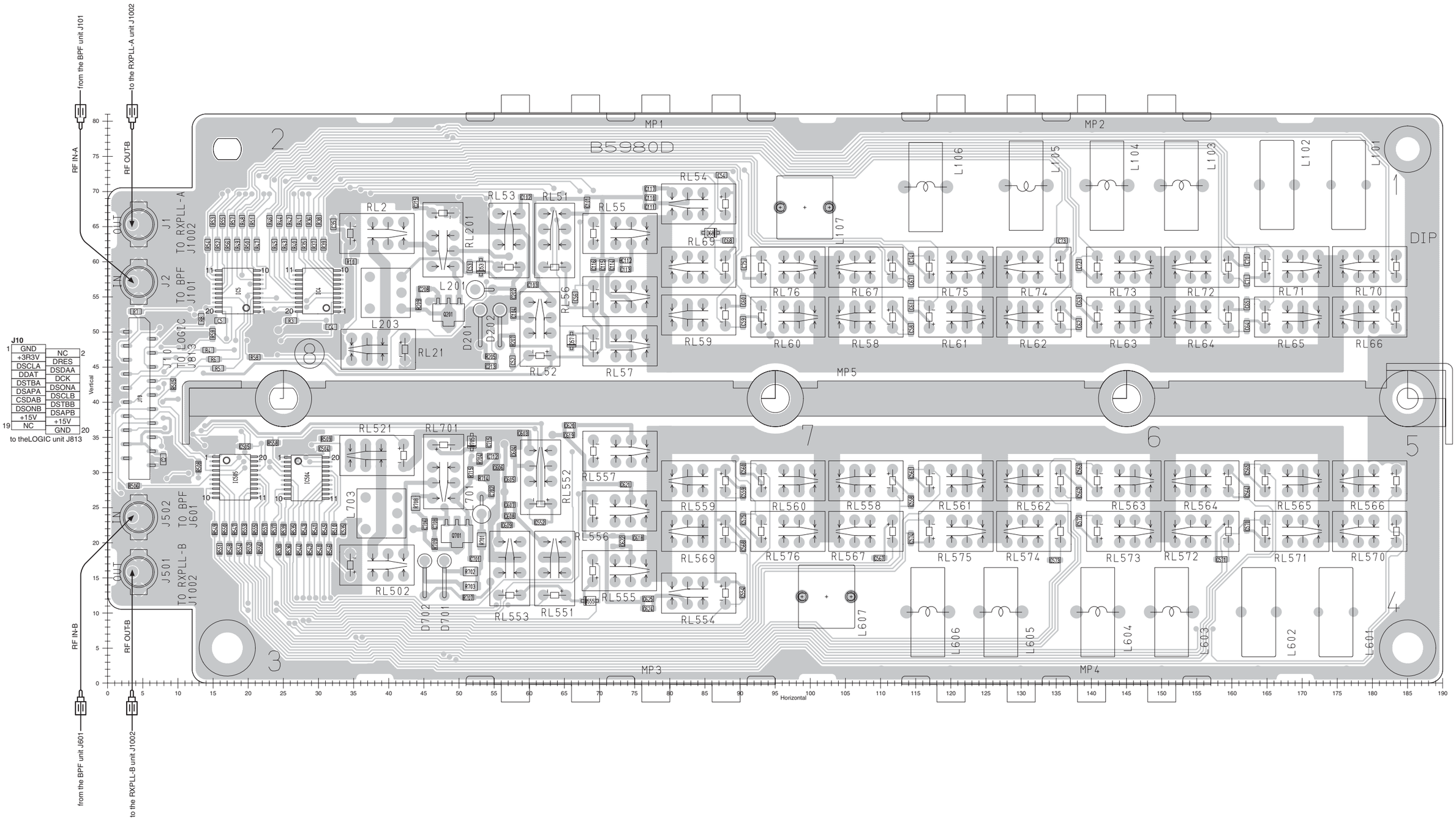

The combination of top side and bottom side of this page shows the actual configuration of P.C. board.

• **DIGISEL UNIT**
**(BOTTOM VIEW)**

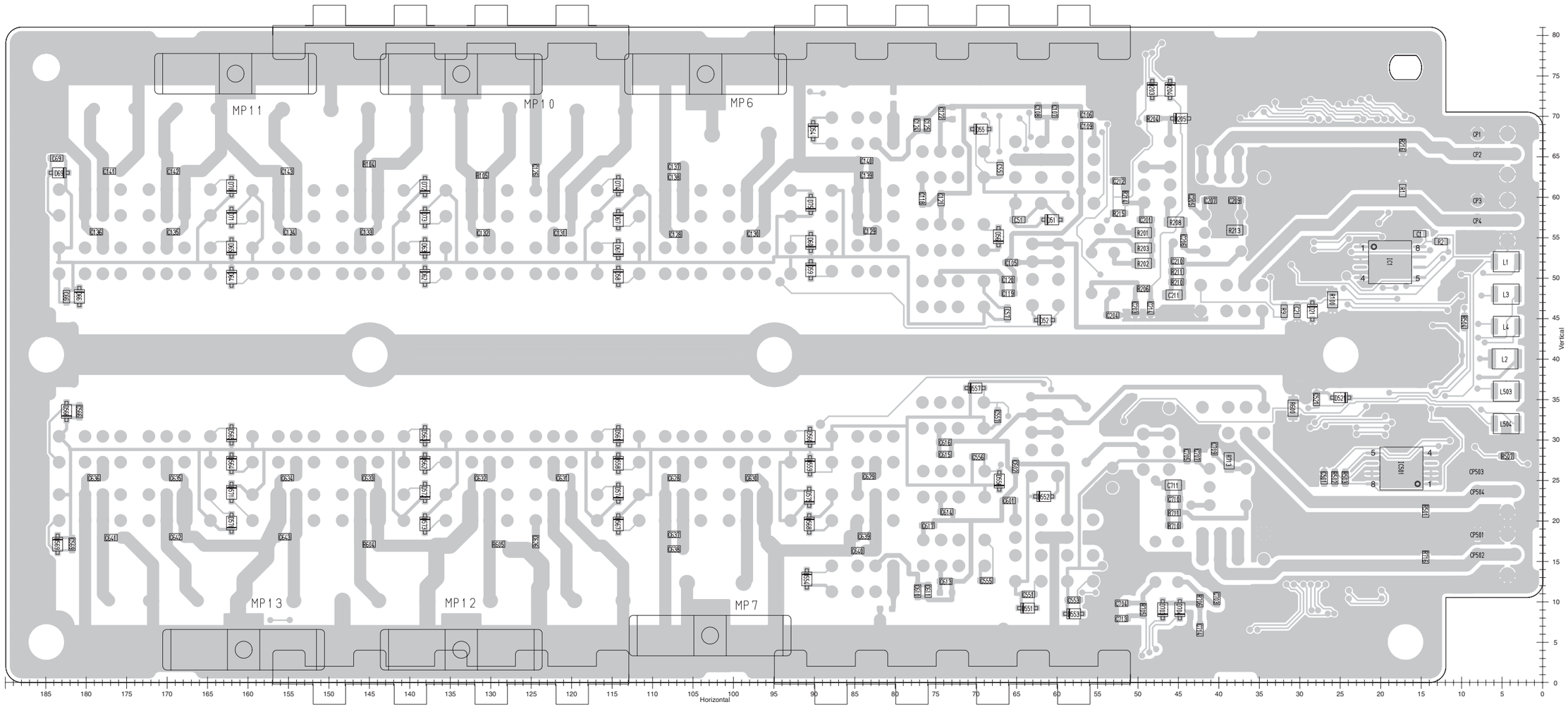

The combination of top side and bottom side of this page shows the actual configuration of P.C. board.

**• OSC UNIT (TOP VIEW)**

M10M — to the RXPLL-A unit J10

S10M — to the RXPLL-B unit J10

**J2** (to the LOGIC unit J814)

| 2 | 4 | 6 | 8 | 10 |
|---|---|---|---|---|
| OCK | OCS | OSS1 | P+15V | GND |

| 1 | 3 | 5 | 7 | 9 |
|---|---|---|---|---|
| GND | ODAT | OSS2 | P+8V | P+15V |

REF IO — from the MAIN unit J491

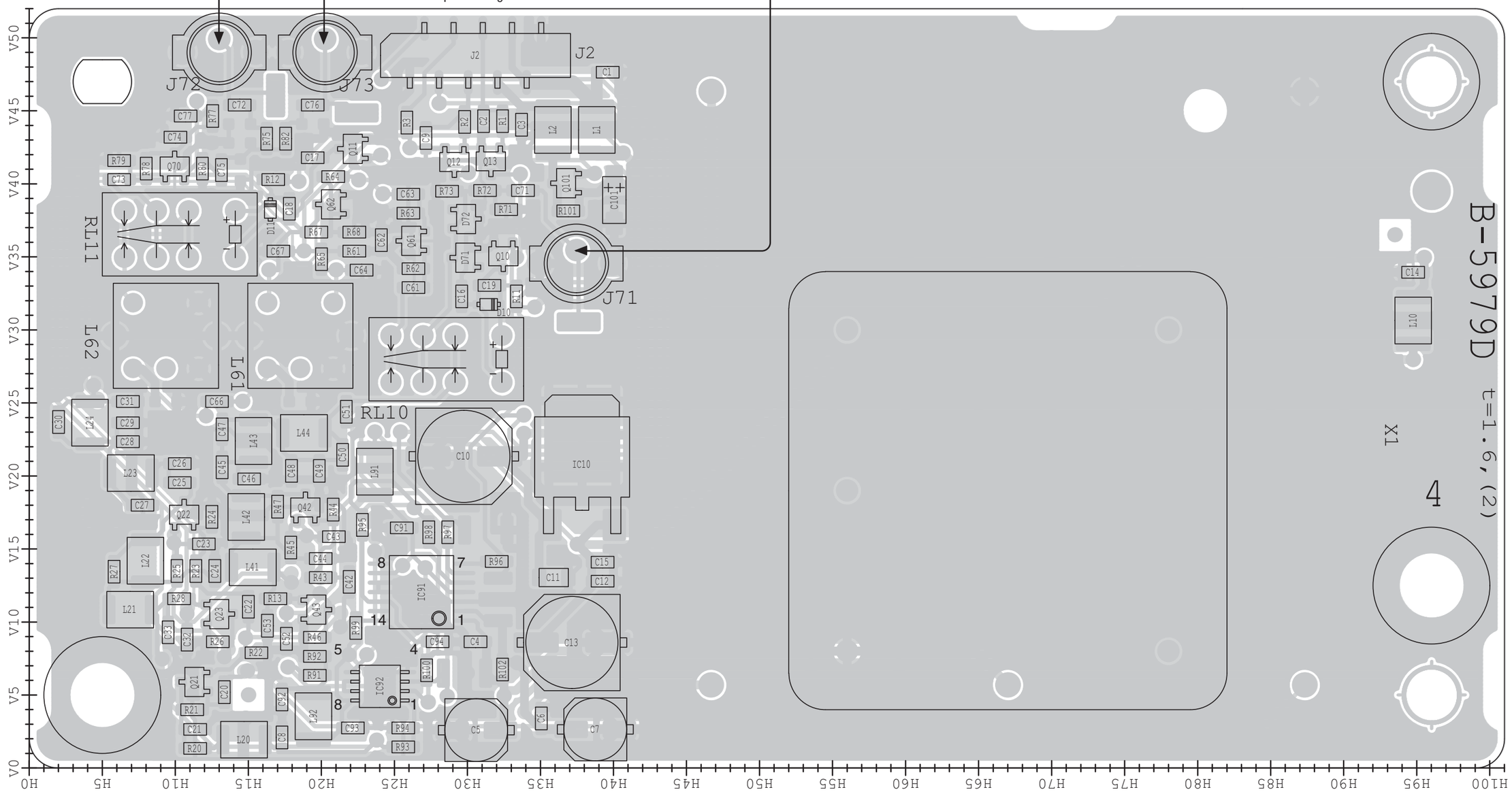

The combination of top side and bottom side of this page shows the actual configuration of P.C. board.

• **OSC UNIT**
**(BOTTOM VIEW)**

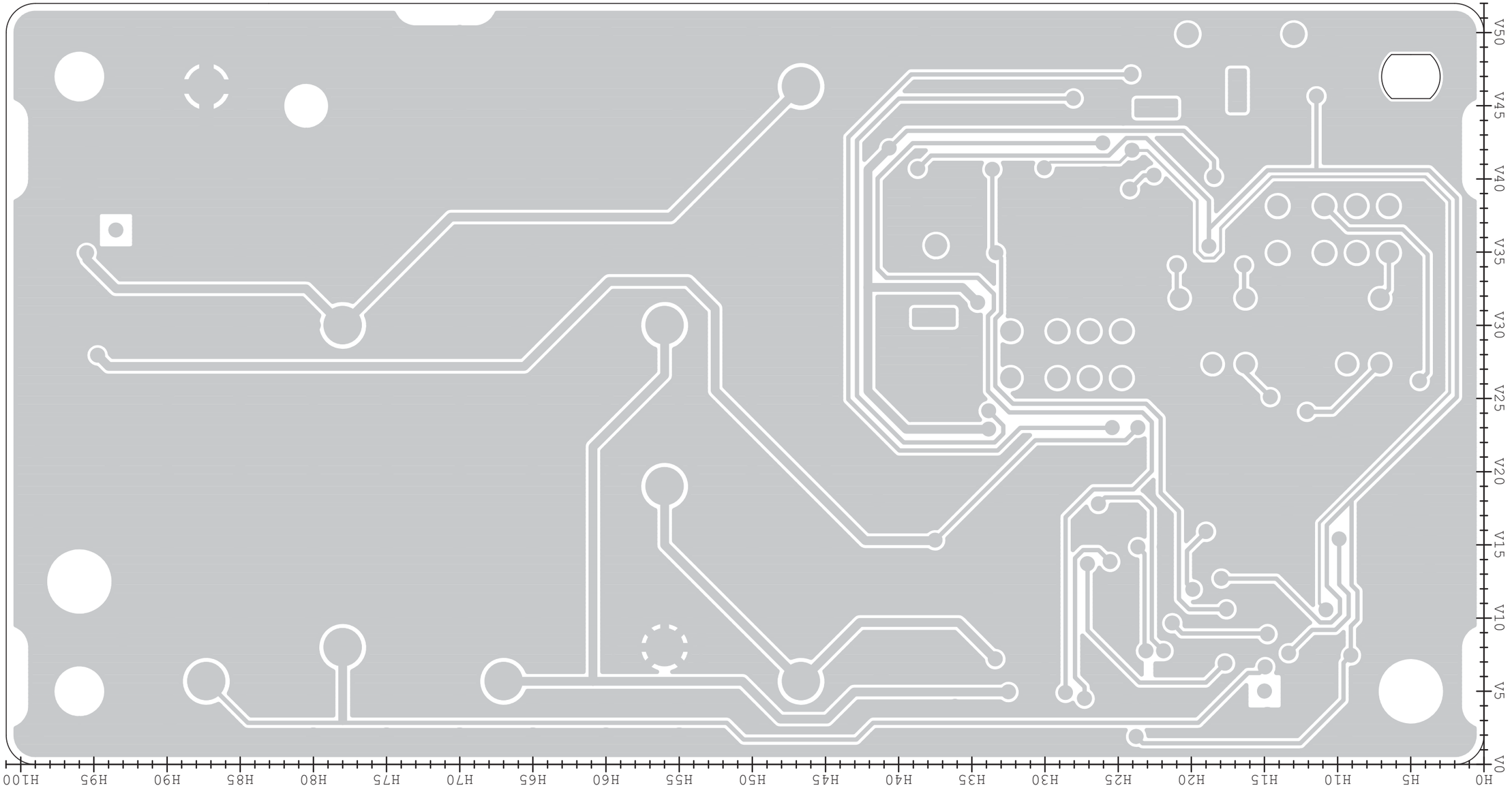

## • ANT-SW UNIT (TOP VIEW)

The combination of top side and bottom side of this page shows the actual configuration of P.C. board.

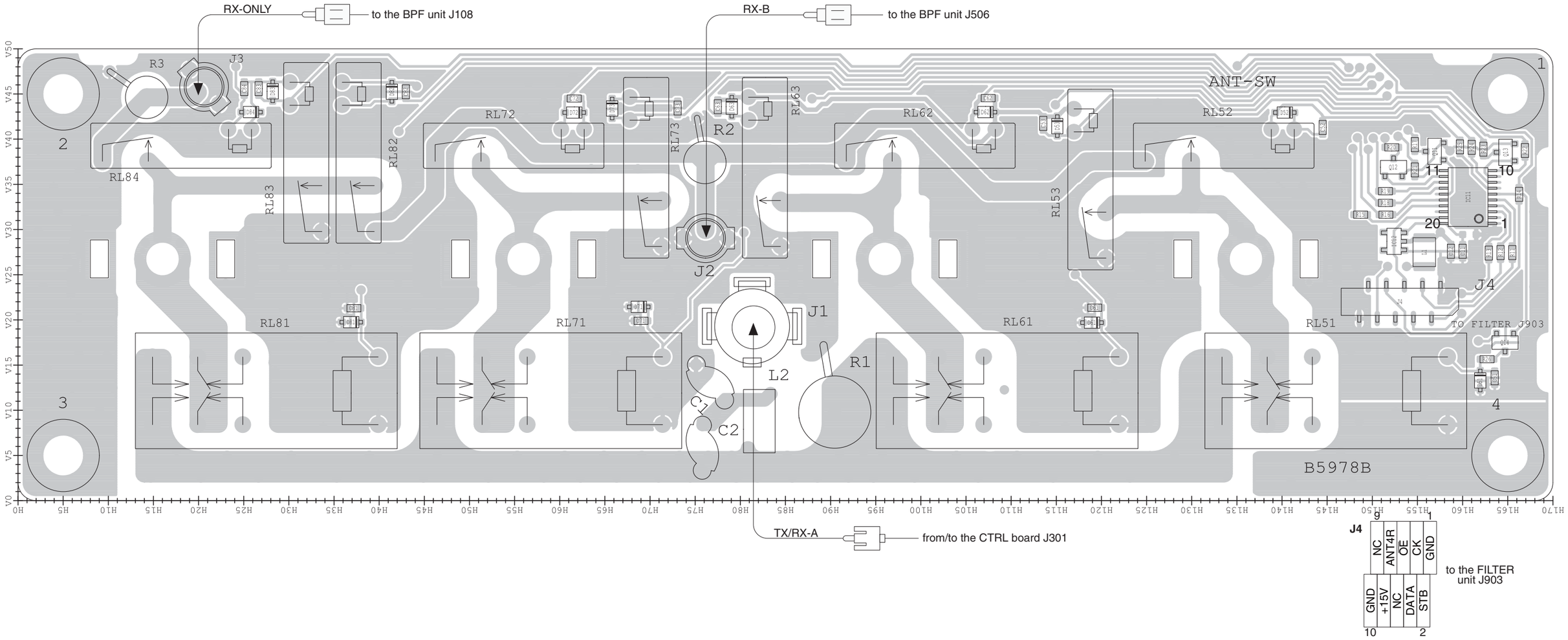

• **ANT-SW UNIT**
**(BOTTOM VIEW)**

**The combination of top side and bottom side of this page shows the actual configuration of P.C. board.**

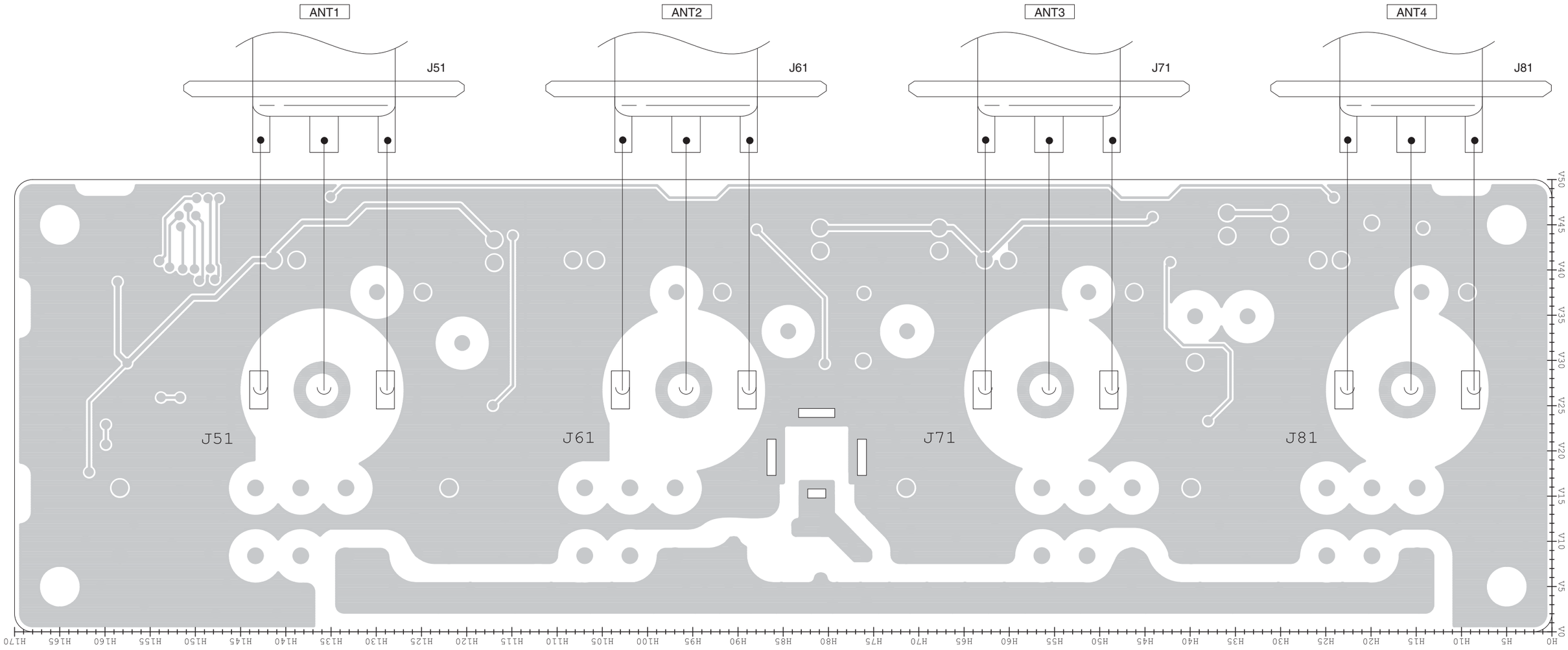

## • FILTER UNIT (TOP VIEW)

**The combination of top side and bottom side of this page shows the actual configuration of P.C. board.**

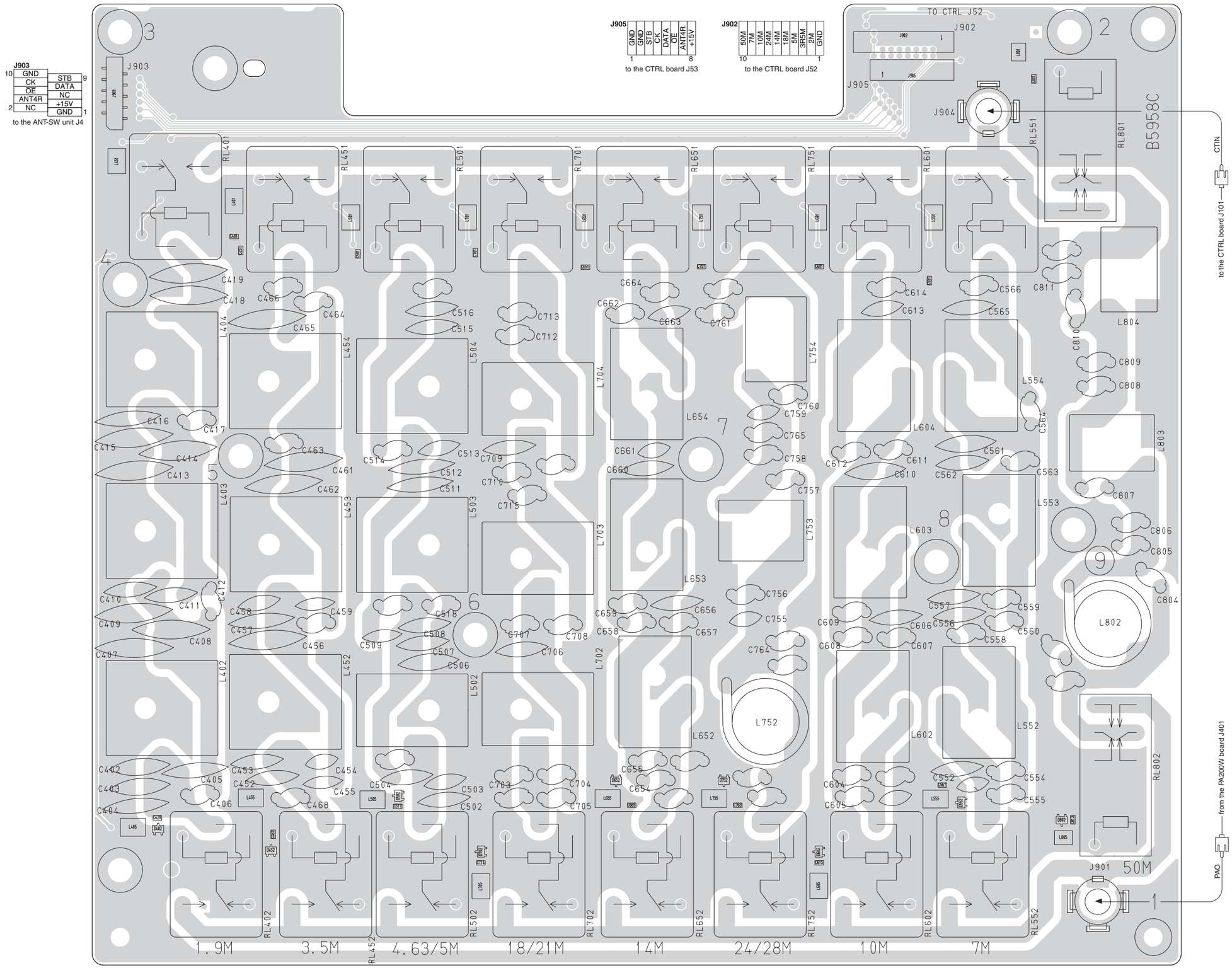

• FILTER UNIT
(BOTTOM VIEW)

The combination of top side and bottom side of this page shows the actual configuration of P.C. board.

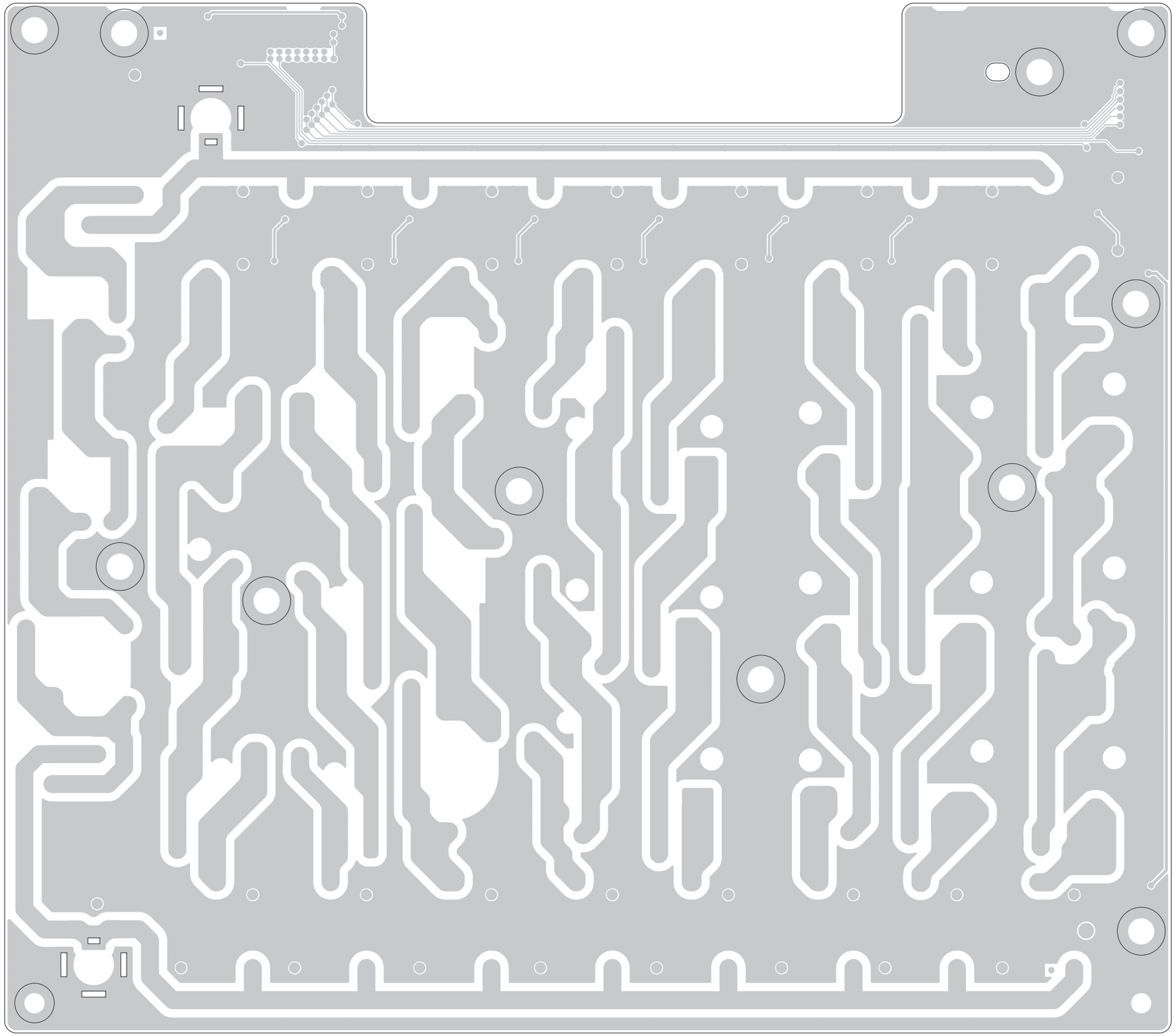

## • NETWORK BOARD (TOP VIEW)

**The combination of top side and bottom side of this page shows the actual configuration of P.C. board.**

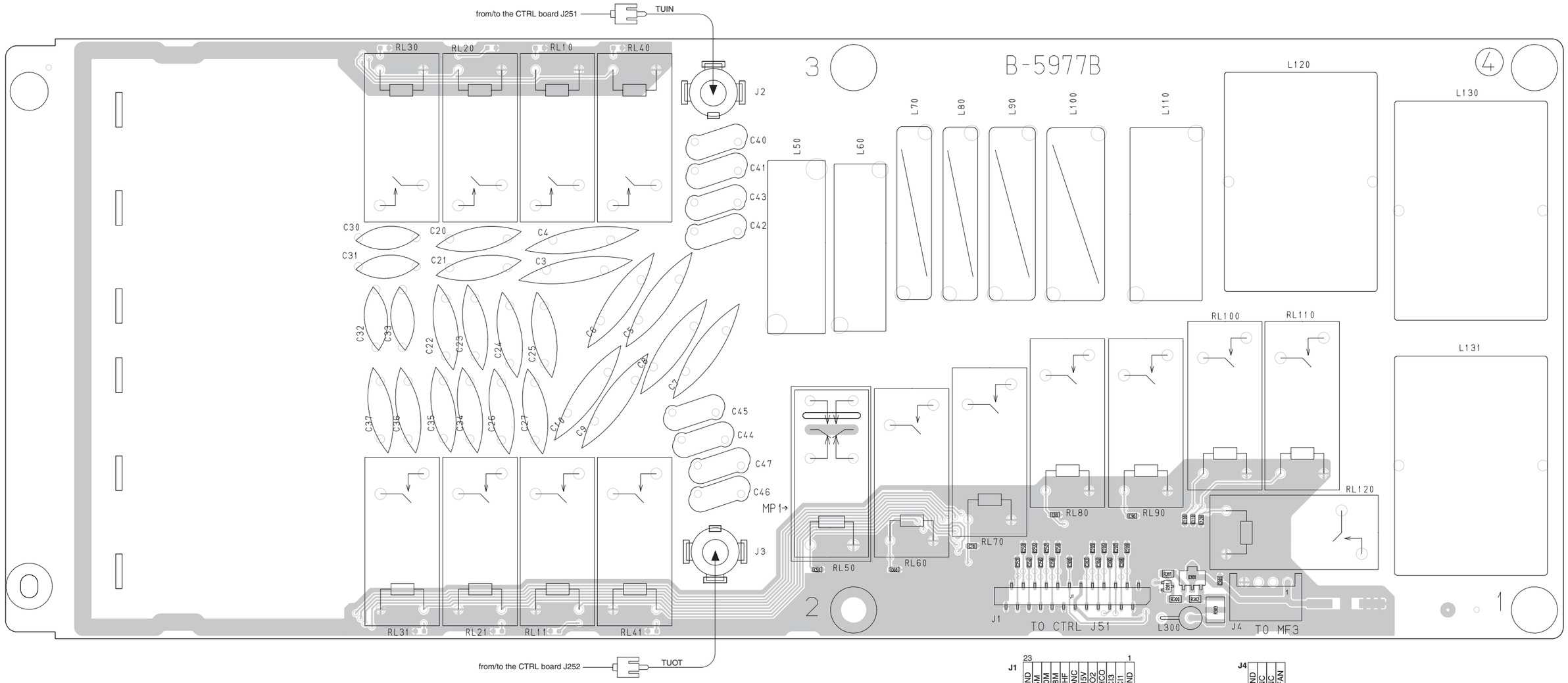

• NETWORK BOARD
(BOTTOM VIEW)

The combination of top side and bottom side of this page shows the actual configuration of P.C. board.

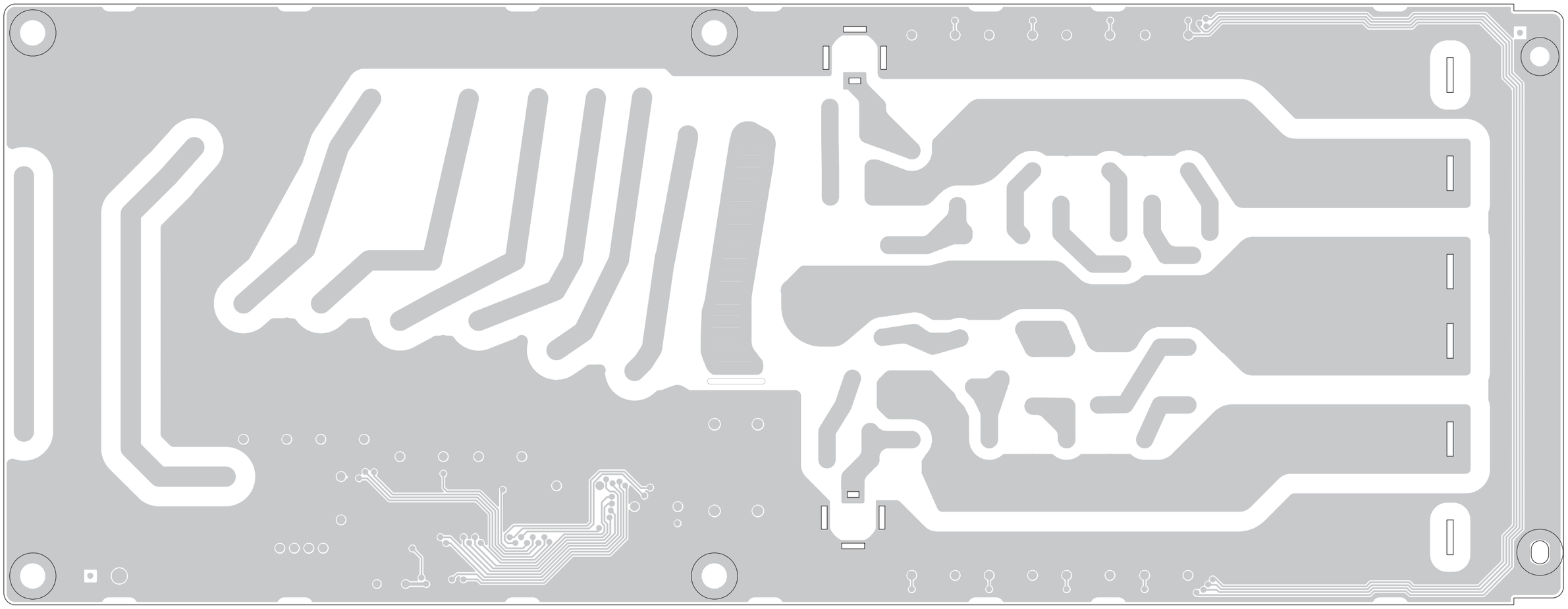

The combination of top side and bottom side of this page shows the actual configuration of P.C. board.

## • CTRL BOARD (TOP VIEW)

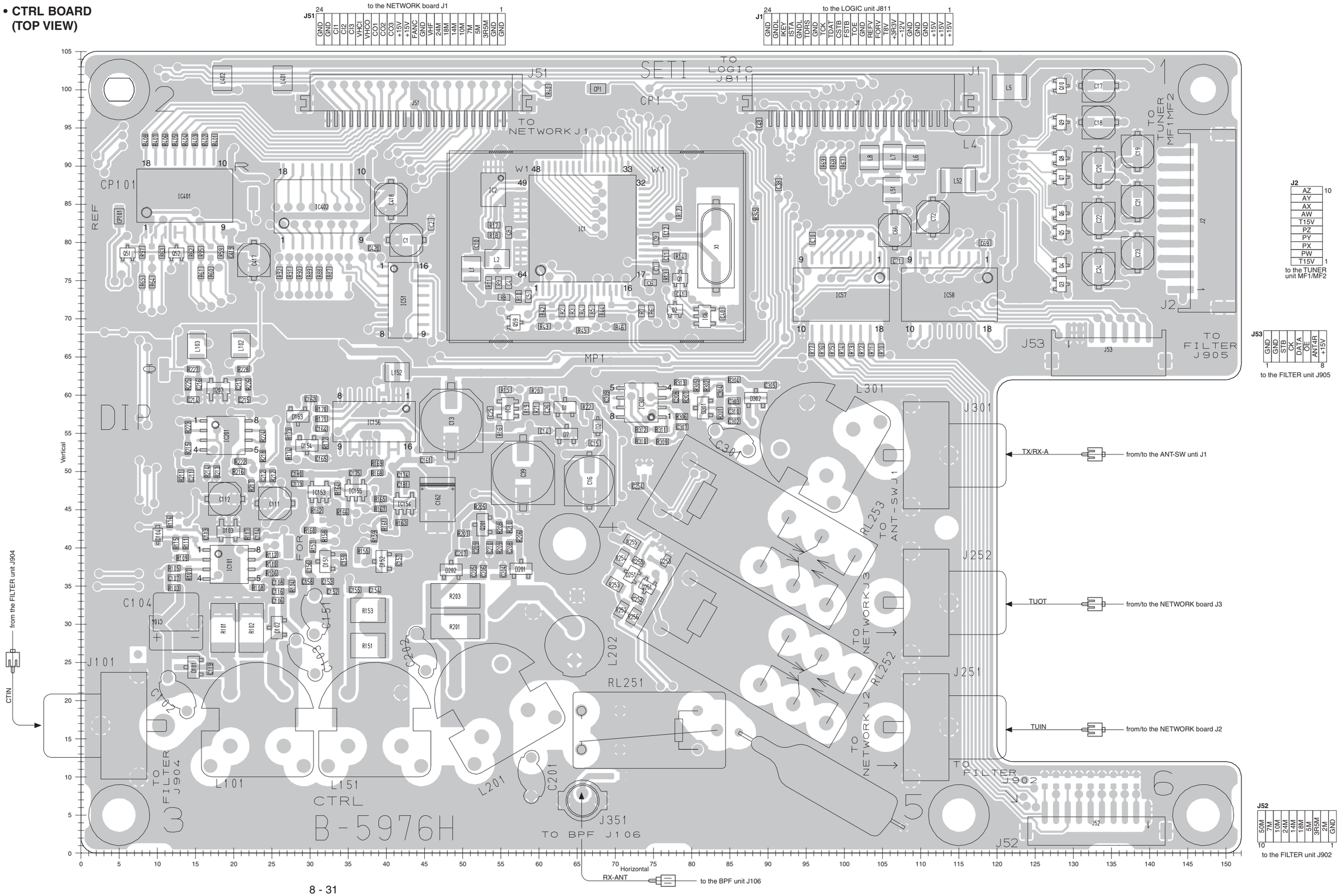

The combination of top side and bottom side of this page shows the actual configuration of P.C. board.

• **CTRL BOARD**
**(BOTTOM VIEW)**

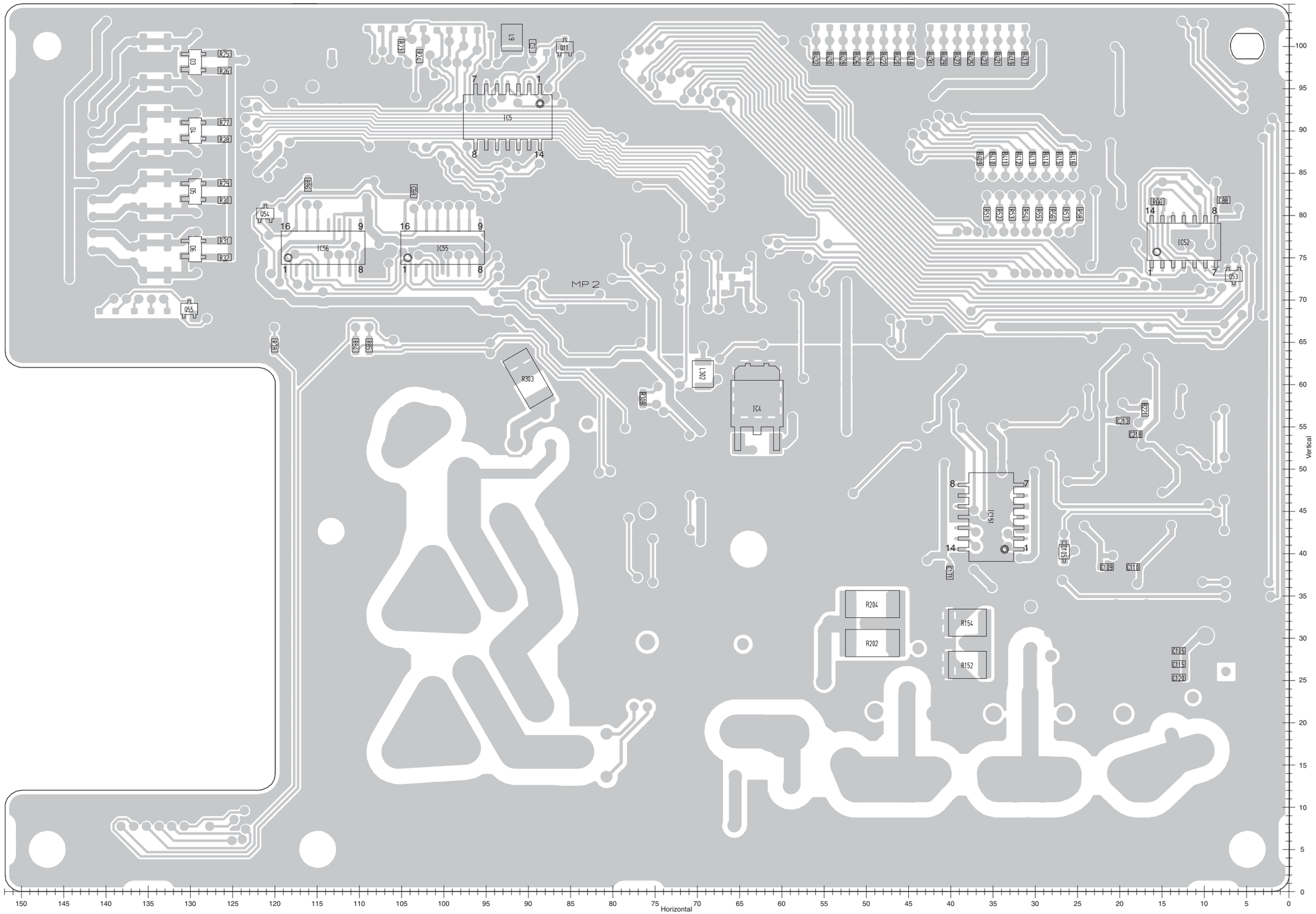

**• BPF UNIT**
**(TOP VIEW)**

The combination of top side and bottom side of this page shows the actual configuration of P.C. board.

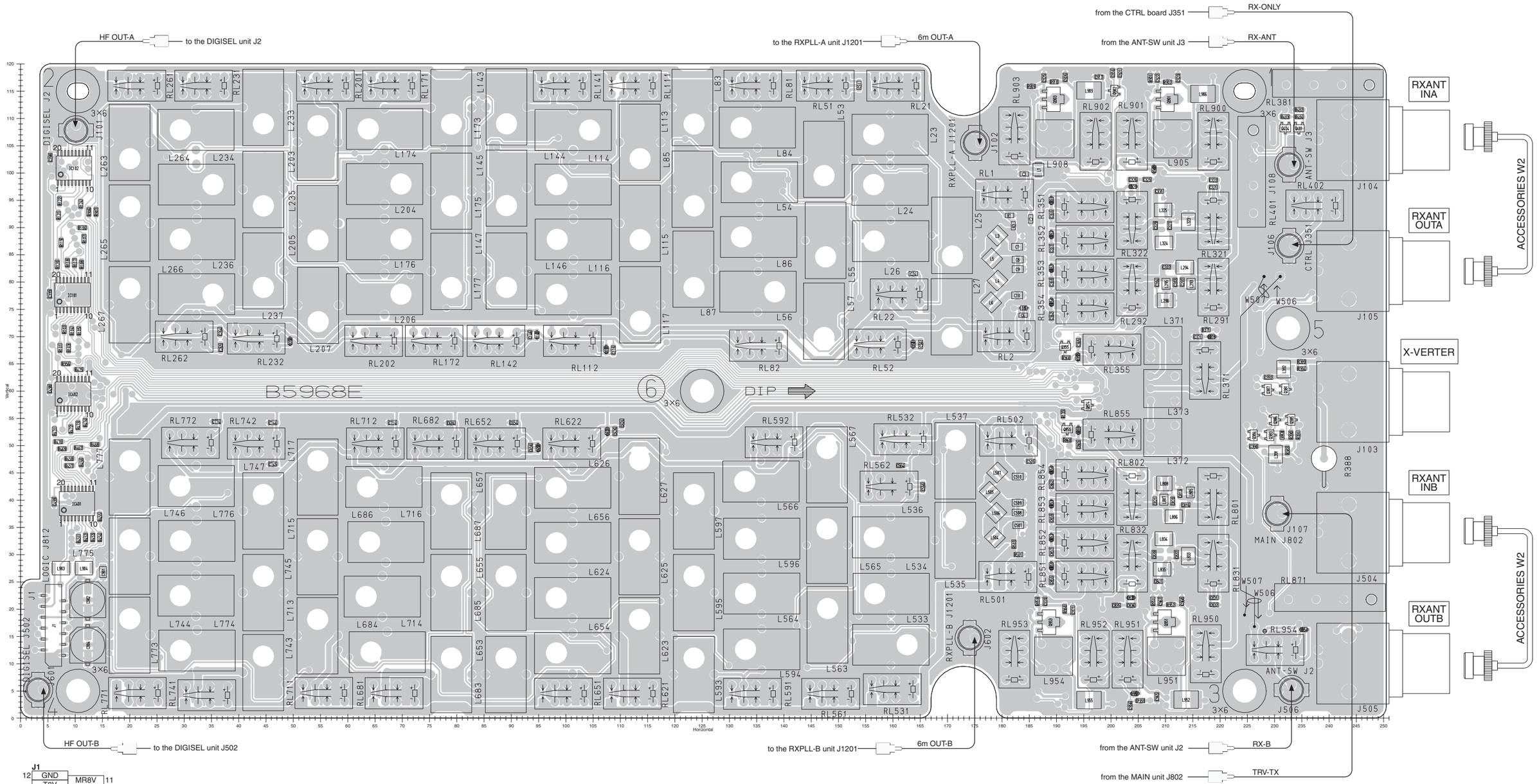

The combination of top side and bottom side of this page shows the actual configuration of P.C. board.

• **BPF UNIT**
**(BOTTOM VIEW)**

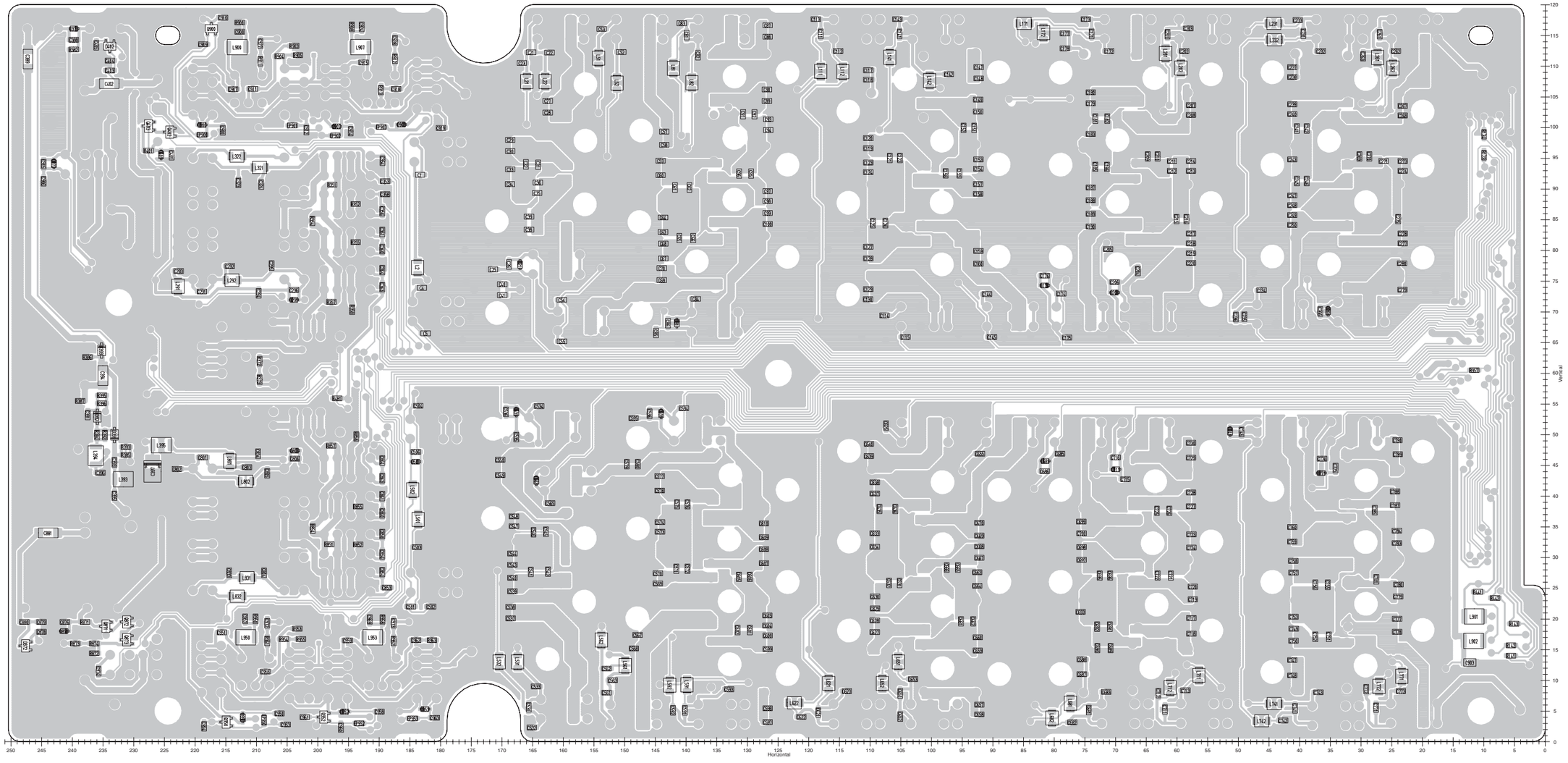

The combination of top side and bottom side of this page shows the actual configuration of P.C. board.

## • PA200W BOARD (TOP VIEW)

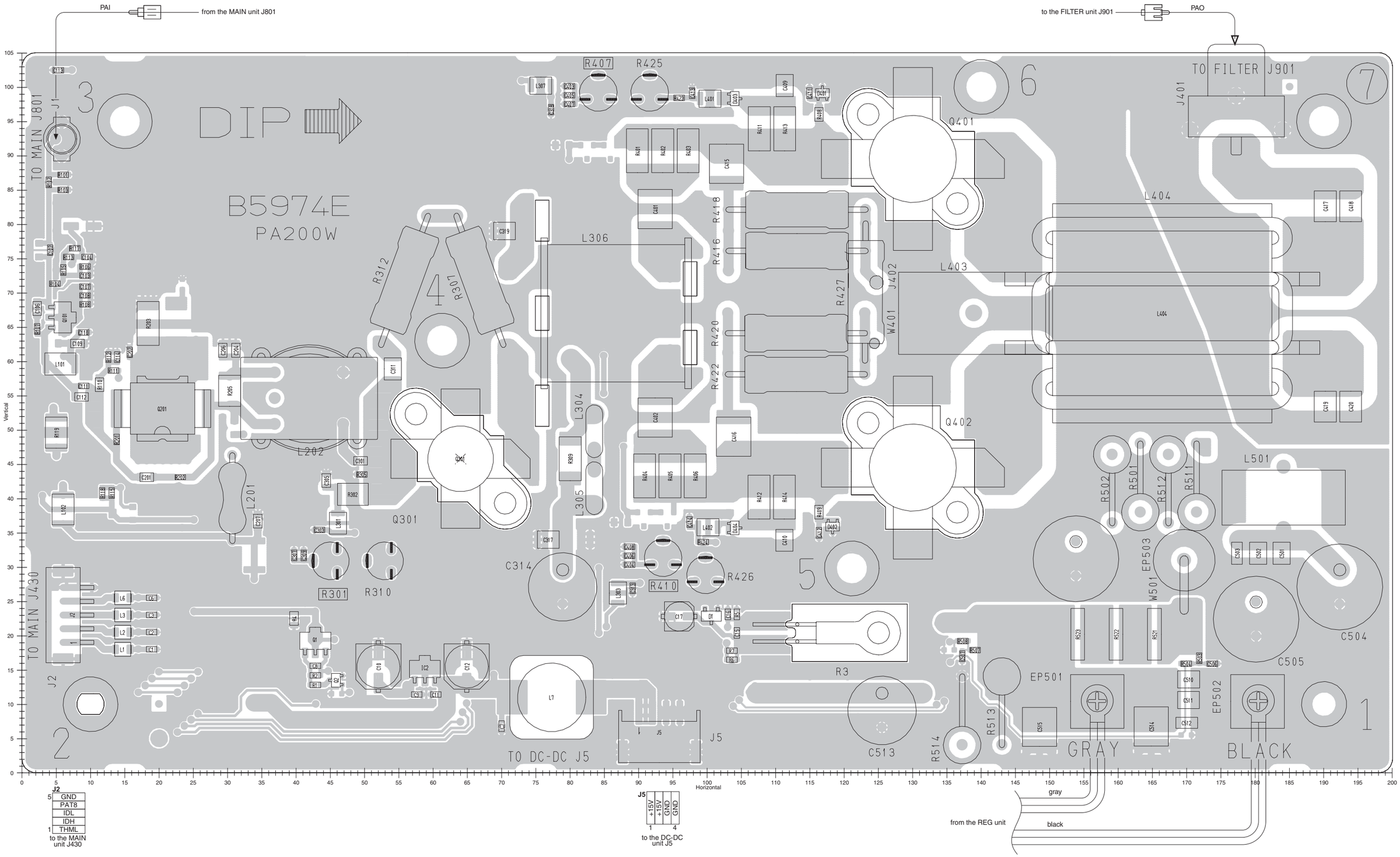

The combination of top side and bottom side of this page shows the actual configuration of P.C. board.

• **PA200W BOARD**
**(BOTTOM VIEW)**

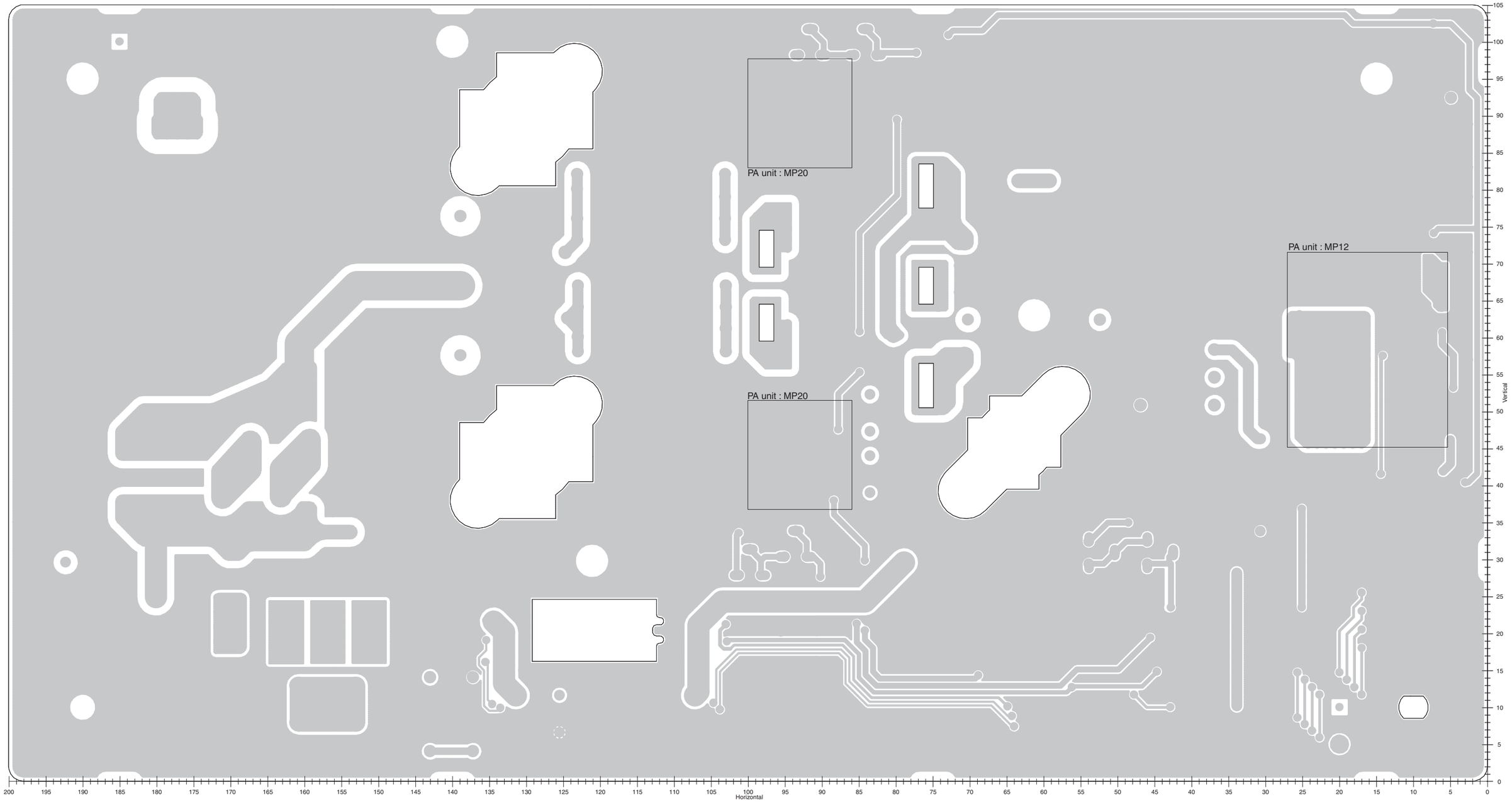

**• DC-DC UNIT (TOP VIEW)**

**The combination of top side and bottom side of this page shows the actual configuration of P.C. board.**

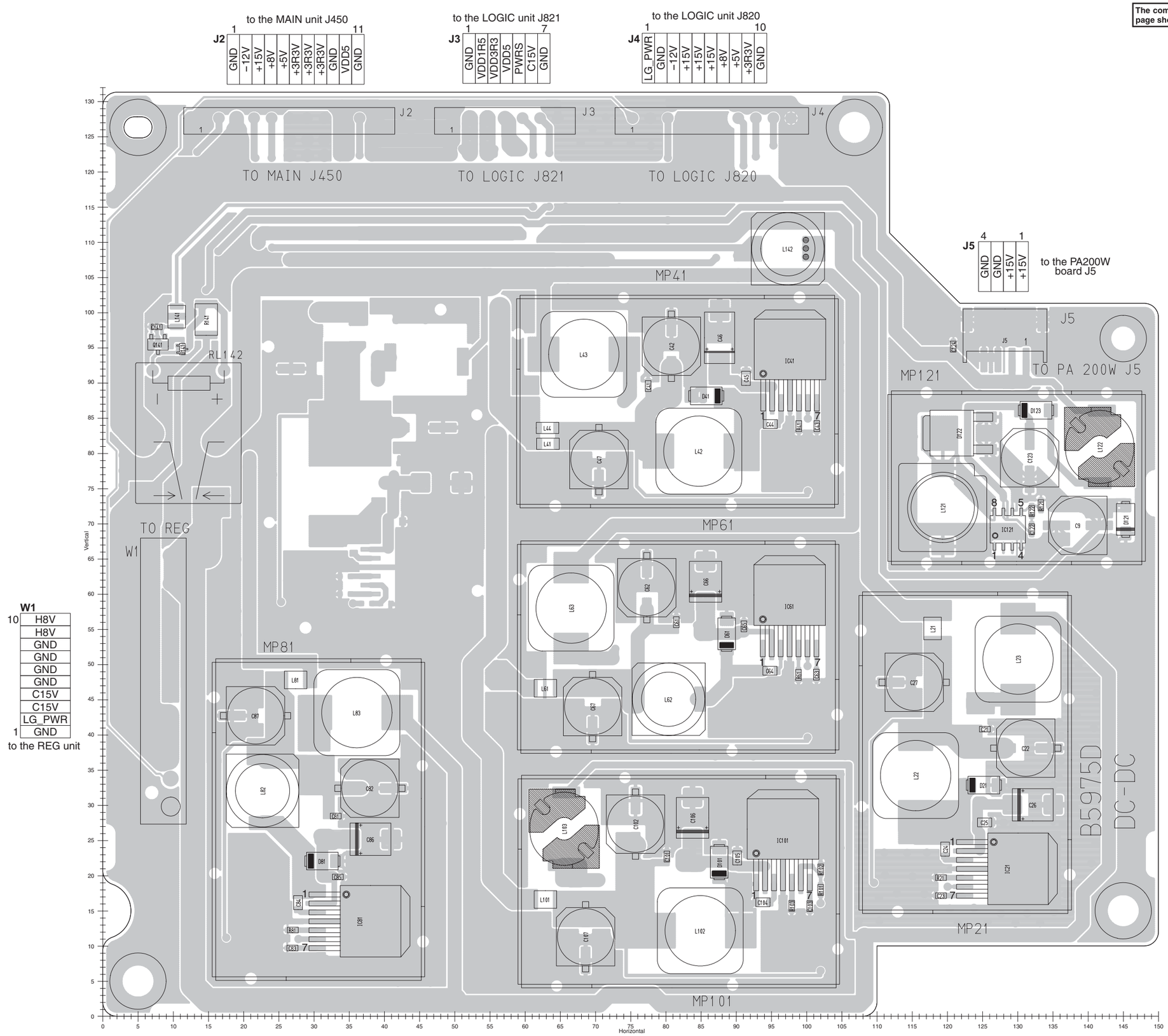


**W1**

| | |
|---|---|
| 10 | H8V |
| | H8V |
| | GND |
| | GND |
| | GND |
| | GND |
| | C15V |
| | C15V |
| | LG_PWR |
| 1 | GND |

to the REG unit

• **DC-DC UNIT**
**(BOTTOM VIEW)**

**The combination of top side and bottom side of this page shows the actual configuration of P.C. board.**

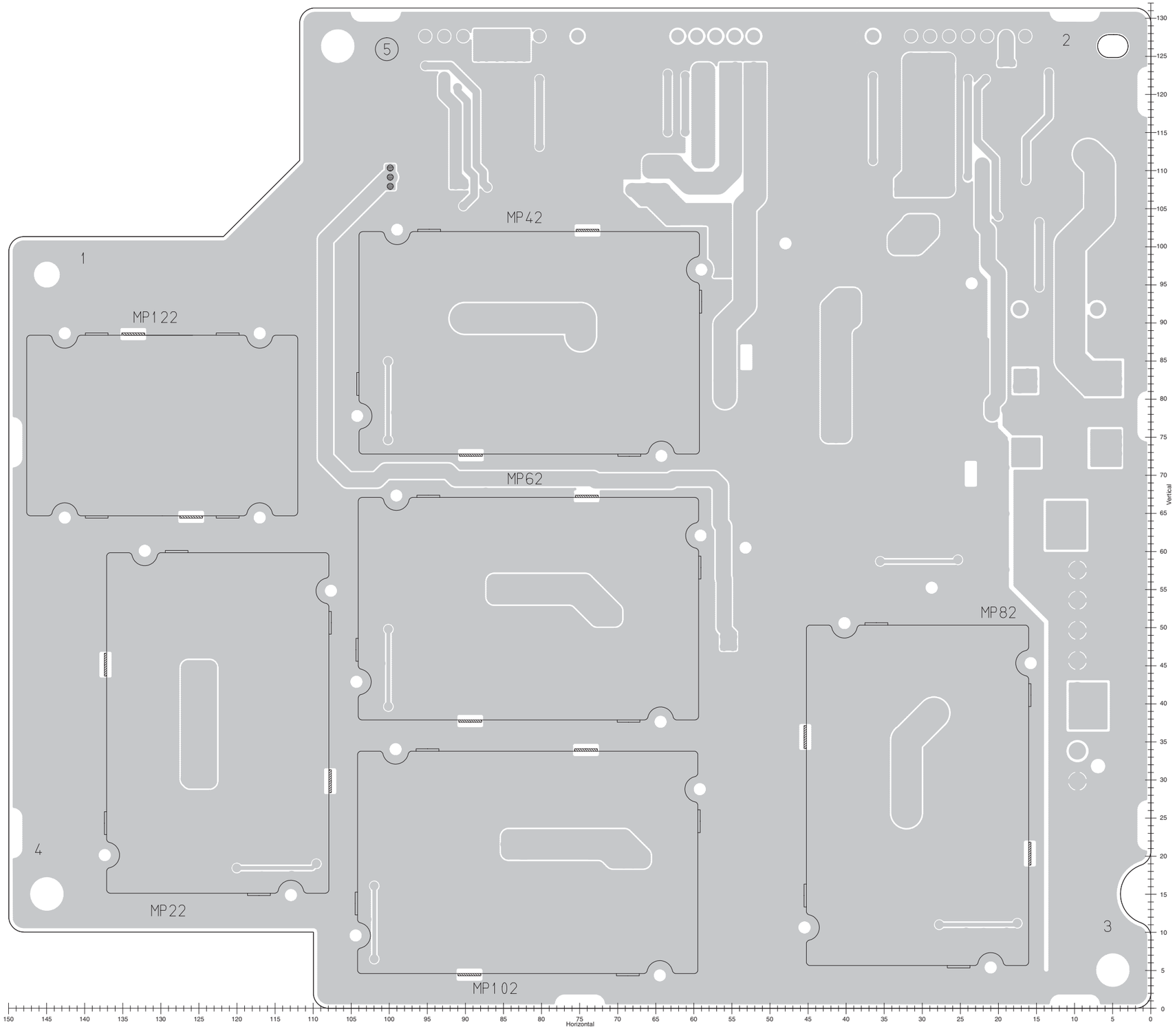

# SECTION 9 BLOCK DIAGRAMS

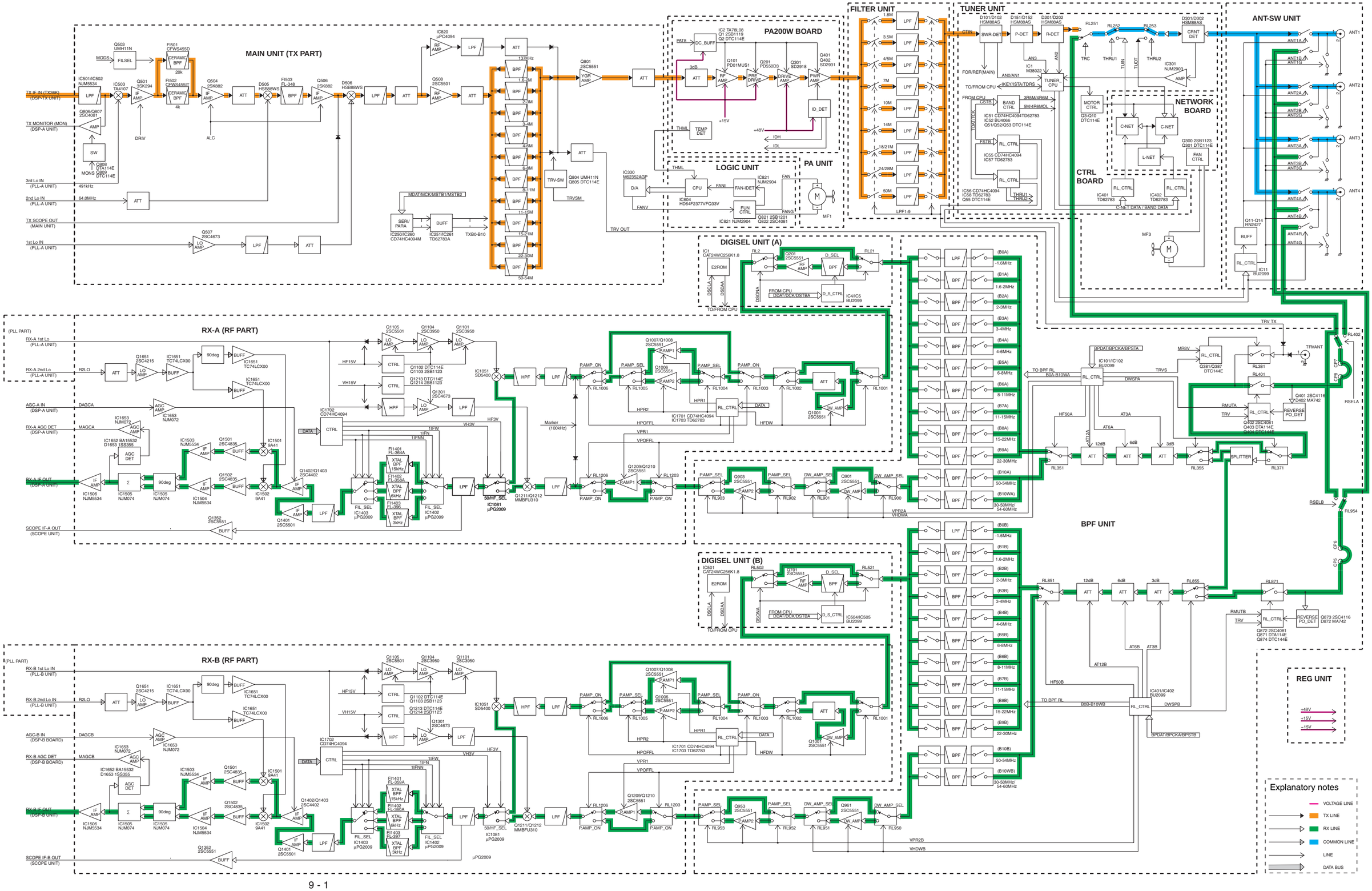

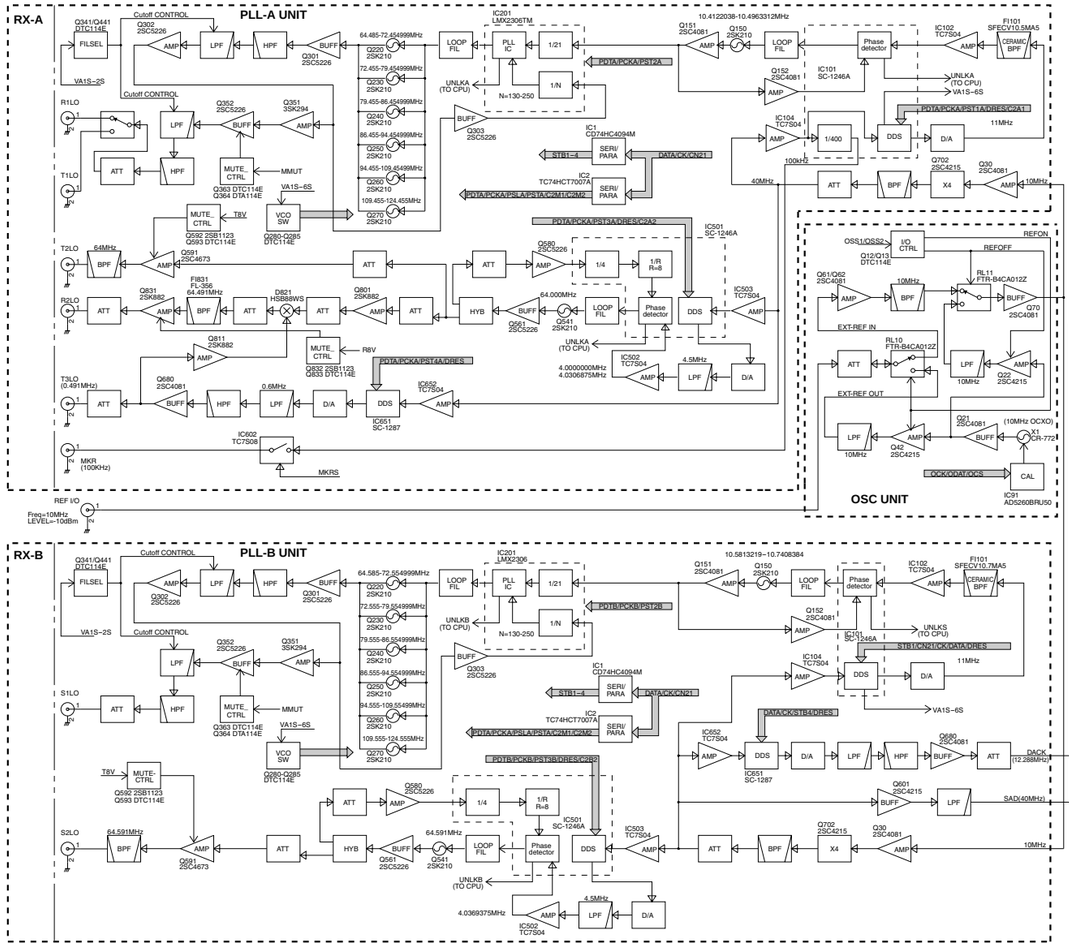
RX-A
PLL-A UNIT
Cutoff CONTROL
Q302 2SC5226
FILSEL
Q341/Q441 DTC114E
AMP
LPF
HPF
BUFF
Q301 2SC5226
VA1S–2S
R1LO
T1LO
T2LO
64MHz
R2LO
T3LO (0.491MHz)
MKR (100KHz)
MKRS
REF I/O
Freq=10MHz LEVEL=–10dBm
64.485-72.454999MHz
72.455-79.454999MHz
79.455-86.454999MHz
86.455-94.454999MHz
94.455-105.454999MHz
105.455-109.455MHz
109.455-124.455MHz
Q220 2SK210
Q230 2SK210
Q240 2SK210
Q250 2SK210
Q260 2SK210
Q270 2SK210
IC201 LMX2306TM
PLL IC
1/21
1/N
N=130-250
LOOP FIL
UNLKA (TO CPU)
10.412038-10.496331MHz
Q151 2SC4081
Q150 2SK210
Q152 2SC4081
IC101 SC-1246A
IC102 TC7S04
FI101 SFECV10.5MA5
CERAMIC BPF
PDTA/PCKA/PST2A
UNLKA (TO CPU)
VA1S–6S
PDTA/PCKA/PST1A/DRES/C2A1
11MHz
IC104 TC7S04
DDS
D/A
1/400
100kHz
40MHz
BUFF
Q303 2SC5226
IC1 CD74HC4094M
SERI/ PARA
STB1–4
DATA/CK/CN21
IC2 TC74HCT7007A
PDTA/PCKA/PSLA/PSTA/C2M1/C2M2
Q702 2SC4215
X4
Q30 2SC4081
10MHz
ATT
BPF
MUTE_ CTRL
MMUT
T8V
VCO SW
Q263 DTC114E
Q264 DTA114E
Q280-Q285 DTC114E
Q592 2SB1123
Q593 DTC114E
PDTA/PCKA/PST3A/DRES/C2A2
IC501 SC-1246A
Q580 2SC5226
1/4
1/R R=8
Q581 2SK210
IC503 TC7S04
Q661 2SC5226
64.000MHz
Q991 2SC4673
FI831 FL-356 64.491MHz
Q831 2SK882
D821 HSB88WS
Q801 2SK882
HYB
Q811 2SK882
R8V
MUTE_ CTRL
Q832 2SB1123
Q833 DTC114E
PDTA/PCKA/PST4A/DRES
Q680 2SC4081
0.6MHz
IC652 TC7S04
IC651 SC-1287
IC502 TC7S04
4.0000000MHz
4.0306875MHz
4.5MHz
UNLKA (TO CPU)
OSC UNIT
REFON
I/O CTRL
OSS1/OSS2
Q12/Q13 DTC114E
REFOFF
RL11 FTR-B4CA012Z
Q61/Q62 2SC4081
10MHz
EXT-REF IN
EXT-REF OUT
RL10 FTR-B4CA012Z
Q21 2SC4081
(10MHz OCXO)
X1 CR-772
OCK/ODAT/OCS
CAL
IC91 AD5260BRU50
RX-B
PLL-B UNIT
10.583219–10.7408384
PDTB/PCKB/PST2B
S1LO
S2LO
64.585-72.554999MHz
72.555-79.554999MHz
79.555-86.554999MHz
86.555-94.554999MHz
94.555-109.554999MHz
109.555-124.555MHz
64.591MHz
Q541 2SK210
Q561 2SC5226
PDTB/PCKB/PST3B/DRES/C2B2
4.0369375MHz
SAD(40MHz)
PACK (12.288MHz)
SCOPE UNIT
SCOPE IN/OUT
SDX0/SFSR1/SFSX1/SDR1/CLKR1
/RESET
TMS320C6711C
DSP
IC601
A/D
IC501 AD7650AST
IC404 μPC4094
IC403 μPC4094
IC401 μPC4094
IC405 NJM2904M
D401/D402 MA25111
AGC DET
AGC AMP
ATTV
D4 HSB88WS
D9 2SC5551
Q1 2SC4081
D1/D2 CPH5513
PIN-ATT
0–60dB
IC31 μPD2009
TX SCOPE (MAIN UNIT)
RX-A SIF IN (RX-A UNIT)
RX-B SIF IN (RX-B UNIT)
SSA
SSB
Q202 2SK882
Q201 2SK882
FI201 FL-357
XTAL BPF
BW=6KHz fc=45MHz
D101 HSB88WS
BW=1MHz
fc=64.455MHz
fc=220kHz
f=200kHz
40MHz
IC602/IC603 SN74LVC1G04DCK
18.455MHz–20.455MHz
Q101 2SC4673
LO AMP
IC801 LMX2306TM
IC803 TC74HCT7007A
LEVEL CONV
FROMCPU
SDAT/SCK/SSTB
1/448
1/400
Phase detector
LOOP FIL
Q831 2SC5226
Q841 2SC4081
44.8MHz
Q842 2SC5226
Q843 2SC5226
46MHz
Q301 2SC4673
3dB
Q720 2SC4406
IC820 AD9857AST
Q701 2SC4406
Q810 2SC4406
MUTE_ CTRL
SMUT
Q872 DTC114E
SDAT/SCK/SSTB/FSP/SYNC/IARESET
FROM CPU
DSP-TX BOARD
12.288MHz
IC821 NJM2172
MICPLAY
MICV
MMUT
IC201 TC4W53
IC460 TC4W53
IC230 μPC4570
MCPS
IC451 TC7S04
IC452 SN74LVC1GU04DCKR
CLK AMP
MCLK
/CAL
IC341/IC371 NJM5534
IC401 AKS394
IC551 AD1855
IC601/IC651 NJM5534
IC701 NJM5534
TO MAIN UNIT TX PART TX35K (TX IF36kHz OUT)
IC301 NJM5534
IC801/IC831 NJM5534
COMMAND IN
TSB/SCK/DSB/DX1/DFR1/DFX1
COMP METER OUT
DRESL
CTFL/DVOX (CW STASUS/VOX TO CPU)
DSKY(CW/RTTY KEYING) FROMCPU
IC871 NJM5534
X151 CR-754 (30MHz)
R+
R–
ANVOX
IC495 SN74LVC1G08DCKR
IN
S/P DIF
OUT
SPDI(TO LOGIC)
SPDO(FROM LOGIC)
A ACC(1) MOD
B ACC(1) MOD
MODVA
MODVB
MICREC
IC821 NJM2172
IC810 NJM2172
IC50 PS7122AL
Q50/Q51 DTC114TU
RL50 OMR-109F
EXRL1
EXRL2
SEND RELAY
RL-CTRL
IC1 NJM2058
DCAMP
A ACC(2) BAND
B ACC(2) BAND
BNDM
BNDS
A ACC(2) TRV
B ACC(2) TRV
Q7 2SC4081
TR/CTRL
TRVI
Q4 2SC4081
RTTYKEY
RTKI
A ACC(1) RTTY
B ACC(1) RTTY
A ACC(1) SQLS
B ACC(1) SQLS
Q1 DTC114TU
SQLCTRL
SQLAM
Q2 DTC114TU
SQLAS
KEY
A ACC(1) AF
B ACC(1) AF
Q8 2SC4081
Q9 2SC4081
IC4 NJM2172
IC3 TC4W53
IC5 TC4W53
IC2 μPC4570
A_AFA
B_AFA
AAFVA/(FROM CPU)
AAFVB/(FROM CPU)
Q6 DTA114E
Q5 2SD1619
SEND -CTRL
SENI(TO CPU)
ASND(FROM CPU)
A ACC(1) SEND
B ACC(1) SEND
A ACC(2) SEND
B ACC(2) SEND
Q52 2SC4081
SW
MUTEI
MEMORY KEYER /VOICE RECORD
MUTE
EPAD
METER OUT
METS
METM
ANTI VOX
IC550 TA79L05
–5V REG
–12V
IC450 SI-3012KS
1.2V REG
+3R3V
IC451 SI-3012KS
IC452 SI-3012KS
D1R2V_A
D1R2V_B
D1R2V_T
IC490 TC4W53
MON (TX MONITOR)
IFIN_A (RX-A)
MONS
DSP-A BOARD
SMET/RTTYM OUT
DSPCK/DSPSI/WX1A/DFRA/DFXA
IC1 TMS320C6713
IC701 NJM5534
IC601/IC651 NJM5534
IC551 AK4394
IC341/IC371 NJM5534
IC331 TC7W53
IC401 AKS394
IC501 μPC4570
AGC DET (RX-A)
IC771 BU9480
AGC OUT (RX-A)
TNDA(FM TONE) NSQA/VSQA(NOISE/VOICE SQL) RTDA(RTTY DEC)
DSP-B BOARD
IFIN_B (RX-B)
AGC OUT (RX-B)
CROSS
IC100 TC4W53
IC101 TC4W53
RXSREC
RXPREC
REF I/O
Freq=10MHz LEVEL=–10dBm
CHASSIS UNIT
INT SP
MAIN SP OUT
SUB SP OUT
SPON
MUTE
ATT
IC140 LA4485
RL140 NA-12W
RL141 NA-12W
PWR AMP
IC105 NJM2172
IC102 μPC4570
SQLM
SQL SW
Q100 2SJ144
Q101 2SJ144
SQLS
AFGVM1
AFGVM2
AFGVS1
AFGVS2
MBEEP
SBEEP
IC1 NJM2058
AFAMP
SW
AFO (MIC AF)
MAFS
SUB AF
MAIN AF
IC251/IC261/IC291/IC311 TD62783A
IC250/IC260/IC290/IC310 CD74HC4094M
SWITCH
SIGNAL
BUFF
SERI/ PARA
MDAT/MCK/MSTB1/MSTB2
IC330/IC331 M62352GP
CONTROL
D/A
MF1
MIC UNIT
R584
FUN CTRL
IC491 NJM2058
Q490 DTC114E
Q491 2SB1132
IC62 2SA1576
EXT ALC-AMP
A ACC(1) ALC
A ACC(2) ALC
B ACC(1) ALC
B ACC(2) ALC
ALC
ALC TO MAIN TX PART
IC60 NJM2058
SWR
ID
APC
REFV
IDHV
IDLV
IDL
FORV
POCV
POWSET
HFS/50MS/AMS
IC61 NJM2058
DCAMP
VDL
ALCL
MAIN UNIT
FRONT UNIT
MPHONE
PHONES
SPHONE
PHI(TO FRONT CPU)
IC182 TPA611A2DGN
IC181 TC4W53
IC180 NJM2172
PMIX
PHML1
PHML2
PHSL1
PHSL2
Explanatory notes
VOLTAGE LINE
TX LINE
RX LINE
COMMON LINE
LINE
DATA BUS

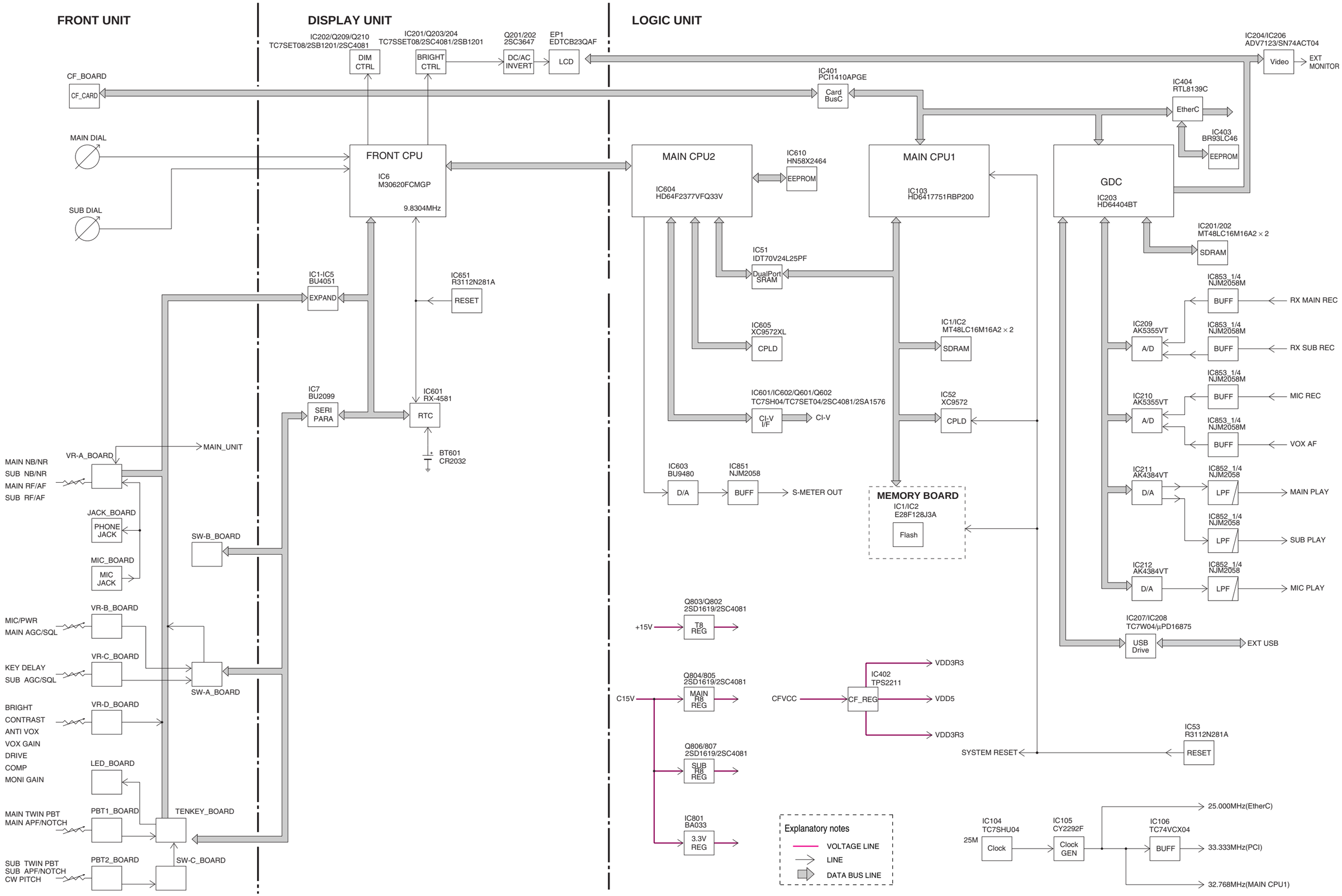
FRONT UNIT
DISPLAY UNIT
LOGIC UNIT
IC202/Q209/Q210
TC7SET08/2SB1201/2SC4081
DIM CTRL
IC201/Q203/204
TC7SSET08/2SC4081/2SB1201
BRIGHT CTRL
Q201/202
2SC3647
DC/AC INVERT
EP1
EDTCB23QAF
LCD
IC204/IC206
ADV7123/SN74ACT04
Video
EXT MONITOR
CF_BOARD
CF_CARD
IC401
PCI1410APGE
Card BusC
IC404
RTL8139C
EtherC
IC403
BR93LC46
EEPROM
MAIN DIAL
SUB DIAL
FRONT CPU
IC6
M30620FCMGP
9.8304MHz
MAIN CPU2
IC604
HD64F2377VFQ33V
IC610
HN58X2464
EEPROM
MAIN CPU1
IC103
HD6417751RBP200
GDC
IC203
HD64404BT
IC201/202
MT48LC16M16A2 × 2
SDRAM
IC1-IC5
BU4051
EXPAND
IC651
R3112N281A
RESET
IC51
IDT70V24L25PF
DualPort SRAM
IC853_1/4
NJM2058M
BUFF
RX MAIN REC
IC605
XC9572XL
CPLD
IC1/IC2
MT48LC16M16A2 × 2
SDRAM
IC209
AK5355VT
A/D
IC853_1/4
NJM2058M
BUFF
RX SUB REC
IC7
BU2099
SERI PARA
IC601
RX-4581
RTC
IC601/IC602/Q601/Q602
TC7SH04/TC7SET04/2SC4081/2SA1576
CI-V I/F
CI-V
IC52
XC9572
CPLD
IC853_1/4
NJM2058M
BUFF
MIC REC
IC210
AK5355VT
A/D
IC853_1/4
NJM2058M
BUFF
VOX AF
MAIN_UNIT
VR-A_BOARD
MAIN NB/NR
SUB NB/NR
MAIN RF/AF
SUB RF/AF
JACK_BOARD
PHONE JACK
MIC_BOARD
MIC JACK
SW-B_BOARD
IC603
BU9480
D/A
IC851
NJM2058
BUFF
S-METER OUT
MEMORY BOARD
IC1/IC2
E28F128J3A
Flash
IC211
AK4384VT
D/A
IC852_1/4
NJM2058
LPF
MAIN PLAY
IC852_1/4
NJM2058
LPF
SUB PLAY
IC212
AK4384VT
D/A
IC852_1/4
NJM2058
LPF
MIC PLAY
VR-B_BOARD
MIC/PWR
MAIN AGC/SQL
VR-C_BOARD
KEY DELAY
SUB AGC/SQL
SW-A_BOARD
VR-D_BOARD
BRIGHT
CONTRAST
ANTI VOX
VOX GAIN
DRIVE
COMP
MONI GAIN
LED_BOARD
MAIN TWIN PBT
MAIN APF/NOTCH
PBT1_BOARD
TENKEY_BOARD
SUB TWIN PBT
SUB APF/NOTCH
CW PITCH
PBT2_BOARD
SW-C_BOARD
BT601
CR2032
Q803/Q802
2SD1619/2SC4081
+15V
T8 REG
IC207/IC208
TC7W04/µPD16875
USB Drive
EXT USB
Q804/805
2SD1619/2SC4081
C15V
MAIN R8 REG
IC402
TPS2211
CFVCC
CF_REG
VDD3R3
VDD5
VDD3R3
Q806/807
2SD1619/2SC4081
SUB R8 REG
IC53
R3112N281A
RESET
SYSTEM RESET
IC801
BA033
3.3V REG
Explanatory notes
VOLTAGE LINE
LINE
DATA BUS LINE
IC104
TC7SHU04
25M
Clock
IC105
CY2292F
Clock GEN
IC106
TC74VCX04
BUFF
25.000MHz(EtherC)
33.333MHz(PCI)
32.768MHz(MAIN CPU1)

# SECTION 10 WIRING DIAGRAMS

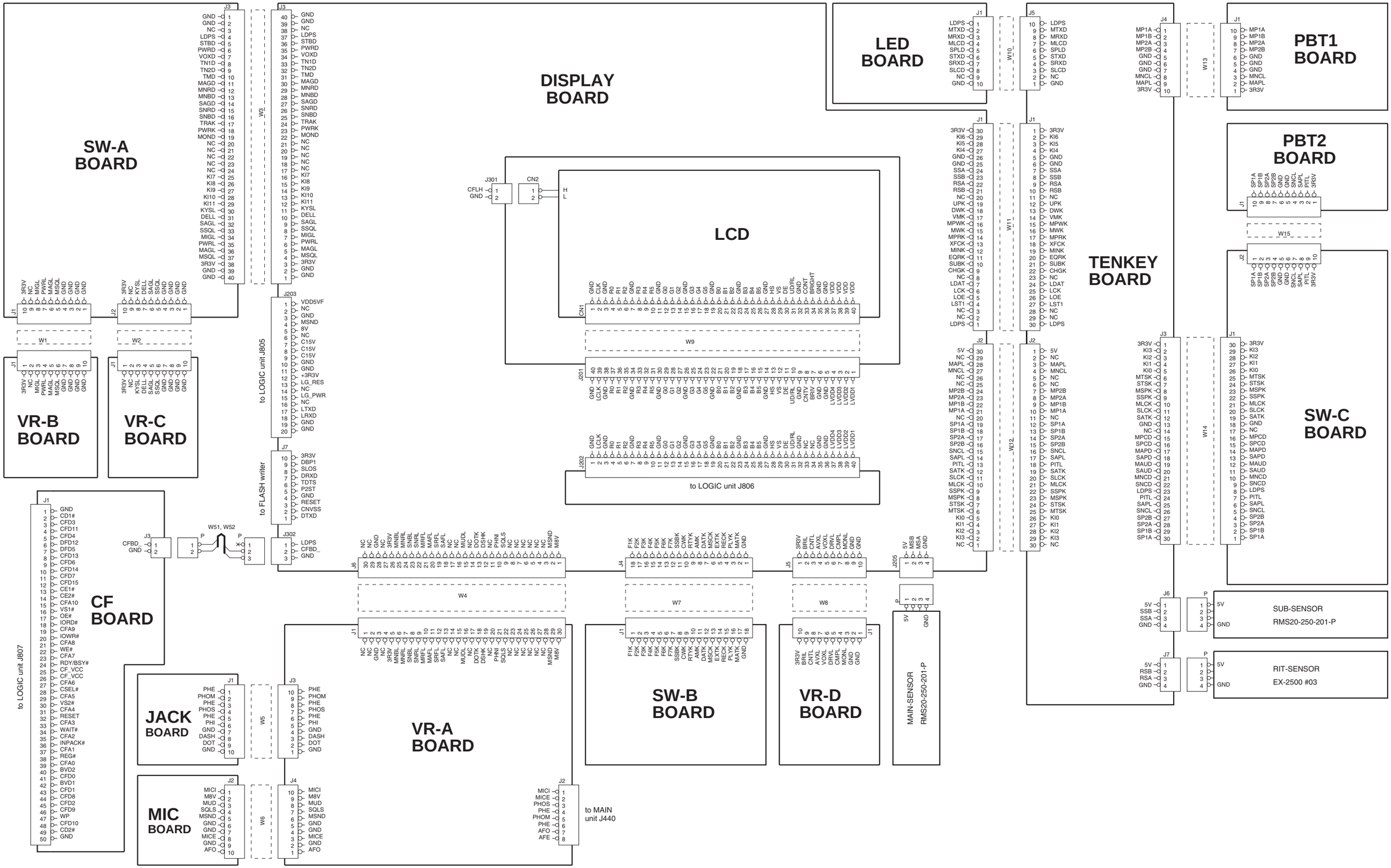

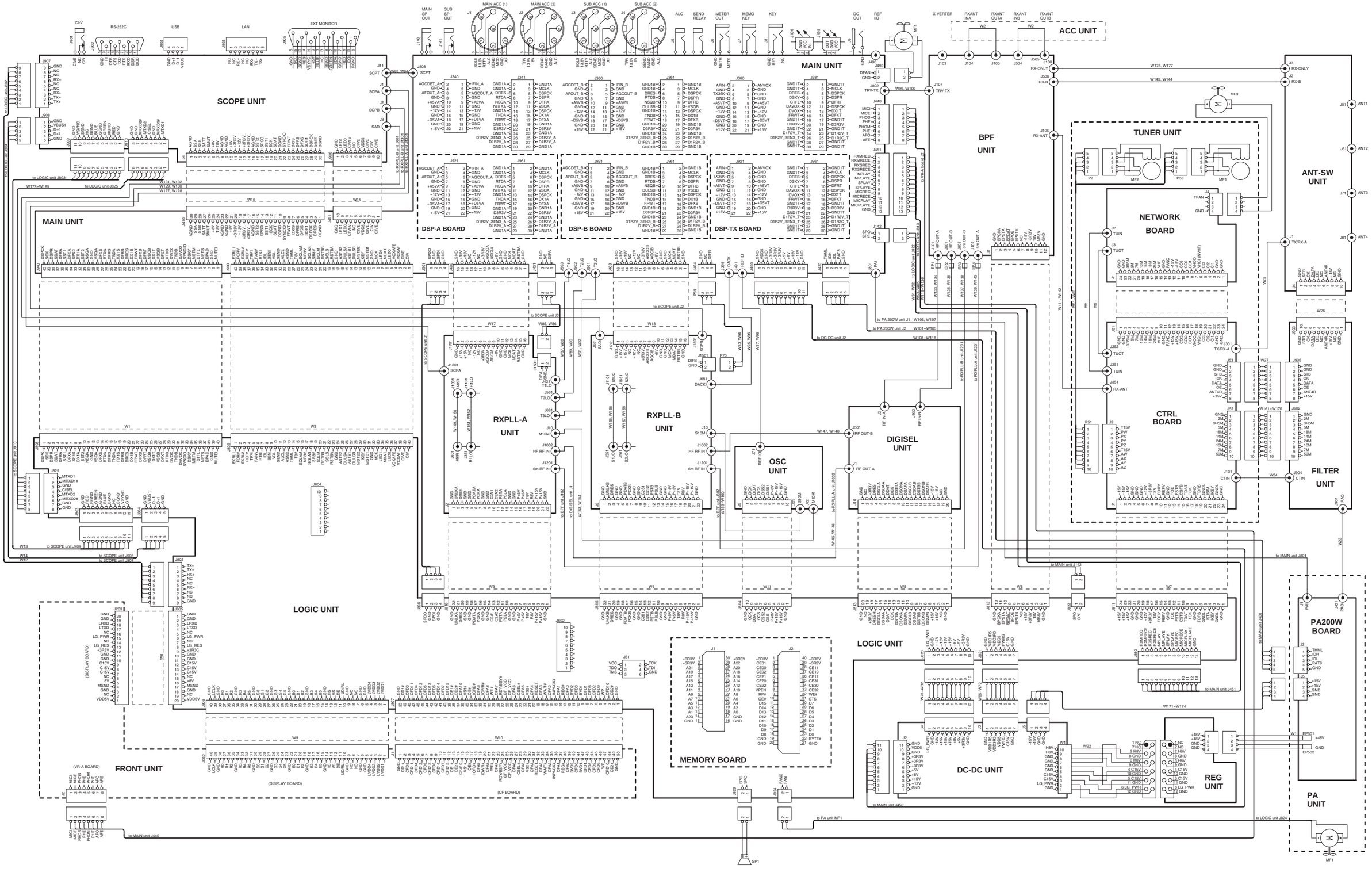
SCOPE UNIT
MAIN UNIT
DSP-A BOARD
DSP-B BOARD
DSP-TX BOARD
RXPLL-A UNIT
RXPLL-B UNIT
OSC UNIT
DIGISEL UNIT
BPF UNIT
ACC UNIT
TUNER UNIT
NETWORK BOARD
CTRL BOARD
FILTER UNIT
ANT-SW UNIT
LOGIC UNIT
FRONT UNIT
DC-DC UNIT
REG UNIT
PA200W BOARD
PA UNIT
MEMORY BOARD
(DISPLAY BOARD)
(CF BOARD)
(VR-A BOARD)
(DISPLAY-A BOARD)

# SECTION 11 VOLTAGE DIAGRAMS

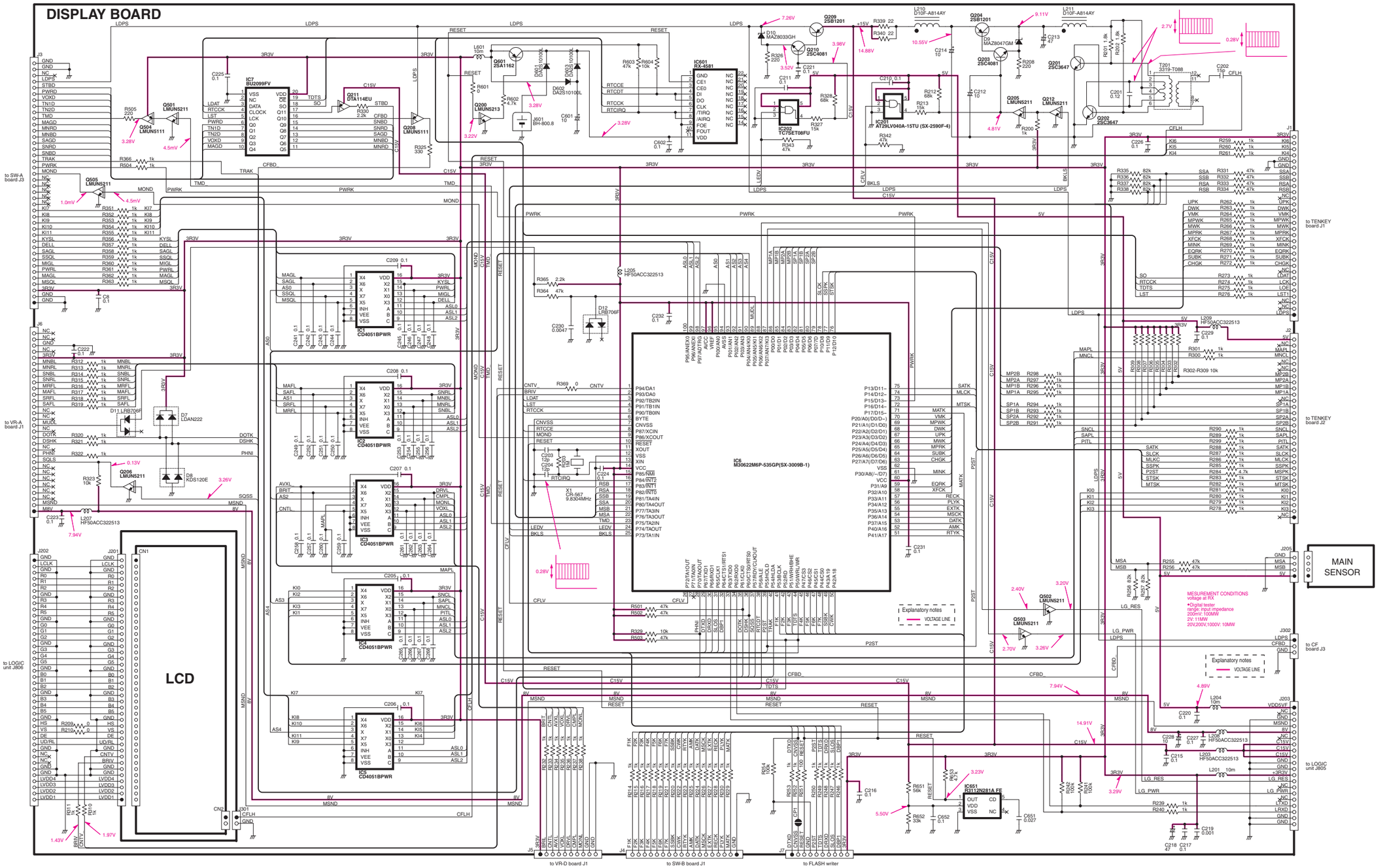

## VR-A BOARD

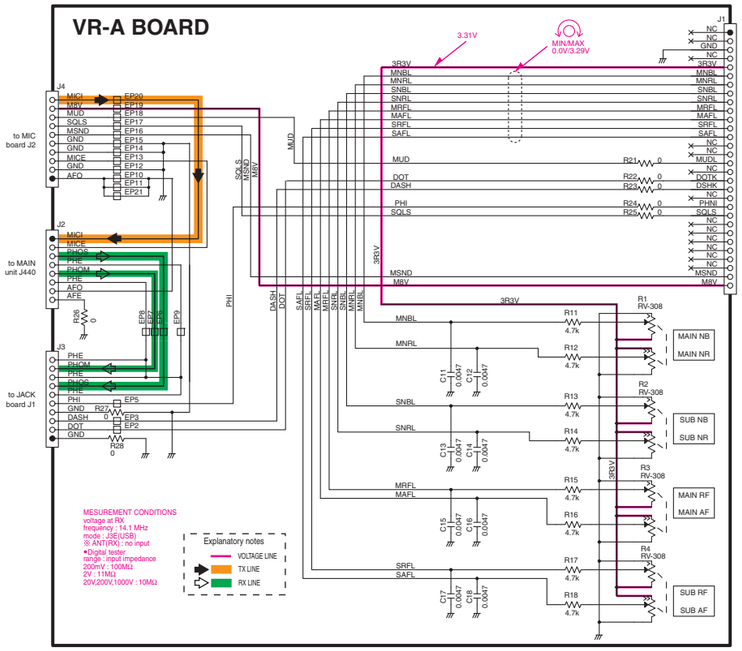


## VR-B BOARD

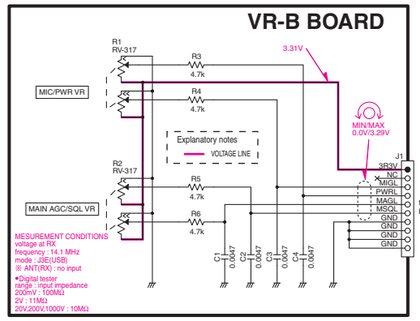


## VR-C BOARD

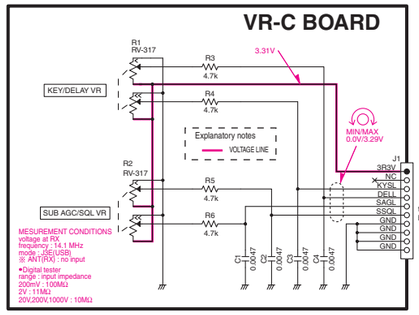


## VR-D BOARD

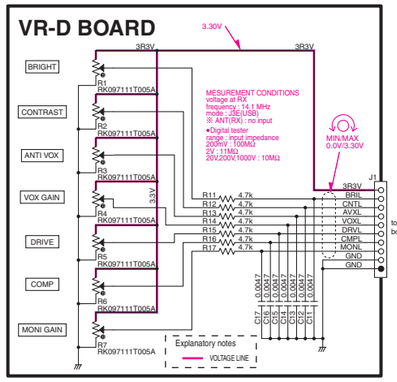


## SW-A BOARD

| | |
|---|---|
| OFF | 3.30V |
| TUNER SW | 0.000V |
| TIMER SW | 0.807V |
| VOX BK-IN SW | 1.662V |
| MONI SW | 2.52V |

| | |
|---|---|
| OFF | 3.30V |
| E | 0.000V |
| F | 0.799V |
| G | 1.657V |

| | |
|---|---|
| OFF | 3.30V |
| A | 0.000V |
| B | 0.807V |
| C | 1.663V |
| D | 2.52V |

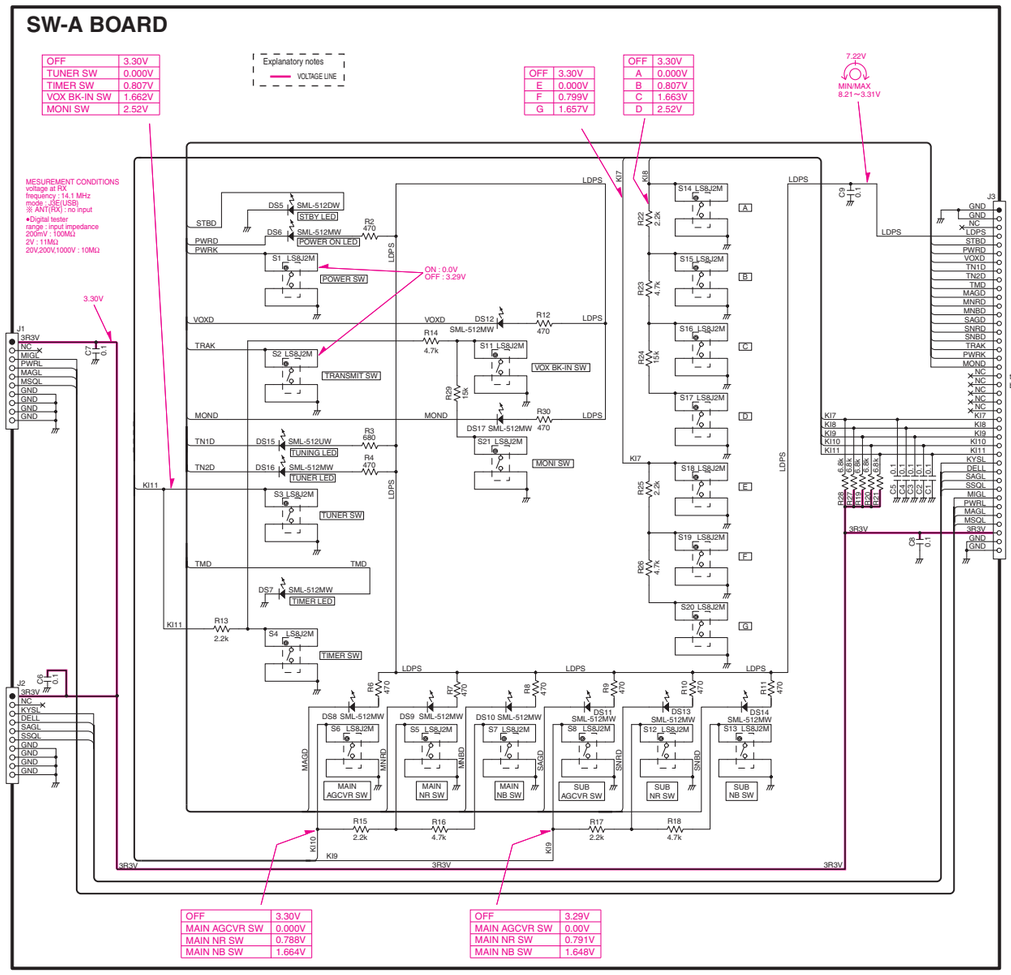


## SW-B BOARD

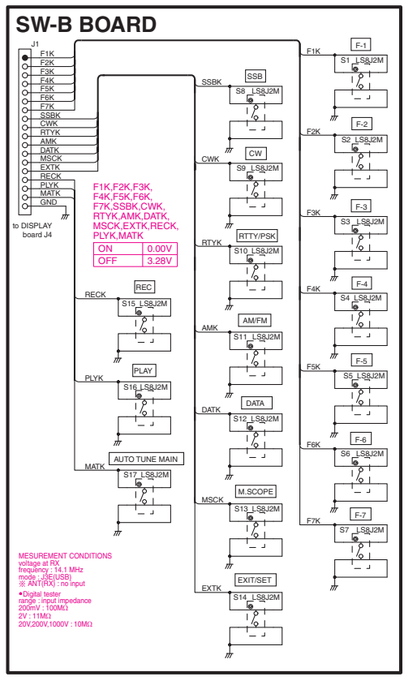


## SW-C BOARD

| | |
|---|---|
| OFF | 3.30V |
| MAIN FILTER | 0.00V |
| SUB FILTER | 0.802V |
| MAIN PBT | 1.667V |
| SUB PBT | 2.52V |

| | |
|---|---|
| OFF | 3.30V |
| MAIN DIGISEL | 0.00V |
| SUB DIGISEL | 0.805V |
| MAIN APF/TPF | 1.658V |
| SUB APF/TPF | 2.51V |

| | |
|---|---|
| OFF | 3.30V |
| CLEAR | 0.00V |
| DUAL WATCH | 0.803V |
| SPLIT | 1.653V |

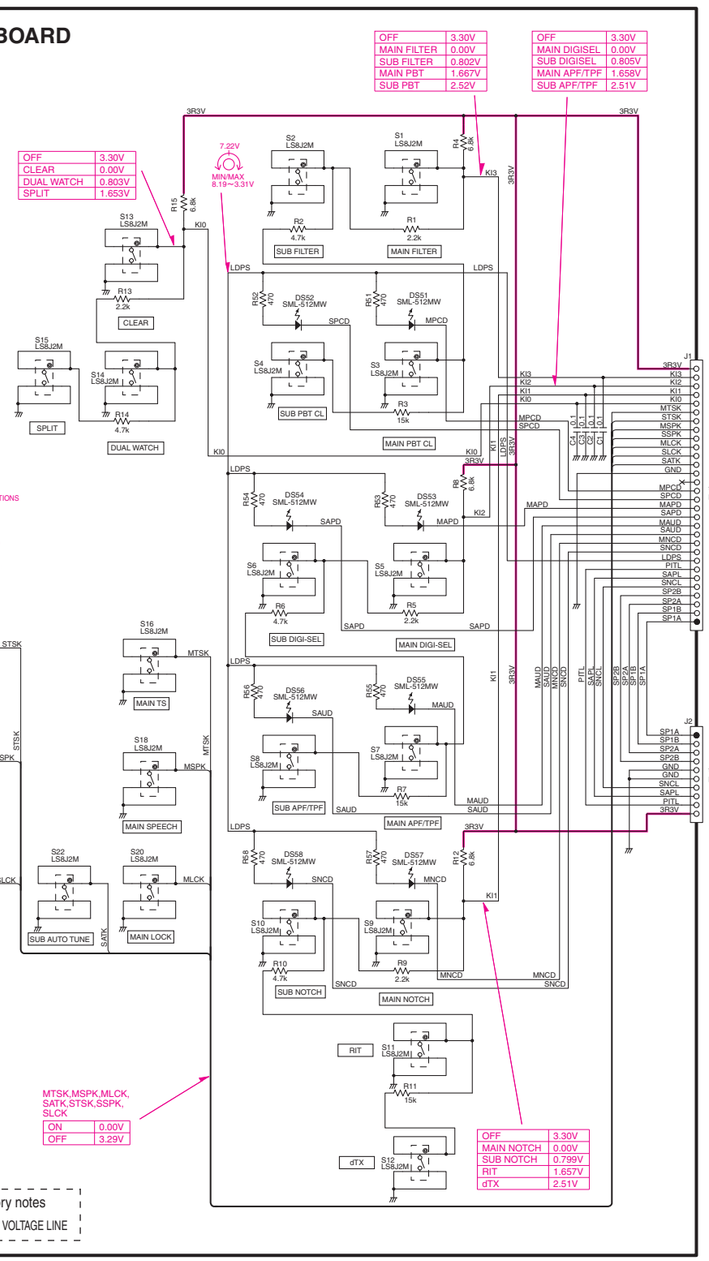

# TENKEY BOARD

RIT SENSOR

SUB SENSOR

| | turn left | | turn right |
|---|---|---|---|
| A,C | 5V / 0V | A,C | 5V / 0V |
| B,D | 5V / 0V | B,D | 5V / 0V |

| OFF | 3.30V |
|---|---|
| 1.8 (1) | 0.000V |
| 10 (4) | 0.803V |
| 21 (7) | 1.665V |
| GENT(.) | 2.51V |

| OFF | 3.30V |
|---|---|
| 3.5 (2) | 0.000V |
| 14 (5) | 0.808V |
| 24 (8) | 1.664V |
| 50 (0) | 2.52V |

| OFF | 3.30V |
|---|---|
| 1.8 (1) | 0.000V |
| 7 (3) | 0.812V |
| 18 (6) | 1.67V |
| F-INP(ENT) | 2.52V |

| UPK,DWK,VMK,MPWK,<br>MWK,MPRK,XFCK,MINK,<br>EQRK,SUBK,CHGK | |
|---|---|
| ON | 0.00V |
| OFF | 3.28V |

Explanatory notes

VOLTAGE LINE

MESUREMENT CONDITIONS
voltage at RX
frequency : 14.1 MHz
mode : J3E(USB)
※ ANT(RX) : no input

•Digital tester
range : input impedance
200mV : 100MΩ
2V : 11MΩ
20V,200V,1000V : 10MΩ

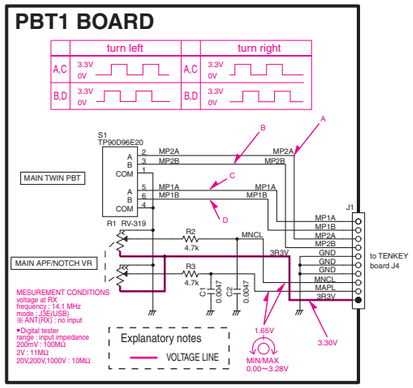
PBT1 BOARD
turn left
turn right
A,C
B,D
3.3V
0V
S1
TP90D96E20
MAIN TWIN PBT
MAIN APF/NOTCH VR
R1 RV-319
R2
4.7k
R3
4.7k
MP2A
MP2B
MP1A
MP1B
MNCL
3R3V
GND
MNCL
MAPL
3R3V
J1
to TENKEY board J4
C1 0.0047
C2 0.0047
MESUREMENT CONDITIONS
voltage at RX
frequency : 14.1 MHz
mode : J3E(USB)
※ ANT(RX) : no input
•Digital tester
range : input impedance
200mV : 100MΩ
2V : 11MΩ
20V,200V,1000V : 10MΩ
Explanatory notes
VOLTAGE LINE
1.65V
3.30V
MIN/MAX
0.00~3.28V

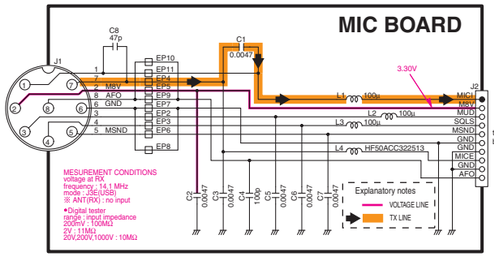
MIC BOARD
J1
J2
C8
47p
C1
0.0047
EP10
EP11
EP1
EP5
EP9
EP7
EP2
EP3
EP6
EP8
MBV
AFO
GND
MSND
3.30V
L1 100u
L2 100u
L3 100u
L4 HF50ACC322513
MIC
MBV
MUD
SQLS
MSND
GND
GND
MICE
GND
AFO
to VR-A board J4
C2 0.0047
C3 0.0047
C4 0.0047
C5 100p
C6 0.0047
C7 0.0047
C8 0.0047
MESUREMENT CONDITIONS
voltage at RX
frequency : 14.1 MHz
mode : J3E(USB)
※ ANT(RX) : no input
•Digital tester
range : input impedance
200mV : 100MΩ
2V : 11MΩ
20V,200V,1000V : 10MΩ
Explanatory notes
VOLTAGE LINE
TX LINE

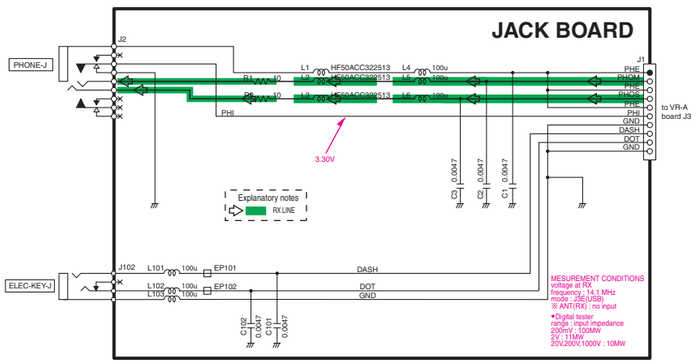
JACK BOARD
PHONE-J
J2
R1
10
R2
10
L1 HF50ACC322513
L2 HF50ACC322513
L4 100u
L5 100u
L6 100u
PHE
PHM
PHE
PHS
PHE
PHI
GND
DASH
DOT
GND
J1
to VR-A board J3
3.30V
C3 0.0047
C2 0.0047
C1 0.0047
Explanatory notes
RX LINE
ELEC-KEYJ
J102
L101 100u
L102 100u
L103 100u
EP101
EP102
DASH
DOT
GND
C102 0.0047
C101 0.0047
MESUREMENT CONDITIONS
voltage at RX
frequency : 14.1 MHz
mode : J3E(USB)
※ ANT(RX) : no input
•Digital tester
range : input impedance
200mV : 100MW
2V : 11MW
20V,200V,1000V : 10MW

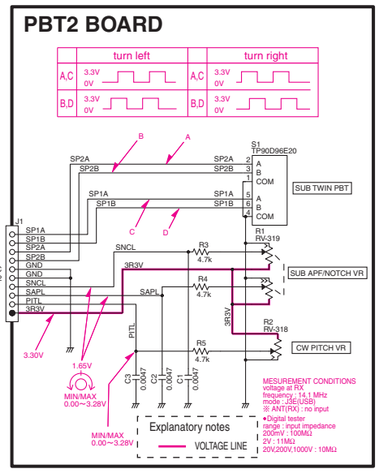
PBT2 BOARD
turn left
turn right
A,C
B,D
3.3V
0V
S1
TP90D96E20
SUB TWIN PBT
SUB APF/NOTCH VR
CW PITCH VR
R1 RV-319
R2 RV-318
R3
4.7k
R4
4.7k
R5
4.7k
SP2A
SP2B
SP1A
SP1B
SNCL
3R3V
SAPL
PITL
J1
to SW-C board J2
3.30V
1.65V
MIN/MAX
0.00~3.28V
C3 0.0047
C2 0.0047
C1 0.0047
MESUREMENT CONDITIONS
voltage at RX
frequency : 14.1 MHz
mode : J3E(USB)
※ ANT(RX) : no input
•Digital tester
range : input impedance
200mV : 100MΩ
2V : 11MΩ
20V,200V,1000V : 10MΩ
Explanatory notes
VOLTAGE LINE

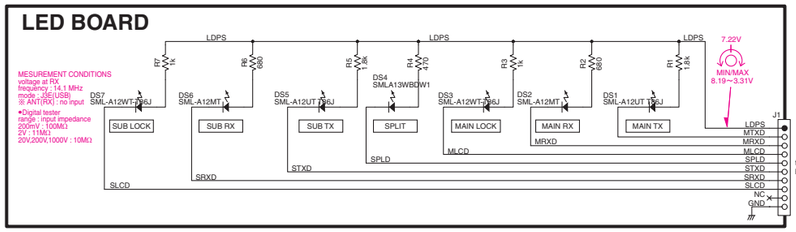
LED BOARD
LDPS
R7 1k
R6 680
R5 1.8k
R4 470
R3 1k
R2 680
R1 1.8k
7.22V
MIN/MAX
8.19~3.31V
DS7 SML-A12WT-T86J
DS6 SML-A12MT-T86J
DS5 SML-A12UT-T86J
DS4 SML-A13WBDW1
DS3 SML-A12WT-T86J
DS2 SML-A12MT-T86J
DS1 SML-A12UT-T86J
SUB LOCK
SUB RX
SUB TX
SPLIT
MAIN LOCK
MAIN RX
MAIN TX
MESUREMENT CONDITIONS
voltage at RX
frequency : 14.1 MHz
mode : J3E(USB)
※ ANT(RX) : no input
•Digital tester
range : input impedance
200mV : 100MΩ
2V : 11MΩ
20V,200V,1000V : 10MΩ
J1
LDPS
MTXD
MRXD
MLCD
SPLD
STXD
SRXD
SLCD
NC
GND
MRXD
MLCD
SPLD
STXD
SRXD
SLCD
to TENKEY board J5

# LOGIC UNIT (1)

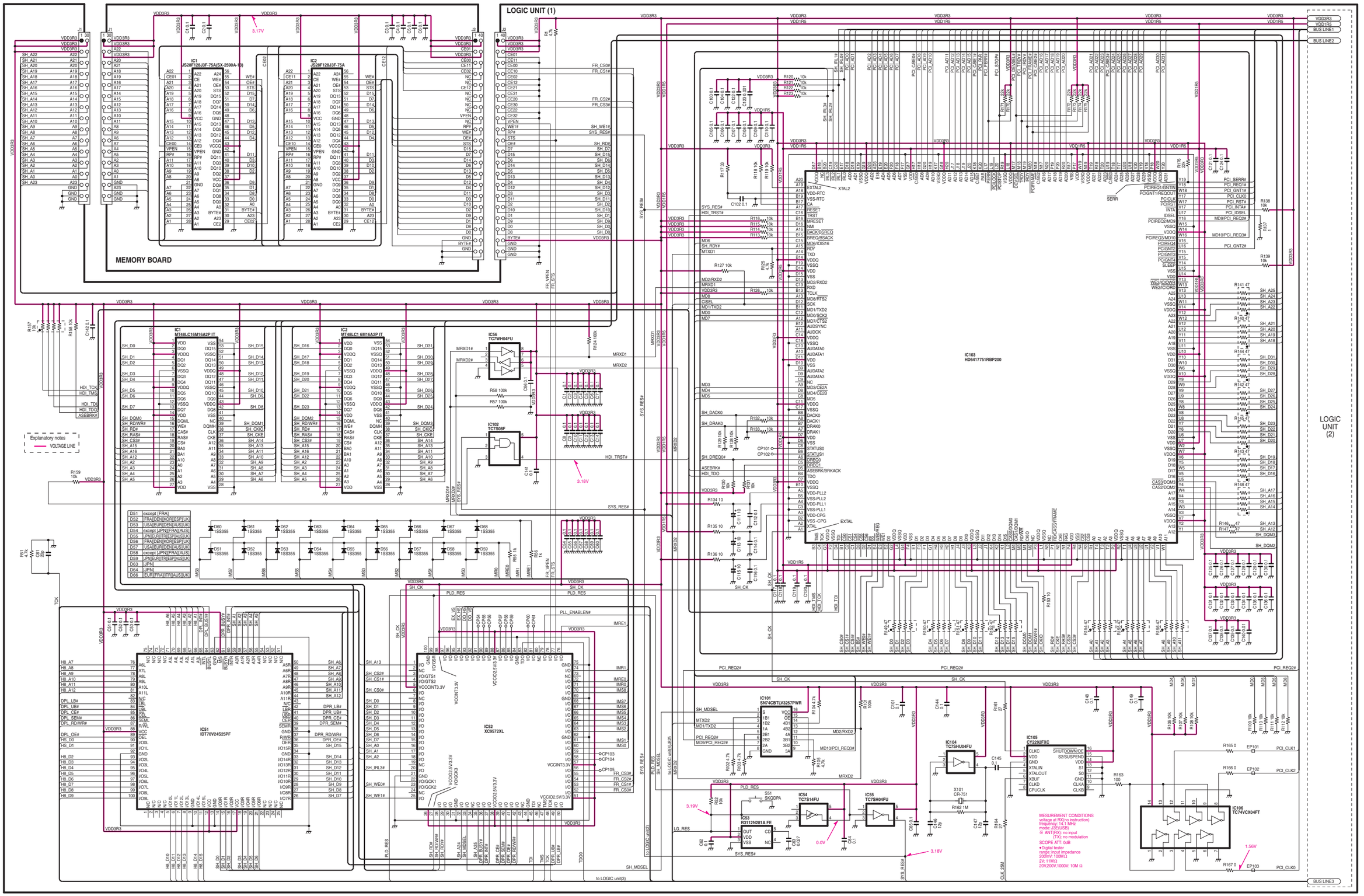

LOGIC UNIT (1)
MEMORY BOARD
LOGIC UNIT (2)
IC103 HD6417751RBP200
IC101 SN74CBTLV3257PWR
IC104 TC7SHU04FU
IC105 CY2292FXC
IC106 TC74VCX04FT
IC51 IDT70V24S25PF
IC52 XC9572XL
IC56 TC7WH04FU
IC102 TC7S08F
IC54 TC7S14FU
IC55 TC7SH04FU
IC53 R3112N281A FE
Explanatory notes
VOLTAGE LINE
MESUREMENT CONDITIONS

LOGIC UNIT (2)

LOGIC UNIT (1)

LOGIC UNIT (3)

IC201 MT48LC16M16A2P IT

IC202 MT48LC16M16A2P IT

IC203 HD64404BT

IC204 ADV7123KST50

IC205 TC7SZ04F

IC206 SN74ACT04PWR

Explanatory notes
VOLTAGE LINE

LOGIC UNIT (3)

LOGIC UNIT (2)

LOGIC UNIT (4)

IC401 PCI1410APGE

IC402 TPS2211AIDBR

IC403 BR93LC46FW

IC404 RTL8139C+

IC504 HD64F2377VFQ33V

IC505 XC9572XL

IC603 BU9480F

IC610 BR24T64FVT-W

IC207 IC7W04F

IC208 IPD15875G

IC209 AK5355VT

IC210 AK5355VT

IC211 AK4384VT

IC212 AK4384VT

IC601 2SC4081

IC602 TC7SET04FU

IC621 TC7SH04FU

D601 1SS355

G601 2SC4081

G602 L2SA1576AR

X601 CR-755

MESUREMENT CONDITIONS
voltage at RX(no instruction)
frequency: 14.1 MHz
mode: J3E(USB)
※ ANT(RX): no input
(TX): no modulation
SCOPE ATT: 0dB
•Digital tester
ranje: input impedance
200mV: 10MΩ
2V: 11MΩ
20V,200V,1000V: 10M Ω

Explanatory notes
VOLTAGE LINE

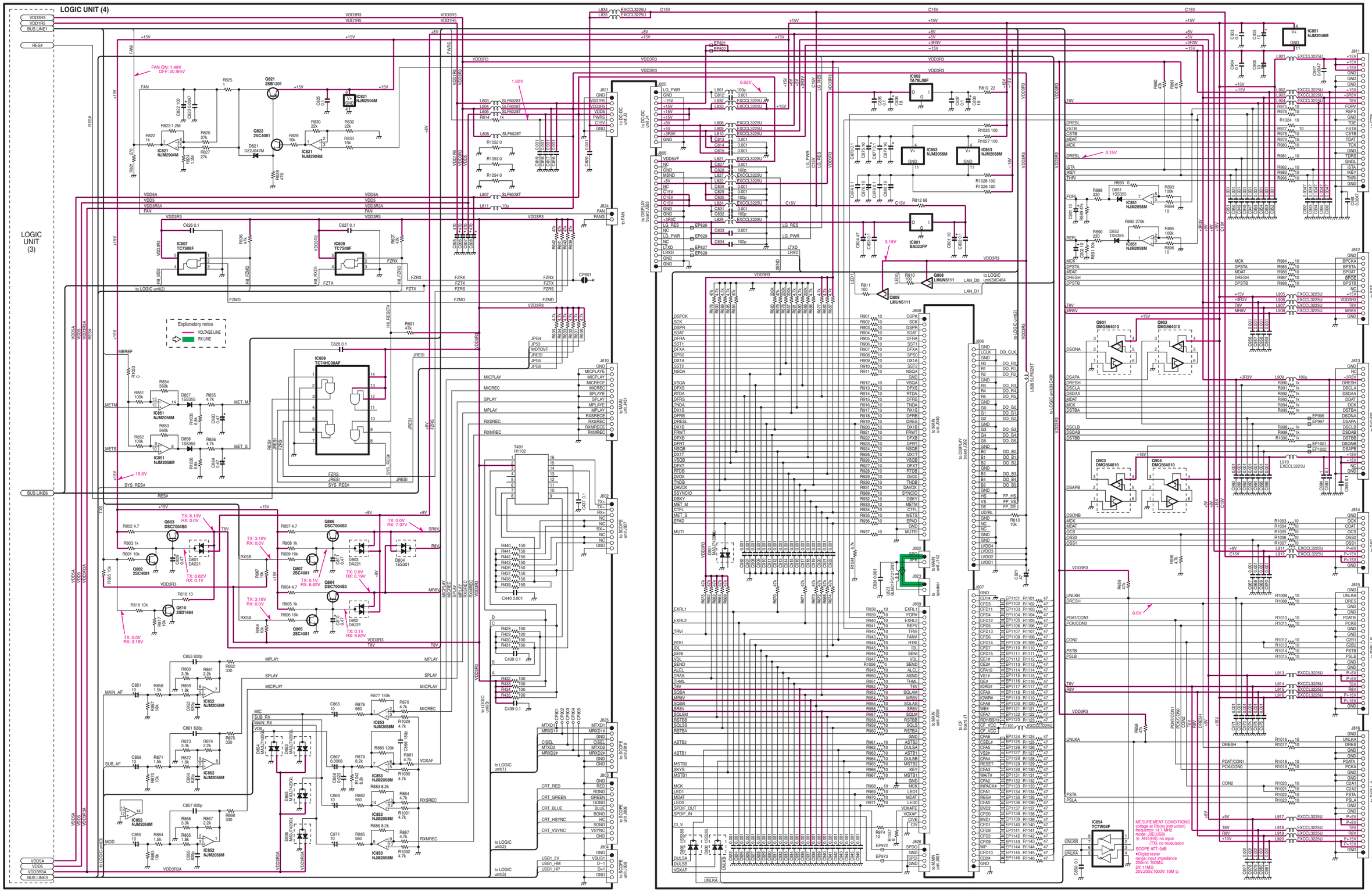
LOGIC UNIT (4)
LOGIC UNIT (3)
Explanatory notes
VOLTAGE LINE
RX LINE
MESUREMENT CONDITIONS
voltage at RX(no instruction)
frequency: 14.1 MHz
mode: JSE(USB)
※ ANT(RX): no input
(TX): no modulation
SCOPE ATT: 0dB
•Digital tester
range: input impedance
200mV: 100MΩ
2V: 11MΩ
20V,200V,1000V: 10M Ω

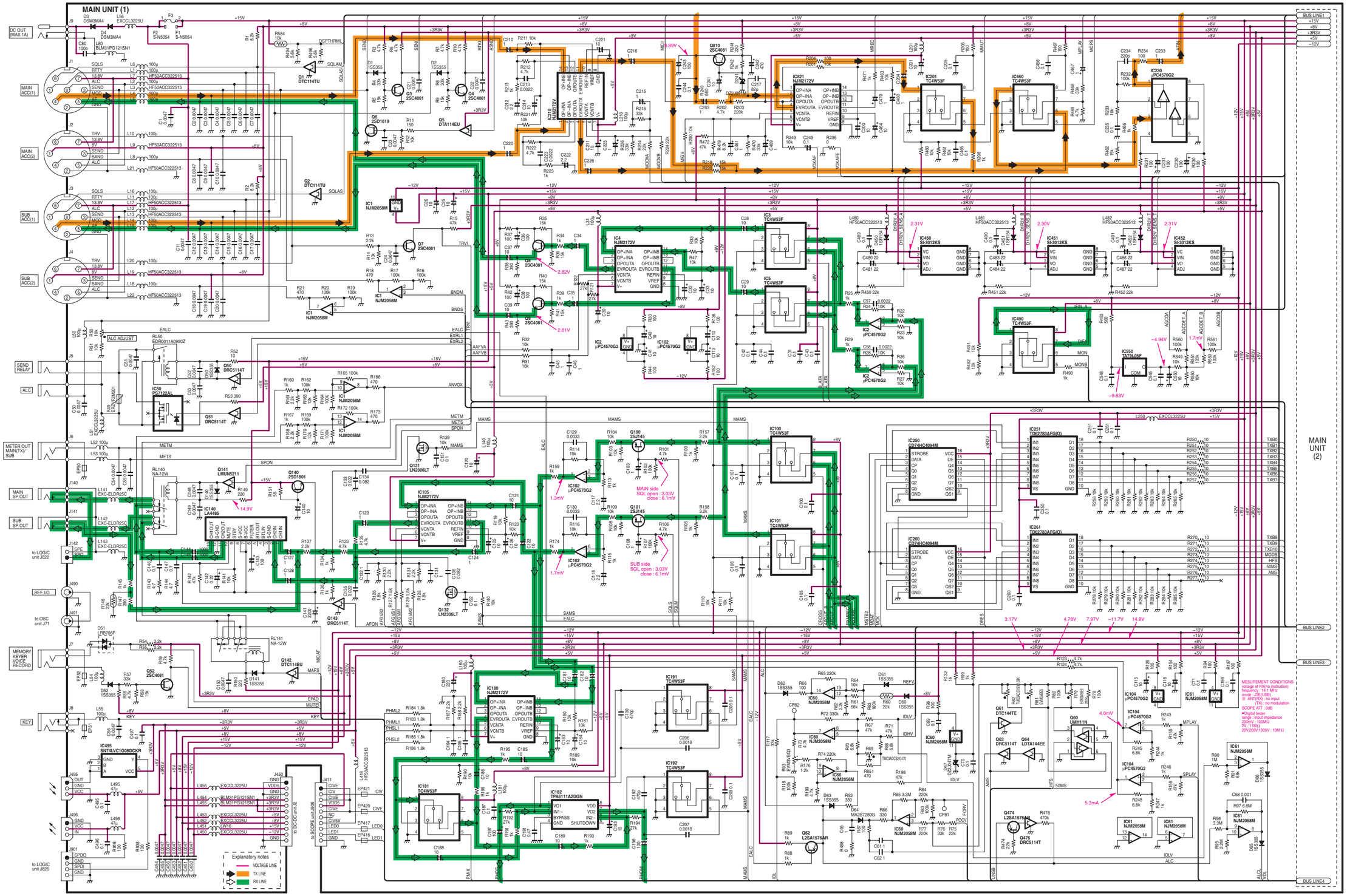
MAIN UNIT (1)
MAIN UNIT (2)
DC OUT (MAX 1A)
MAIN ACC(1)
MAIN ACC(2)
SUB ACC(1)
SUB ACC(2)
SEND RELAY
ALC
METER OUT MAIN(TX)/ SUB
MAIN SP OUT
SUB SP OUT
to LOGIC unit J822
REF I/O
to OSC unit J71
MEMORY KEYER VOICE RECORD
KEY
to LOGIC unit J826
BUS LINE1
BUS LINE2
BUS LINE3
BUS LINE4
Explanatory notes
VOLTAGE LINE
TX LINE
RX LINE
MAIN side SQL open : 3.03V close : 6.1mV
SUB side SQL open : 3.03V close : 6.1mV
MESUREMENT CONDITIONS
voltage at RX(no instruction)
frequency : 14.1 MHz
mode : JSE(USB)
※ ANT(RX) : no input
(TX) : no modulation
SCOPE ATT : 0dB
•Digital tester
range : input impedance
200mV : 100MΩ
2V : 11MΩ
20V,200V,1000V : 10M Ω

# MAIN UNIT (2)

MAIN UNIT (1)

MAIN UNIT (3)

BUS LINE1 / BUS LINE2 / BUS LINE3 / BUS LINE4

Explanatory notes
- VOLTAGE LINE
- TX LINE

MESUREMENT CONDITIONS
voltage at RX(no instruction)
frequency : 14.1 MHz
mode : J3E(USB)
⊞: ANT(RX) : no input
(TX) : no modulation
SCOPE ATT : 0dB
• Digital tester
range : Input impedance
200mV : 10MΩ
2V : 11MΩ
20V,200V,1000V : 10M Ω

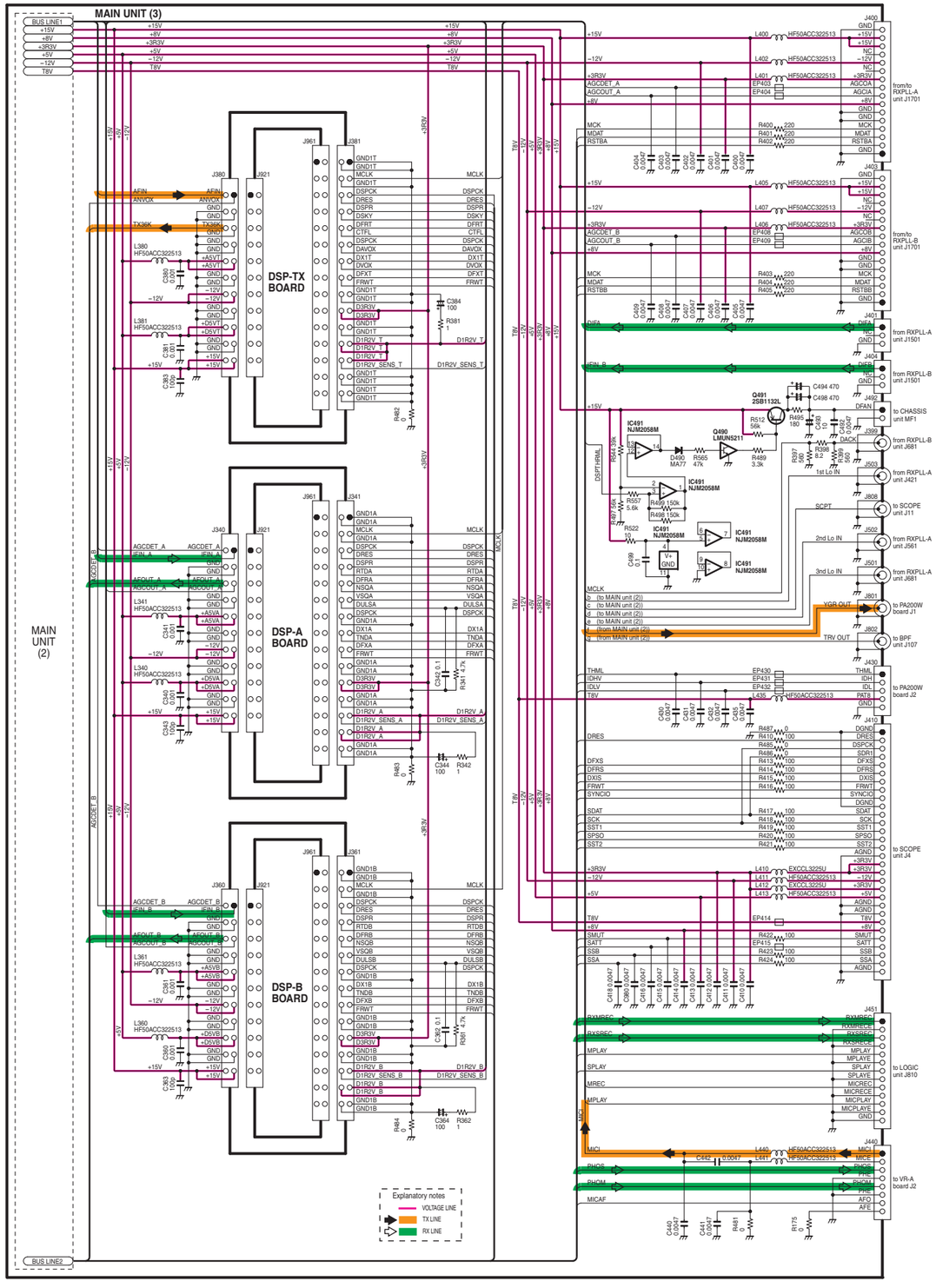
MAIN UNIT (3)
MAIN UNIT (2)
DSP-TX BOARD
DSP-A BOARD
DSP-B BOARD
BUS LINE1
BUS LINE2
Explanatory notes
VOLTAGE LINE
TX LINE
RX LINE
from/to RXPLL-A unit J1701
from/to RXPLL-B unit J1701
from RXPLL-A unit J1501
from RXPLL-B unit J1501
to CHASSIS unit MF1
from RXPLL-B unit J681
from RXPLL-A unit J421
to SCOPE unit J11
from RXPLL-A unit J561
from RXPLL-A unit J681
to PA200W board J1
to BPF unit J107
to PA200W board J2
to SCOPE unit J4
to LOGIC unit J810
to VR-A board J2
IC491 NJM2058M
Q491 2SB1132L
Q490 LMUN5211
D490 MA77
HF50ACC322513
EXCCL3225U

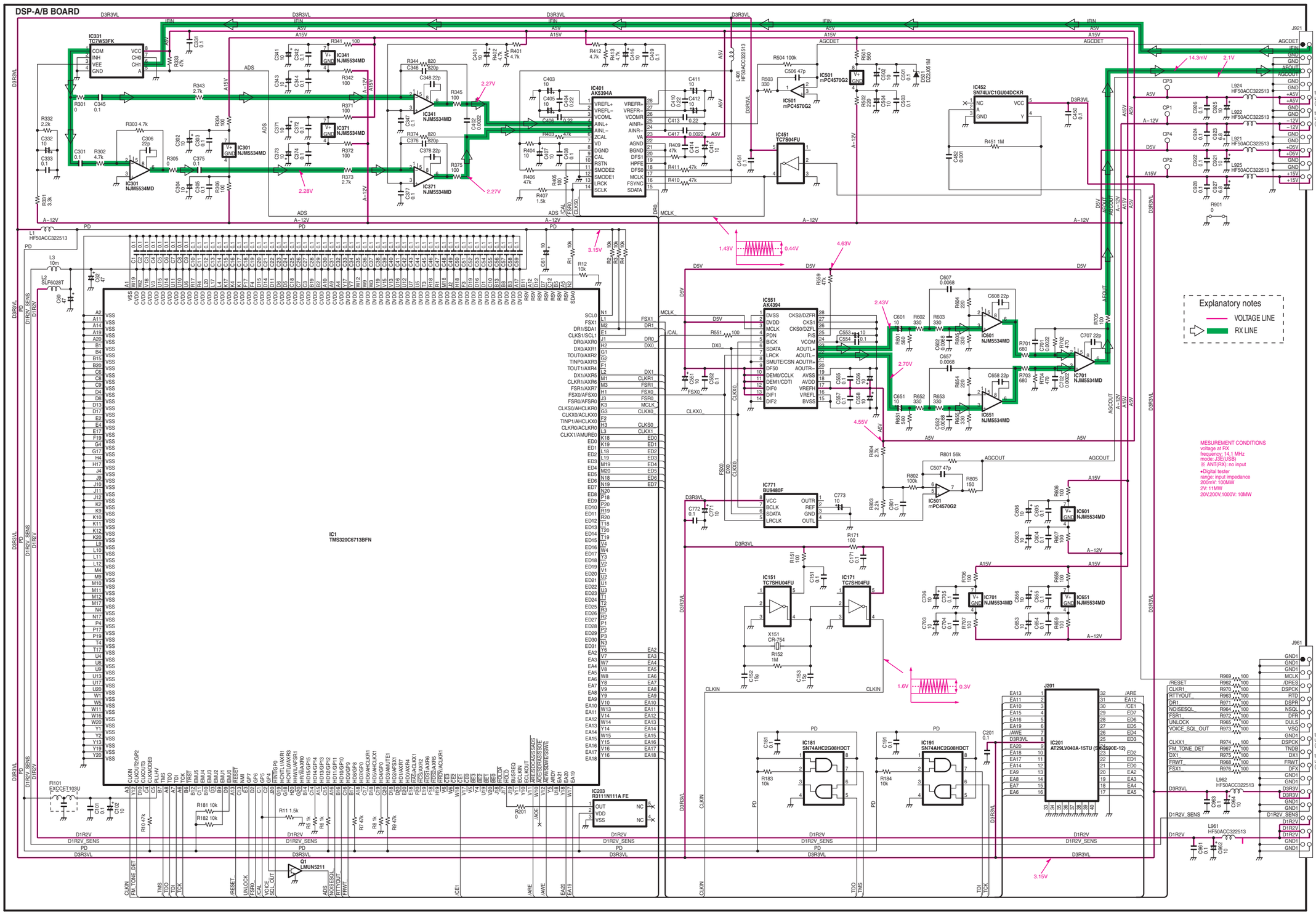
DSP-A/B BOARD
Explanatory notes
VOLTAGE LINE
RX LINE
MESUREMENT CONDITIONS
voltage at RX
frequency: 14.1 MHz
mode: J3E(USB)
※ ANT(RX): no input
•Digital tester
range: input impedance
200mV: 100MW
2V: 11MW
20V,200V,1000V: 10MW
IC1
TMS320C6713BFN
IC401
AK5394A
IC551
AK4394
IC201
AT29LV040A-15TU (SK2590E-12)
IC203
R3111N111A FE
IC451
TC7S04FU
IC452
SN74LVC1GU04DCKR
IC501
mPC4570G2
IC601
NJM5534MD
IC651
NJM5534MD
IC701
NJM5534MD
IC771
BU9480F
IC151
TC7SHU04FU
IC171
TC7SH04FU
IC181
SN74AHC2G08HDCT
IC191
SN74AHC2G08HDCT
IC331
TC7W53FK
IC341
NJM5534MD
IC371
NJM5534MD
IC301
NJM5534MD
Q1
LMUN5211
J201
J921
J961
to MAIN unit J340 (DSP-A)
to MAIN unit J360 (DSP-B)
to MAIN unit J341 (DSP-A)
to MAIN unit J361 (DSP-B)

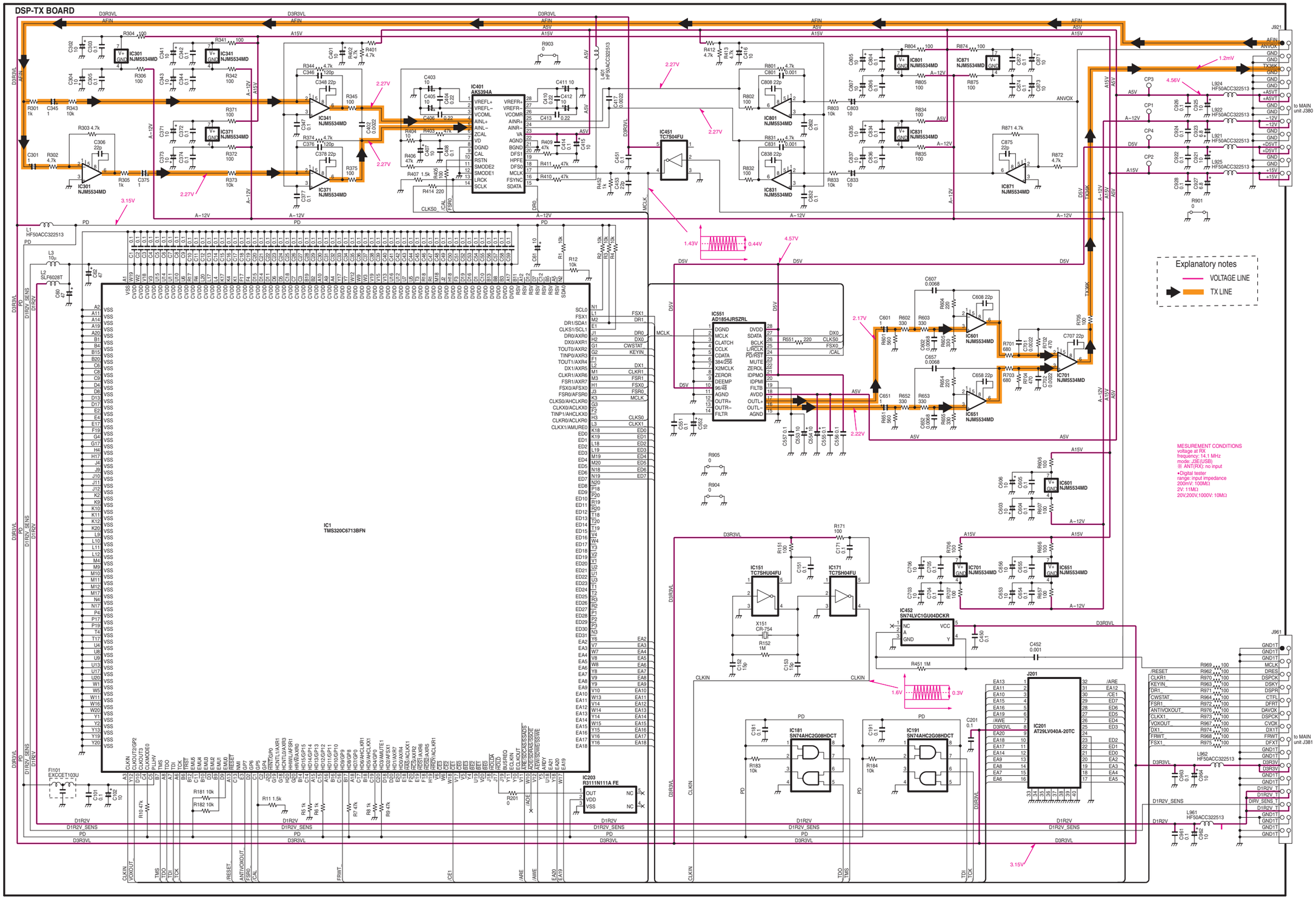
DSP-TX BOARD
Explanatory notes
VOLTAGE LINE
TX LINE
MESUREMENT CONDITIONS
voltage at RX
frequency: 14.1 MHz
mode: J3E(USB)
※ ANT(RX): no input
•Digital tester
range: input impedance
200mV: 100MΩ
2V: 11MΩ
20V,200V,1000V: 10MΩ
IC1
TMS320C6713BFN
IC401
AK5394A
IC451
TC7S04FU
IC551
AD1854JRSZRL
IC151
TC7SHU04FU
IC171
TC7SH04FU
IC452
SN74LVC1GU04DCKR
IC181
SN74AHC2G08HDCT
IC191
SN74AHC2G08HDCT
IC201
AT29LV040A-20TC
IC203
R3111N111A FE
J201
J921
J961
to MAIN unit J380
to MAIN unit J381

# SCOPE UNIT (1)

| | MAIN | SUB |
|---|---|---|
| A | 6.46V | 0.0V |
| B | 0.0V | 6.47V |
| C | 0.0V | 5.68V |
| D | 5.68V | 0.0V |
| E | 2.29V | 14.55V |
| F | 14.55V | 2.28V |

Explanatory notes
VOLTAGE LINE

MESUREMENT CONDITIONS
voltage at RX(no instruction)
frequency: 14.1 MHz
mode: J3E(USB)
※ ANT(RX): no input
(TX): no modulation
SCOPE ATT: 0dB
•Digital tester
range: input impedance
200mV: 100MΩ
2V: 11MΩ
20V,200V,1000V: 10MΩ

from RXPLL-A unit J1301
from RXPLL-B unit J1301
from RXPLL-B unit J601
from MAIN unit J808
to MAIN unit J410
TO ADC IN

SCOPE UNIT (2)
SCOPE UNIT (3)

## SCOPE UNIT (2)

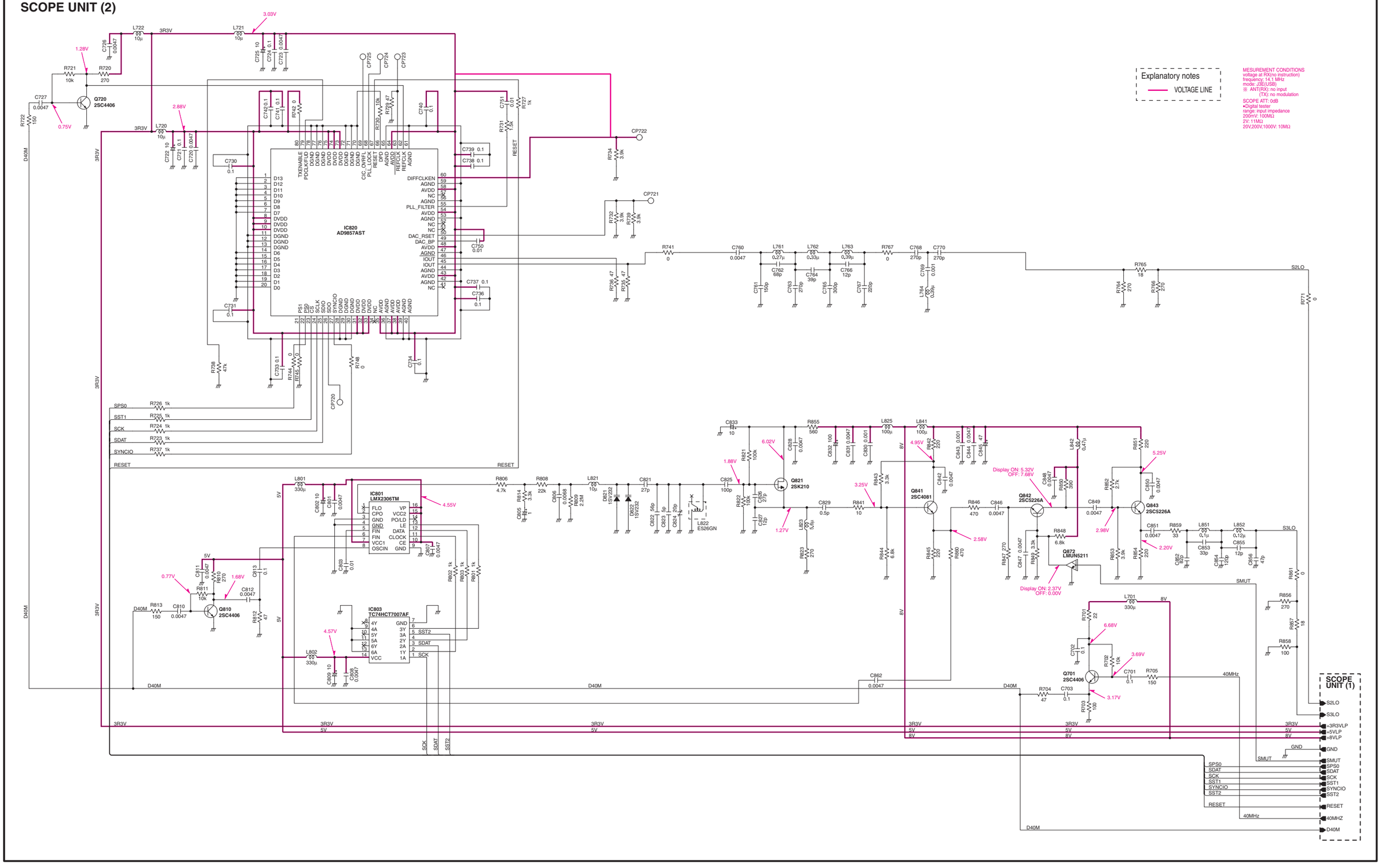
Explanatory notes
VOLTAGE LINE
MESUREMENT CONDITIONS
voltage at RX(no instruction)
frequency: 14.1 MHz
mode: LSB(USB)
※ ANT(RX): no input
(TX): no modulation
SCOPE ATT: 0dB
•Digital tester
range, input impedance
200mV: 100MΩ
2V: 11MΩ
20V,200V,1000V: 10MΩ
IC820
AD9857AST
IC801
LMX2306TM
IC803
TC74HCT7007AF
Q720
2SC4406
Q810
2SC4406
Q821
2SK210
Q841
2SC4081
Q842
2SC5226A
Q843
2SC5226A
Q872
LMUN5211
Q701
2SC4406
L822
E526GN
SCOPE UNIT (1)
S2LO
S3LO
+3R3VLP
+5VLP
+8VLP
GND
SMUT
SPS0
SDAT
SCK
SST1
SYNCIO
SST2
RESET
40MHZ
D40M

## SCOPE UNIT (3)

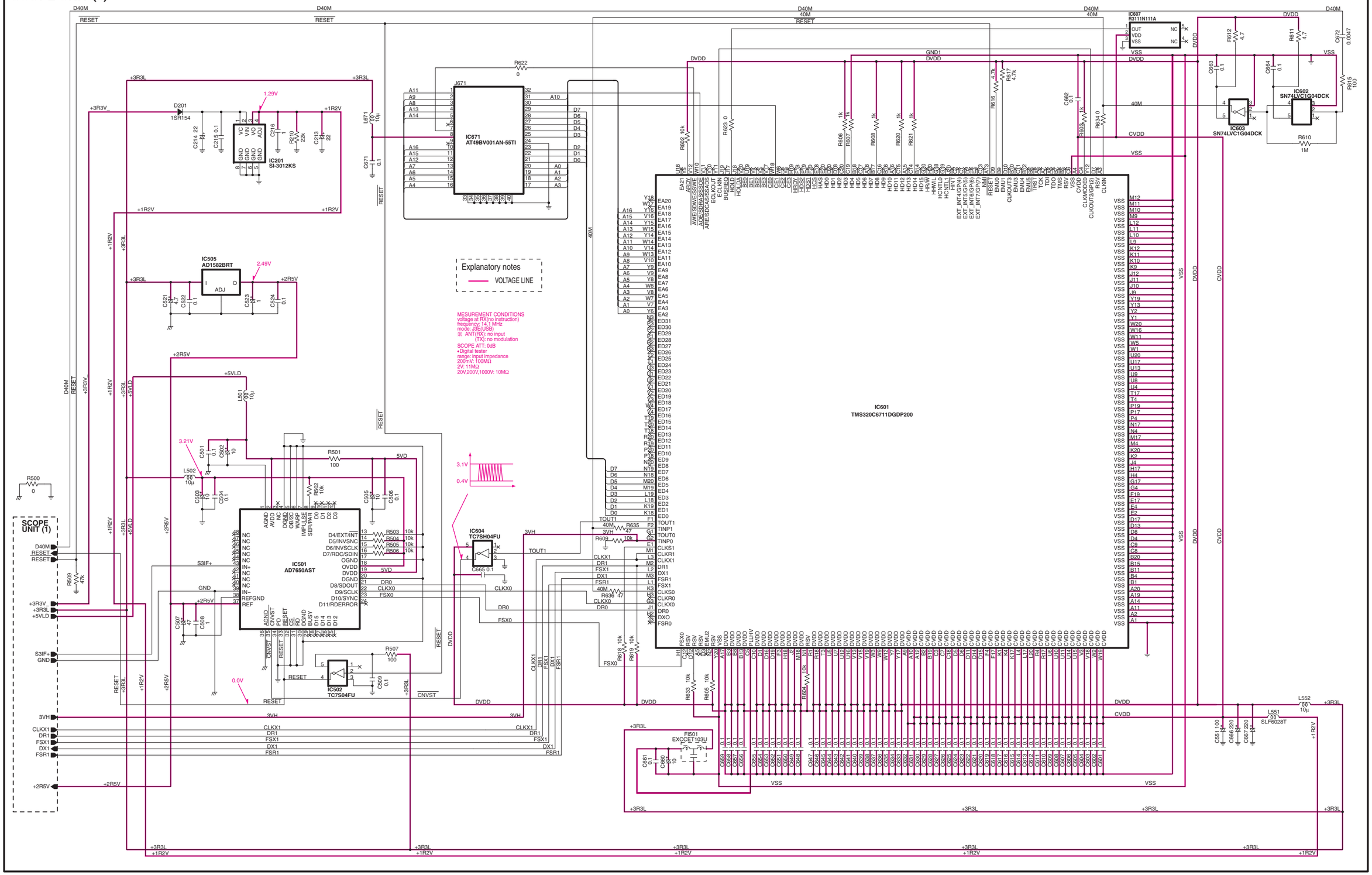
IC601
TMS320C6711DGDP200
IC671
AT49BV001AN-55TI
IC201
SI-3012KS
IC505
AD1582BRT
IC501
AD7650AST
IC502
TC7S04FU
IC604
TC7SH04FU
IC607
R3111N111A
IC602
SN74LVC1G04DCK
IC603
SN74LVC1G04DCK
Explanatory notes
VOLTAGE LINE
MESUREMENT CONDITIONS
voltage at RX(no instruction)
frequency: 14.1MHz
mode: J3E(USB)
※ ANT(RX): no input
(TX): no modulation
SCOPE ATT: 0dB
•Digital tester
range: input impedance
200mV: 100MΩ
2V: 11MΩ
20V,200V,1000V: 10MΩ
SCOPE UNIT (1)
1.29V
2.49V
3.21V
3.1V
0.4V
0.0V
D40M
RESET
+3R3L
+3R3V
+1R2V
+5VLD
+2R5V
DVDD
CVDD
VSS
40M
3VH
CLKX1
DR1
FSX1
DX1
FSR1
S3IF+
GND
CNVST
TOUT1
CLKX0
DR0
FSX0

# SCOPE UNIT (4)

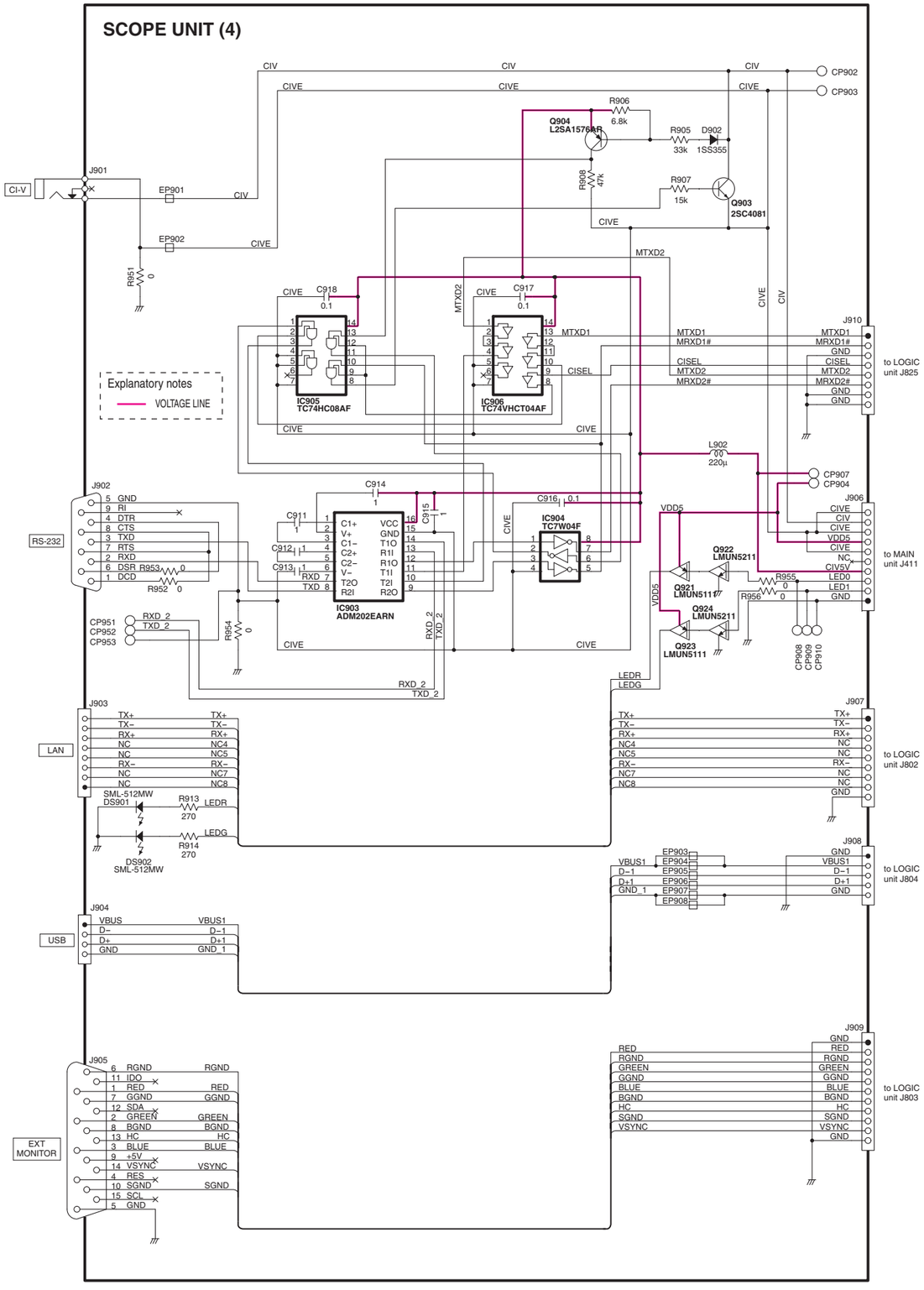
CI-V
J901
EP901
EP902
R951 0
CIV
CIVE
CP902
CP903
Q904 L2SA1576AR
R906 6.8k
R905 33k
D902 1SS355
R908 47k
R907 15k
Q903 2SC4081
MTXD2
C918 0.1
C917 0.1
IC905 TC74HC08AF
IC906 TC74VHCT04AF
MTXD1
CISEL
MRXD1#
MTXD2
MRXD2#
GND
J910
to LOGIC unit J825
Explanatory notes
VOLTAGE LINE
L902 220µ
CP907
CP904
J906
VDD5
CIV5V
LED0
LED1
NC
to MAIN unit J411
J902
RS-232
GND
RI
DTR
CTS
TXD
RTS
RXD
DSR
DCD
R952 0
R953 0
C914 1
C915 1
C916 0.1
C911 1
C912 1
C913 1
IC903 ADM202EARN
IC904 TC7W04F
RXD
TXD
RXD_2
TXD_2
CP951
CP952
CP953
R954 0
Q921 LMUN5111
Q922 LMUN5211
Q923 LMUN5111
Q924 LMUN5211
R955 0
R956 0
CP908
CP909
CP910
LEDR
LEDG
J903
LAN
TX+
TX-
RX+
RX-
NC
NC4
NC5
NC7
NC8
SML-512MW
DS901
DS902
R913 270
R914 270
J907
to LOGIC unit J802
J908
VBUS1
D-1
D+1
GND_1
EP903
EP904
EP905
EP906
EP907
EP908
to LOGIC unit J804
J904
USB
VBUS
D-
D+
GND
J909
RED
RGND
GREEN
GGND
BLUE
BGND
HC
SGND
VSYNC
to LOGIC unit J803
J905
EXT MONITOR
IDC
SDA
+5V
RES
SCL

# RXPLL-A/B UNIT (1)

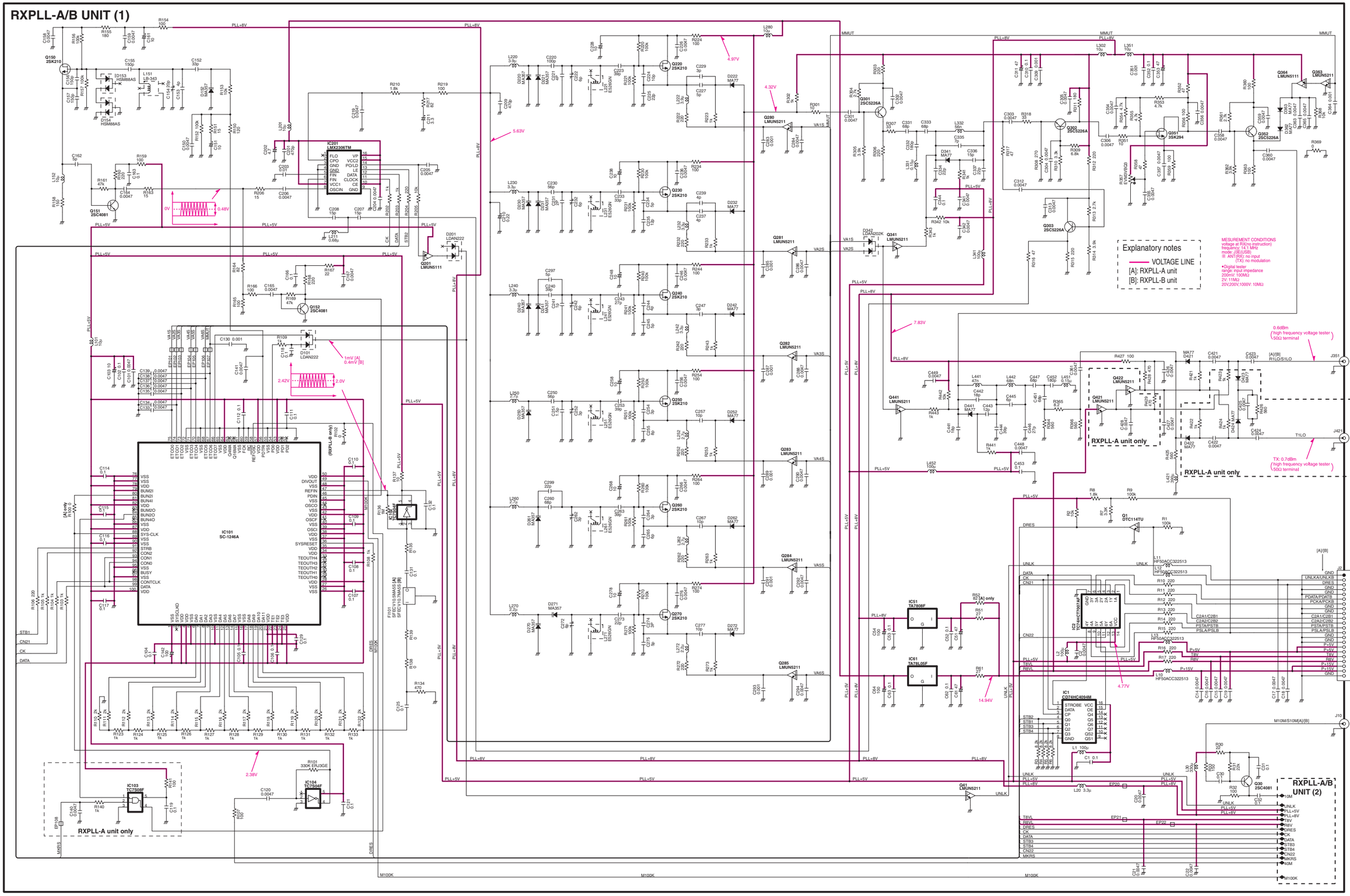

# RXPLL-A/B UNIT (2)

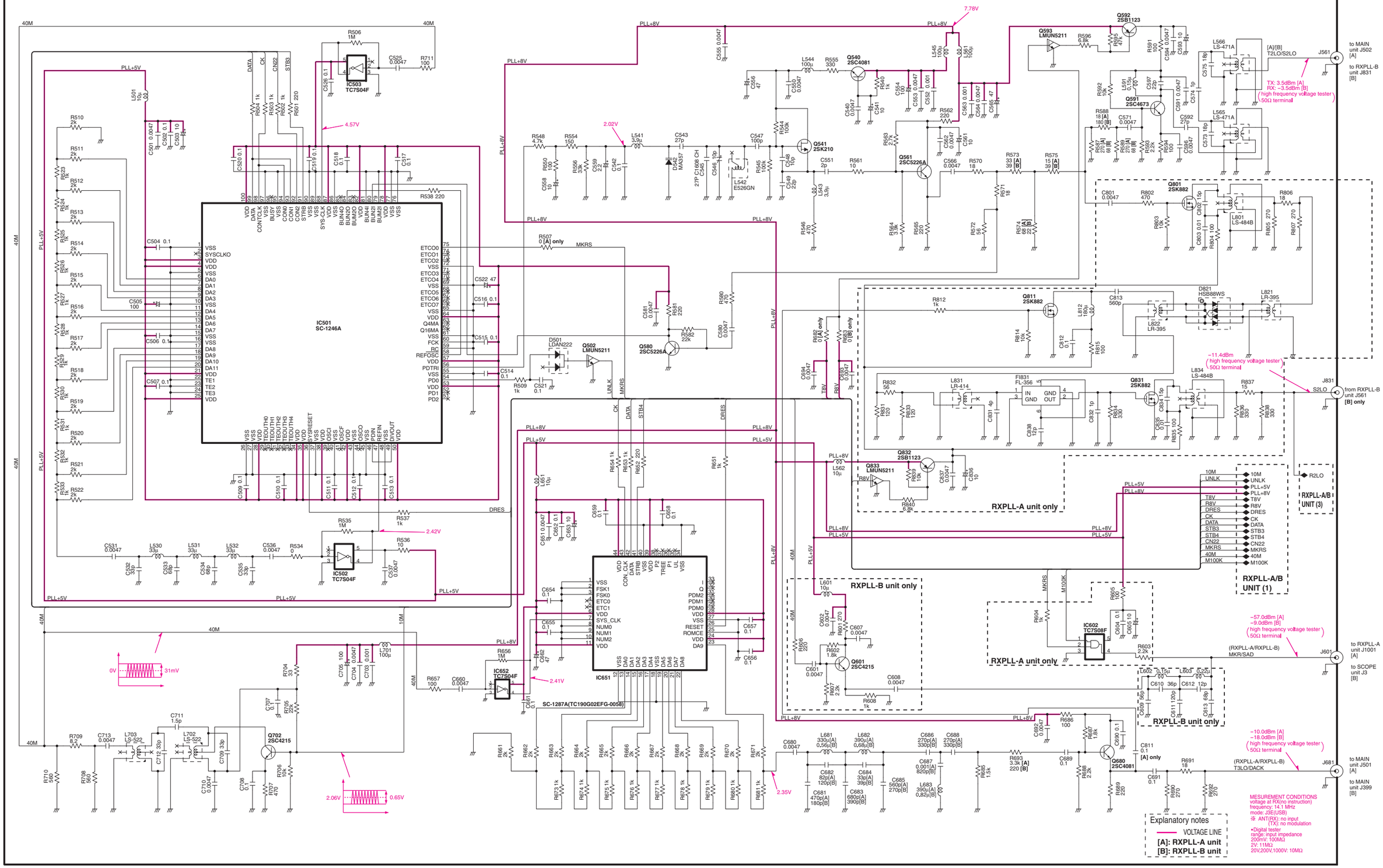

# RXPLL-A/B UNIT (3)

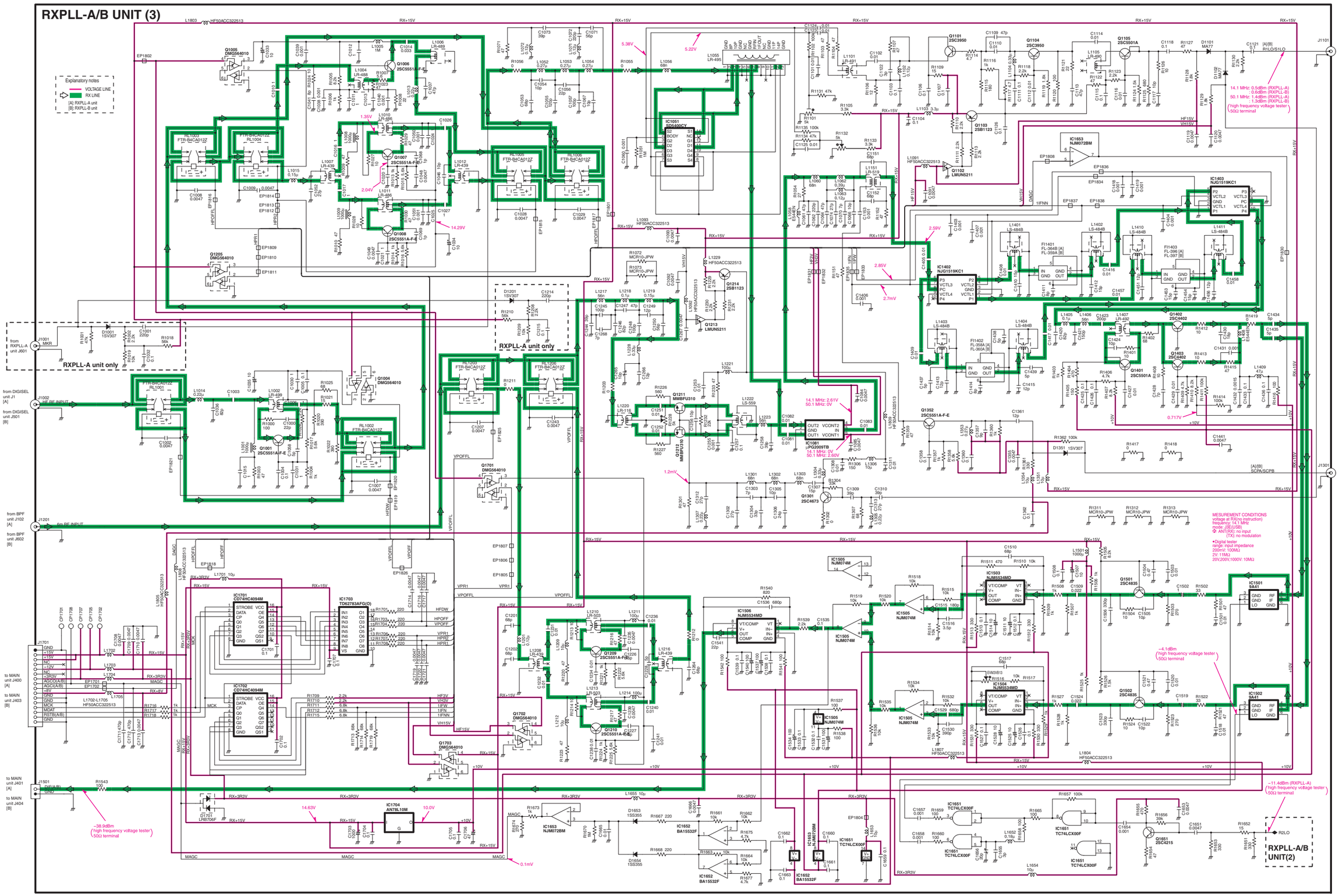

## DIGISEL UNIT (A)

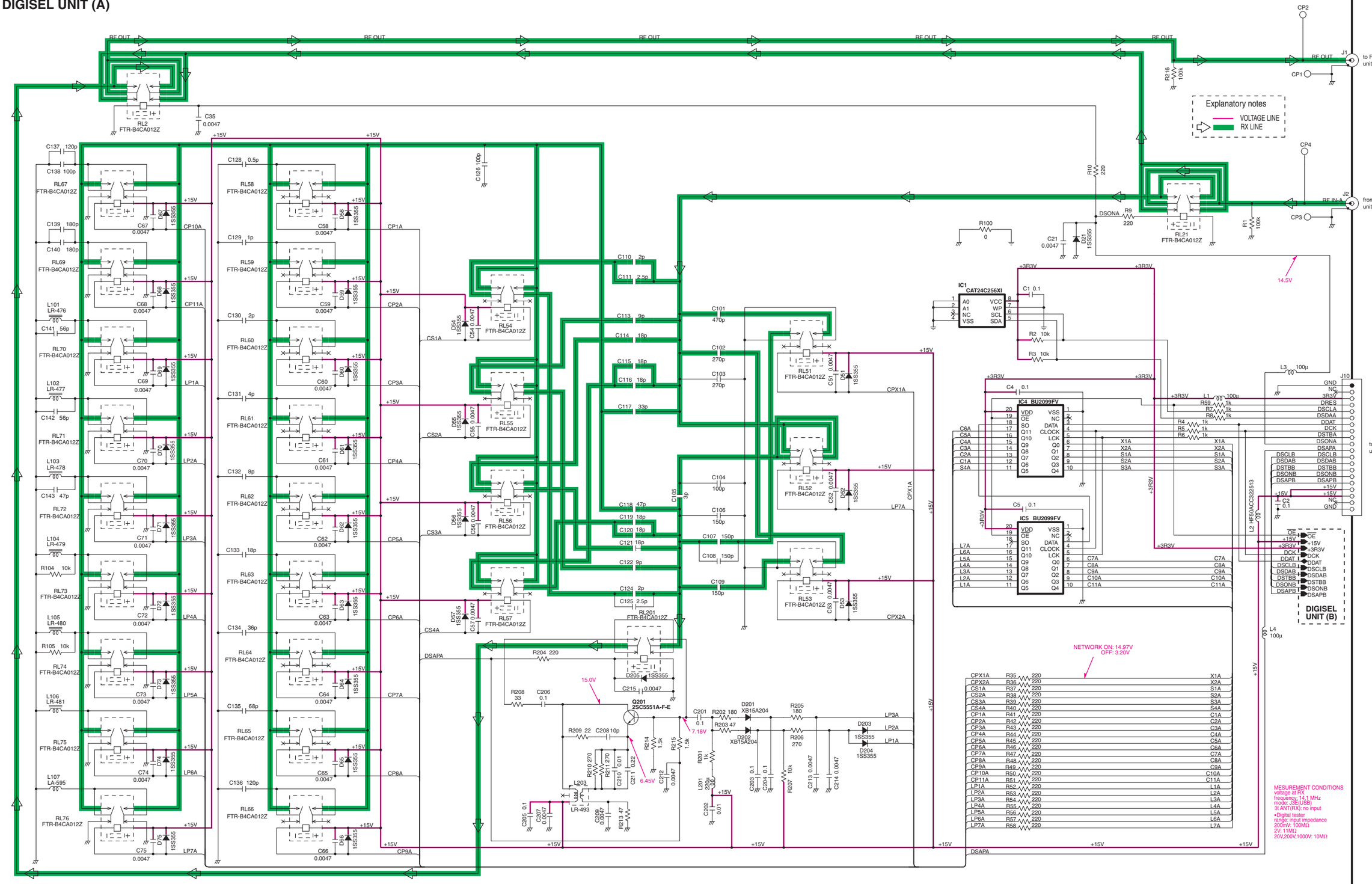

## DIGISEL UNIT (B)

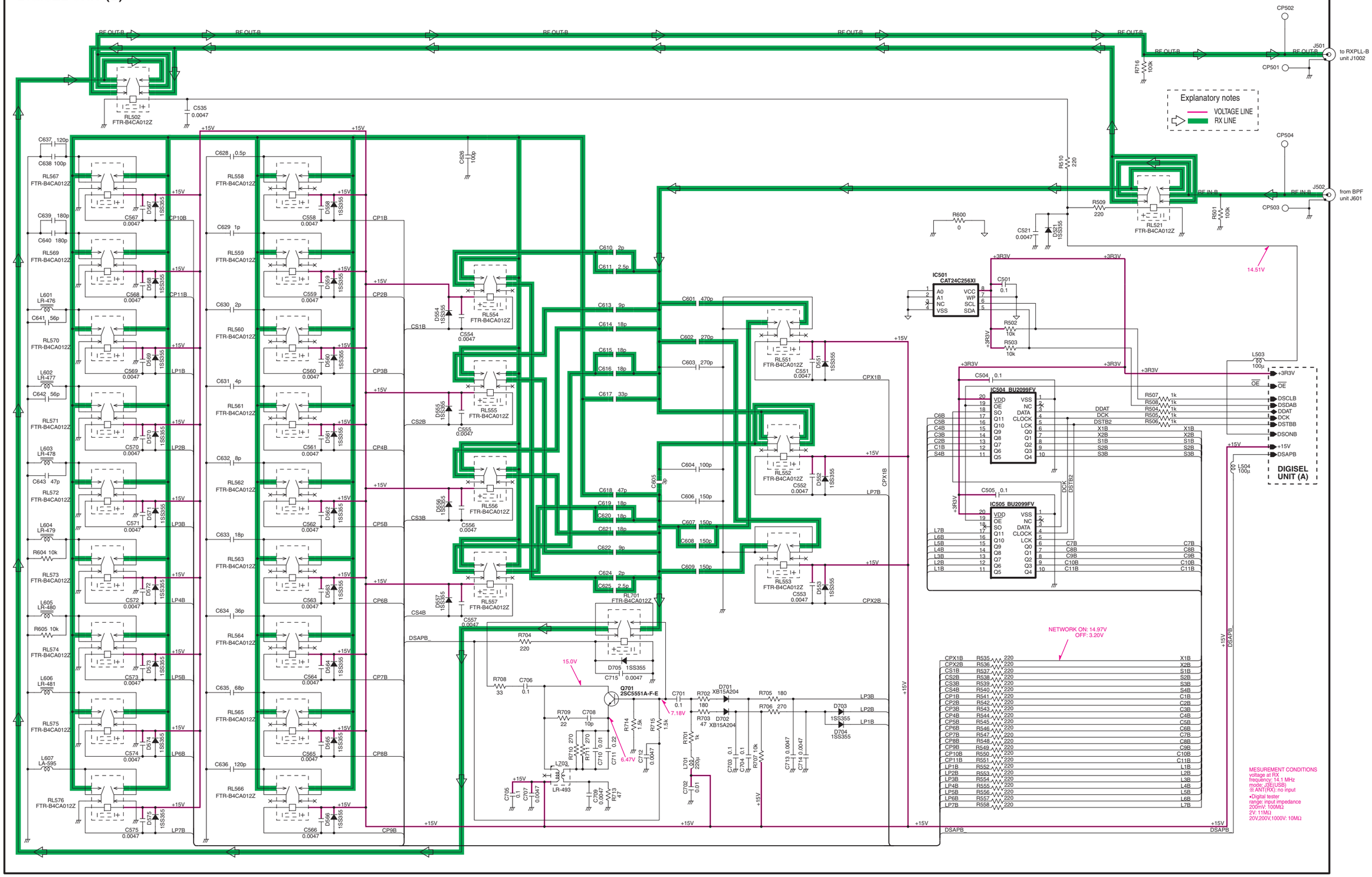

# OSC UNIT

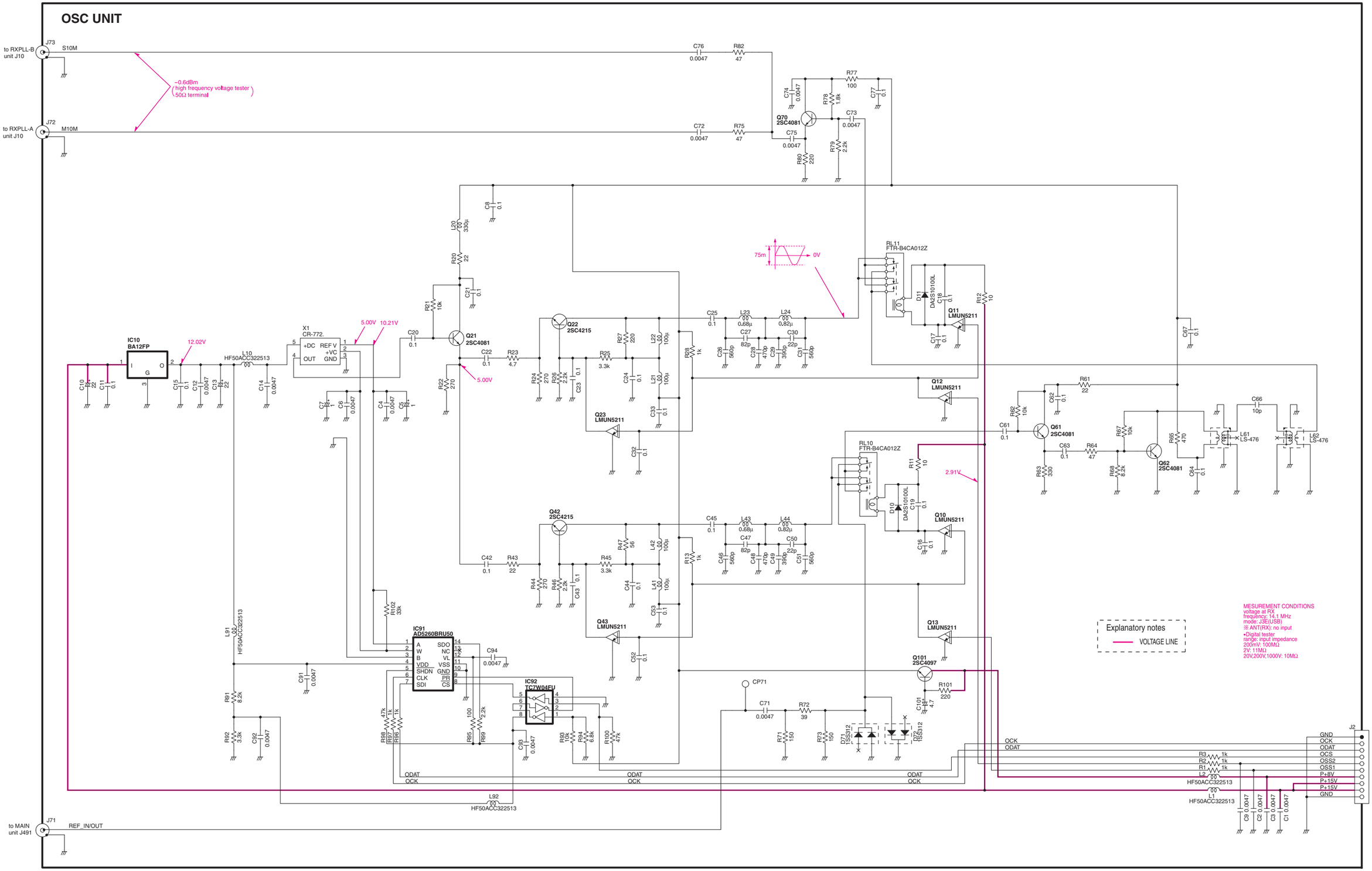
to RXPLL-B unit J10
J73
S10M
to RXPLL-A unit J10
J72
M10M
−0.6dBm (high frequency voltage tester 50Ω terminal)
C76 0.0047
R82 47
C72 0.0047
R75 47
Q70 2SC4081
R77 100
C74 0.0047
R78 1.8k
C77 0.1
C73 0.0047
C75 0.0047
R79 2.2k
R80 220
C8 0.1
L20 330µ
R20 22
C21 0.1
R21 10k
Q21 2SC4081
C20 0.1
C22 0.1
R23 4.7
5.00V
10.21V
X1 CR-772.
+DC REF V
+VC
OUT GND
12.02V
IC10 BA12FP
L10 HF50ACC322513
C10 22
C11 0.1
C15 0.1
C12 0.0047
C13 22
C14 0.0047
C7 1
C6 0.0047
C4 0.0047
C5 1
R22 270
Q22 2SC4215
R24 270
R26 2k
C23 0.1
R25 3.3k
R27 220
L22 100µ
C24 0.1
L21 100µ
C33 0.1
Q23 LMUN5211
C32 0.1
R28 1k
C25 0.1
L23 0.68µ
L24 0.82µ
C26 560p
C27 82p
C28 470p
C29 390p
C30 22p
C31 560p
75m
0V
RL11 FTR-B4CA012Z
D11 DA2S10100L
C18 0.1
Q11 LMUN5211
C17 0.1
R12 10
C67 0.1
Q12 LMUN5211
R61 22
C62 0.1
R62 10k
Q61 2SC4081
C61 0.1
C63 0.1
R64 47
R63 330
R67 10k
R68 8.2k
Q62 2SC4081
R65 470
C64 0.1
C66 10p
L61 LS-476
L62 LS-476
RL10 FTR-B4CA012Z
R11 10
2.91V
D10 DA2S10100L
C19 0.1
Q10 LMUN5211
C16 0.1
Q42 2SC4215
C45 0.1
L43 0.68µ
L44 0.82µ
C47 82p
C50 22p
C46 560p
C48 470p
C49 390p
C51 560p
C42 0.1
R43 22
R45 3.3k
R47 56
L42 100µ
R44 270
R46 2k
C43 0.1
C44 0.1
L41 100µ
C53 0.1
R13 1k
Q43 LMUN5211
C52 0.1
Q13 LMUN5211
Q101 2SC4097
R101 220
C101 4.7
CP71
C71 0.0047
R72 39
R71 150
R73 150
D71 1SS312
D72 1SS312
R70 33k
L91 HF50ACC322513
IC91 AD5260BRU50
A SDO
W NC
B VL
VDD VSS
SHDN GND
CLK PR
SDI CS
C94 0.0047
C91 0.0047
IC92 TC7W04FU
R91 8.2k
R92 3.3k
C92 0.0047
R98 47k
R97 1k
R96 1k
R95 100
R99 2.2k
C93 0.0047
R89 10k
R94 6.8k
R100 47k
L92 HF50ACC322513
ODAT
OCK
OCK
ODAT
Explanatory notes
VOLTAGE LINE
MESUREMENT CONDITIONS
voltage at RX
frequency: 14.1 MHz
mode: J3E(USB)
※ ANT(RX): no input
•Digital tester
range: input impedance
200mV: 100MΩ
2V: 11MΩ
20V,200V,1000V: 10MΩ
J2
GND
OCK
ODAT
OSS
OSS2
OSS1
P+8V
P+15V
P+15V
GND
to LOGIC unit J814
R3 1k
R2 1k
R1 1k
L2 HF50ACC322513
L1 HF50ACC322513
C9 0.0047
C2 0.0047
C3 0.0047
C1 0.0047
to MAIN unit J491
J71
REF_IN/OUT

## ANT-SW UNIT

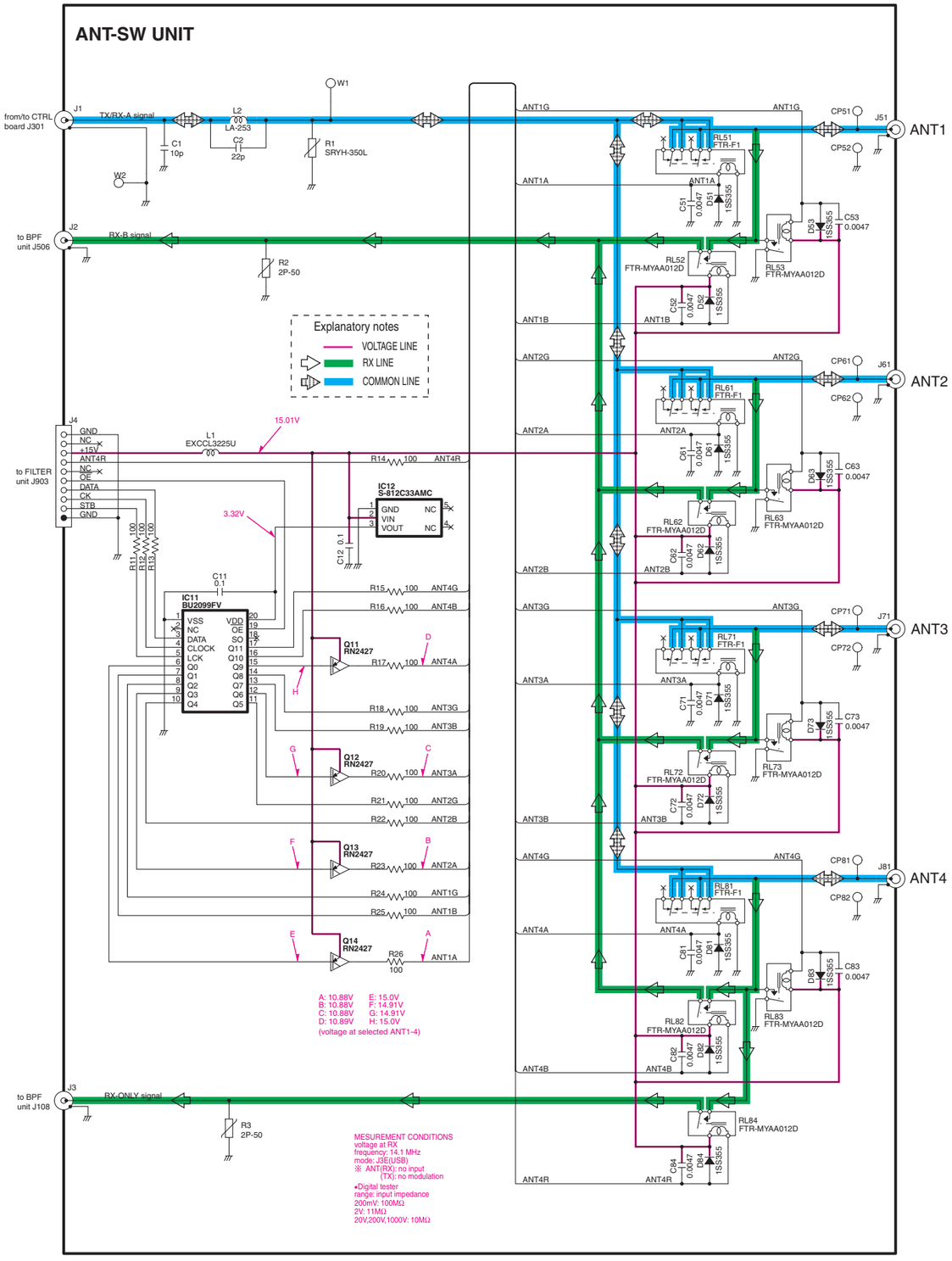


## FILTER UNIT

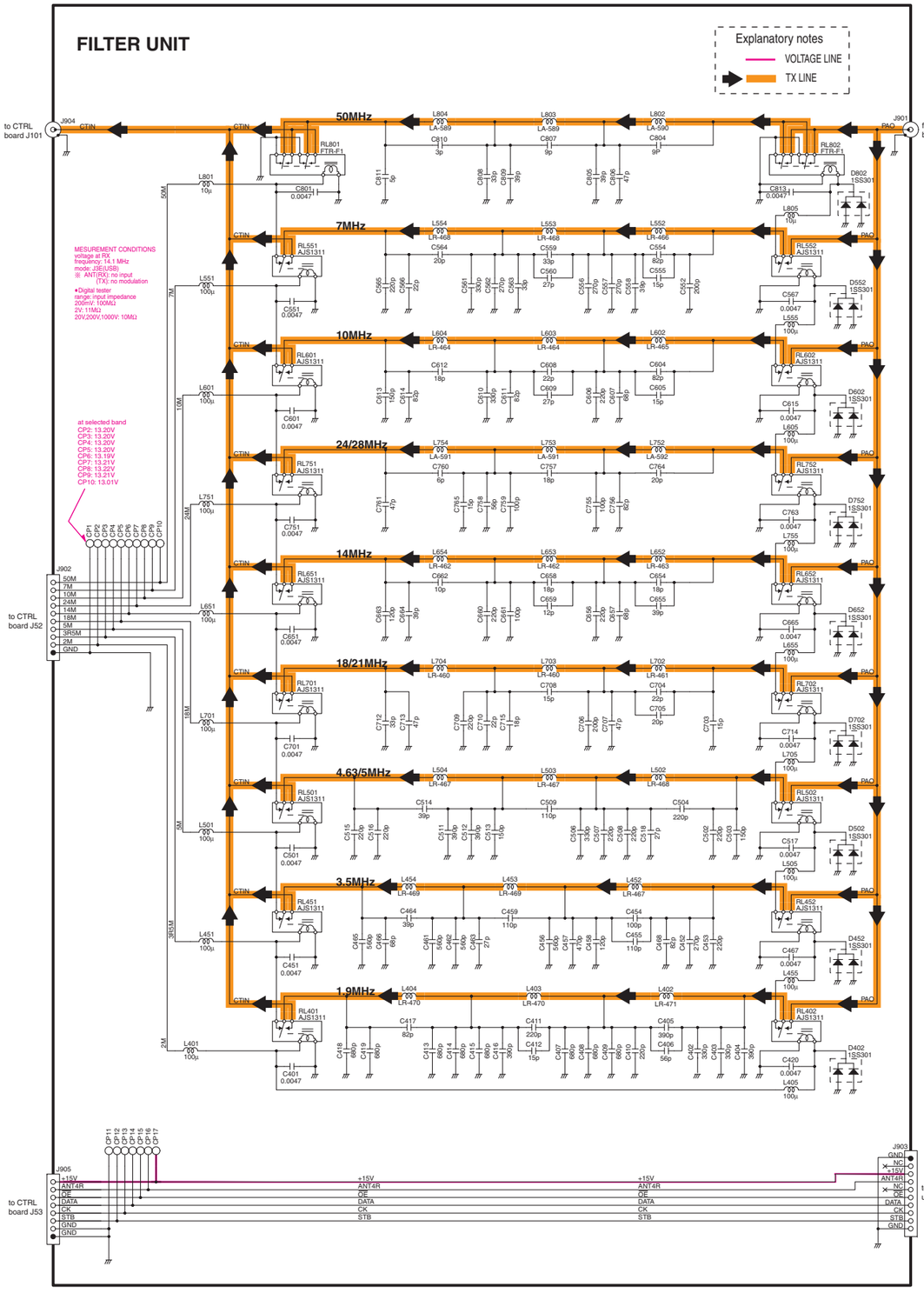

# BPF UNIT (1)

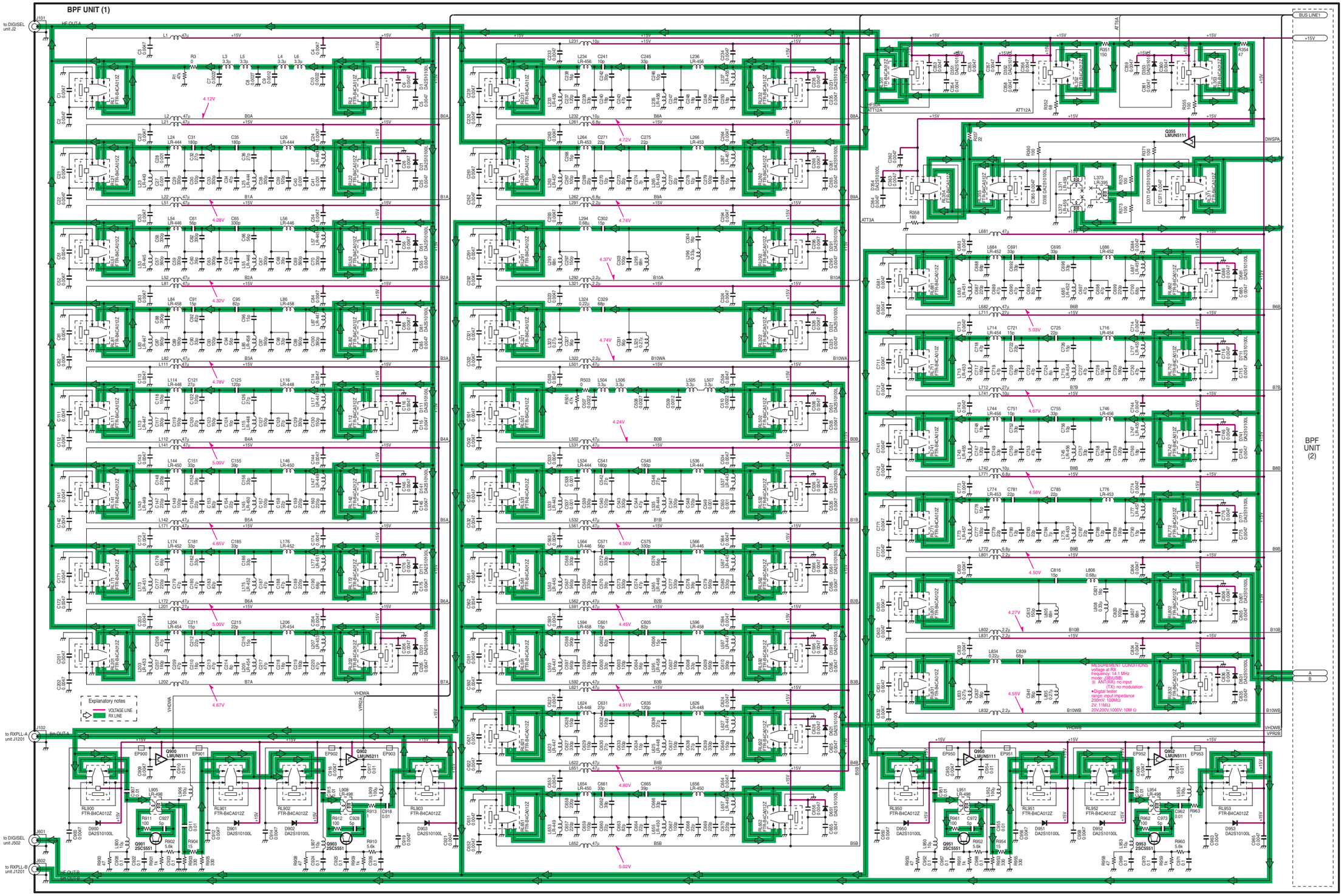
to DIGISEL unit J2
J101
HF OUT A
BUS LINE1
+15V
4.12V
4.28V
4.32V
4.78V
5.00V
4.65V
5.00V
4.67V
4.24V
4.72V
4.74V
4.37V
4.74V
4.50V
4.45V
4.91V
4.80V
5.02V
4.67V
5.03V
4.67V
4.58V
4.50V
4.27V
4.55V
AT12A
AT3A
DWSPA
VHDWA
VPR2A
VHDWB
VPR2B
BPF UNIT (2)
Explanatory notes
VOLTAGE LINE
RX LINE
to RXPLL-A unit J1201
J102
6m OUT A
to DIGISEL unit J502
J601
J602
to RXPLL-B unit J1201
HF OUT B
6m OUT B
MEASUREMENT CONDITIONS
voltage at RX
frequency: 14.1MHz
mode: CE(USB)
※: ANT(RX): no input
(TX): no modulation
•Digital tester
range: input impedance
200mV: 100MΩ
2V: 11MΩ
20V,200V,1000V: 10M Ω

## BPF UNIT (2)

BUS LINE1

BPF UNIT (1)

display of TX frequency (MHz) / port

| | |
|---|---|
| 0.030000 ～ 1.599999 | B0 |
| 1.600000 ～ 1.999999 | B1 |
| 2.000000 ～ 2.999999 | B2 |
| 3.000000 ～ 3.999999 | B3 |
| 4.000000 ～ 5.999999 | B4 |
| 6.000000 ～ 7.999999 | B5 |
| 8.000000 ～ 10.999999 | B6 |
| 11.000000～ 14.999999 | B7 |
| 15.000000～ 21.999999 | B8 |
| 22.000000～ 29.999999 | B9 |
| 30.000000～ 60.000000 | B10 |

| ATT | AT3A | AT6 | AT12 |
|---|---|---|---|
| OFF | L | L | L |
| 3dB | H | L | L |
| 6dB | L | H | L |
| 9dB | H | H | L |
| 12dB | L | L | H |
| 15dB | H | L | H |
| 18dB | L | H | H |
| 21dB | H | H | H |

L: 2.0V H: 15.0V

Explanatory notes
VOLTAGE LINE
RX LINE

MESUREMENT CONDITIONS
voltage at RX
frequency: 14.1 MHz
mode: J3E(USB)
※ ANT(RX): no input
(TX): no modulation
•Digital tester
range: input impedance
200mV: 100MΩ
2V: 11MΩ
20V,200V,1000V: 10M Ω

to LOGIC unit J812
to MAIN unit J802
X-VERTER
RX_ANT OUTB(BNC)
from ANT-SW unit J2
RX_ANT INA(BNC)
RX_ANT INB(BNC)
RX_ANT OUTA(BNC)
from ANT-SW unit J3
from CTRL board J351
ACCESSORIES W2

## NETWORK BOARD

Explanatory notes
VOLTAGE LINE
TX LINE

from/to CTRL board J251
from/to CTRL board J252
to CTRL board J51

MESUREMENT CONDITIONS
voltage at RX
frequency: 14.1 MHz
mode: J3E(USB)
(TX): no modulation
TUNER ON
•Digital tester
range: input impedance
200mV: 100MΩ
2V: 11MΩ
20V,200V,1000V: 10MΩ

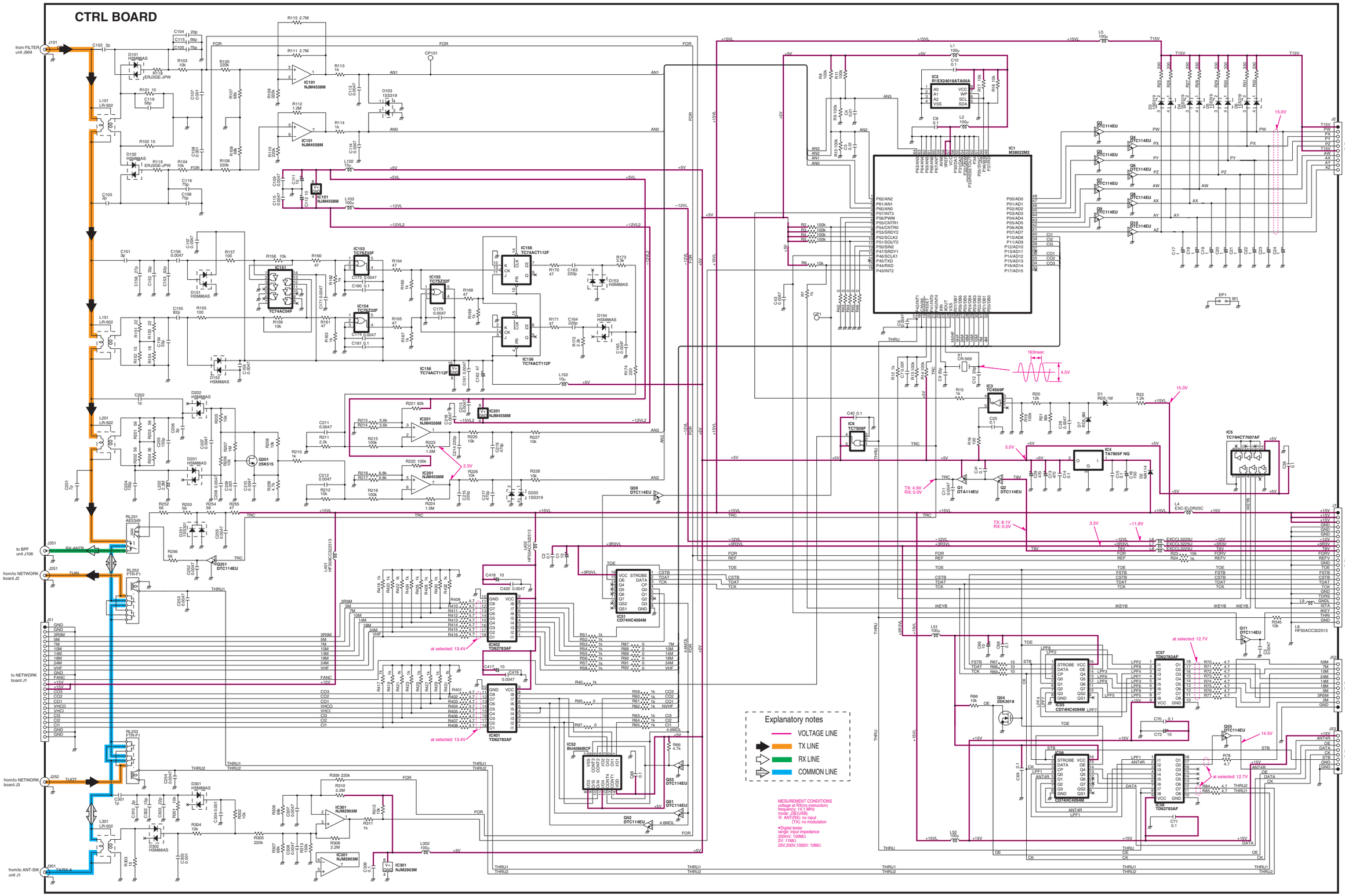
CTRL BOARD
Explanatory notes
VOLTAGE LINE
TX LINE
RX LINE
COMMON LINE
MESUREMENT CONDITIONS
voltage at RX(no instruction)
frequency: 14.1 MHz
mode: J3E(USB)
※ ANT(RX): no input
(TX): no modulation
•Digital tester
range: input impedance
200mV: 100MΩ
2V: 11MΩ
20V,200V,1000V: 10MΩ
from FILTER unit J904
to BPF unit J106
from/to NETWORK board J2
to NETWORK board J1
from/to NETWORK board J3
from/to ANT-SW unit J1
to TUNER unit MF1,MF2
to LOGIC unit J811
to FILTER unit J902
to FILTER unit J905
IC1 M38022M2
IC2 R1EX24016ATA00A
IC3 TC4S69F
IC4 TA7805F NQ
IC5 TC74HCT7007AF
IC6 TC7S08F
IC101 NJM4558M
IC151 TC74AC04F
IC153 TC7SZ32F
IC154 TC7SZ32F
IC155 TC7SZ32F
IC156 TC74ACT112F
IC201 NJM4558M
IC301 NJM2903M
IC401 TD62783AF
IC402 TD62783AF
IC51 CD74HC4094M
IC52 BU4066BCF
IC55 CD74HC4094M
IC56 CD74HC4094M
IC57 TD62783AF
IC58 TD62783AF
Q1 DTA114EU
Q2 DTC114EU
Q3 DTC114EU
Q4 DTC114EU
Q5 DTC114EU
Q6 DTC114EU
Q7 DTC114EU
Q8 DTC114EU
Q9 DTC114EU
Q10 DTC114EU
Q11 DTC114EU
Q51 DTC114EU
Q52 DTC114EU
Q53 DTC114EU
Q54 2SK3018
Q55 DTC114EU
Q201 2SK515
163nsec
4.5V
15.0V
5.0V
3.3V
−11.8V
14.5V
2.5V
at selected: 13.4V
at selected: 12.7V
TX: 4.9V
RX: 0.0V
TX: 8.1V
RX: 0.0V

# PA200W BOARD

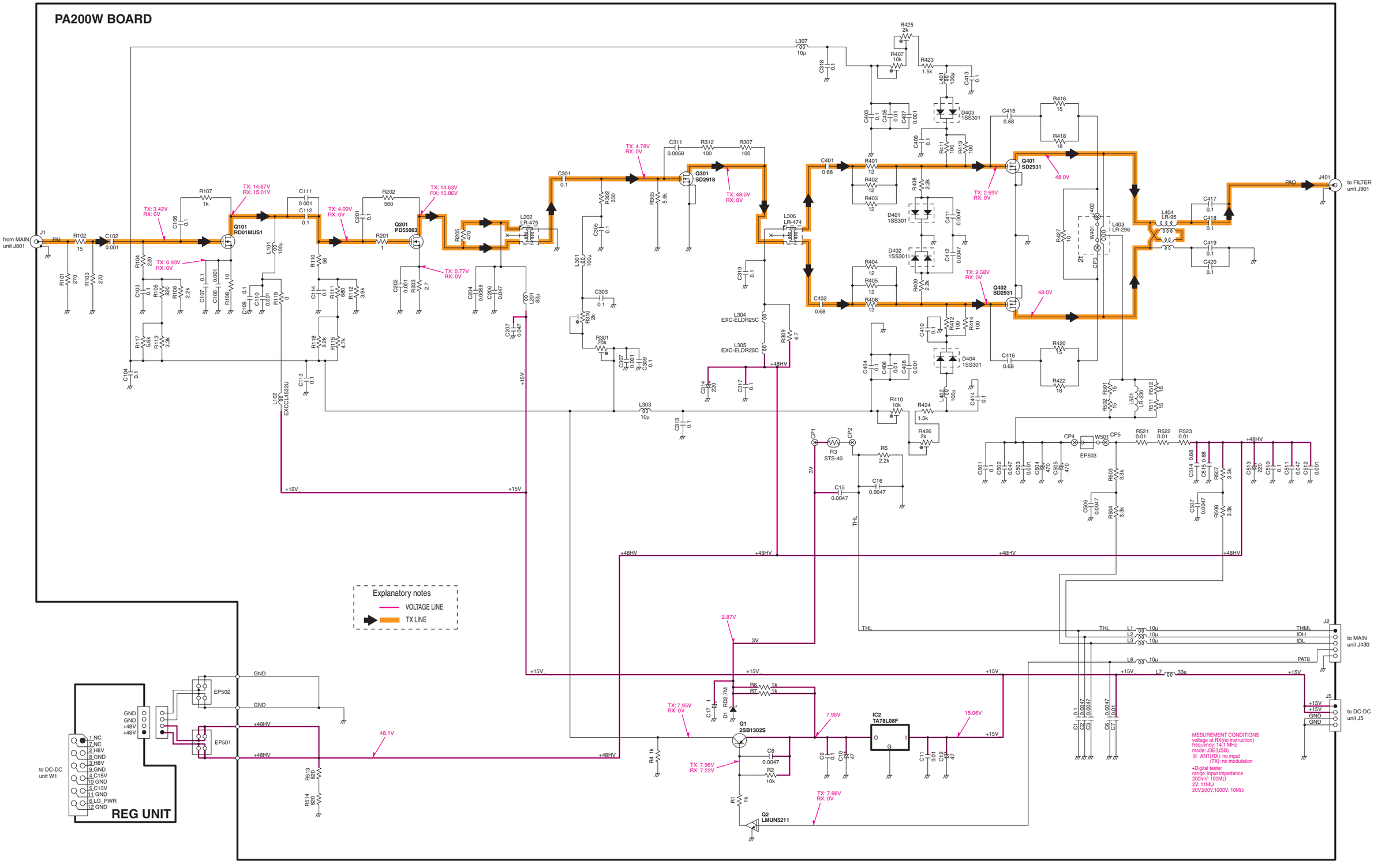

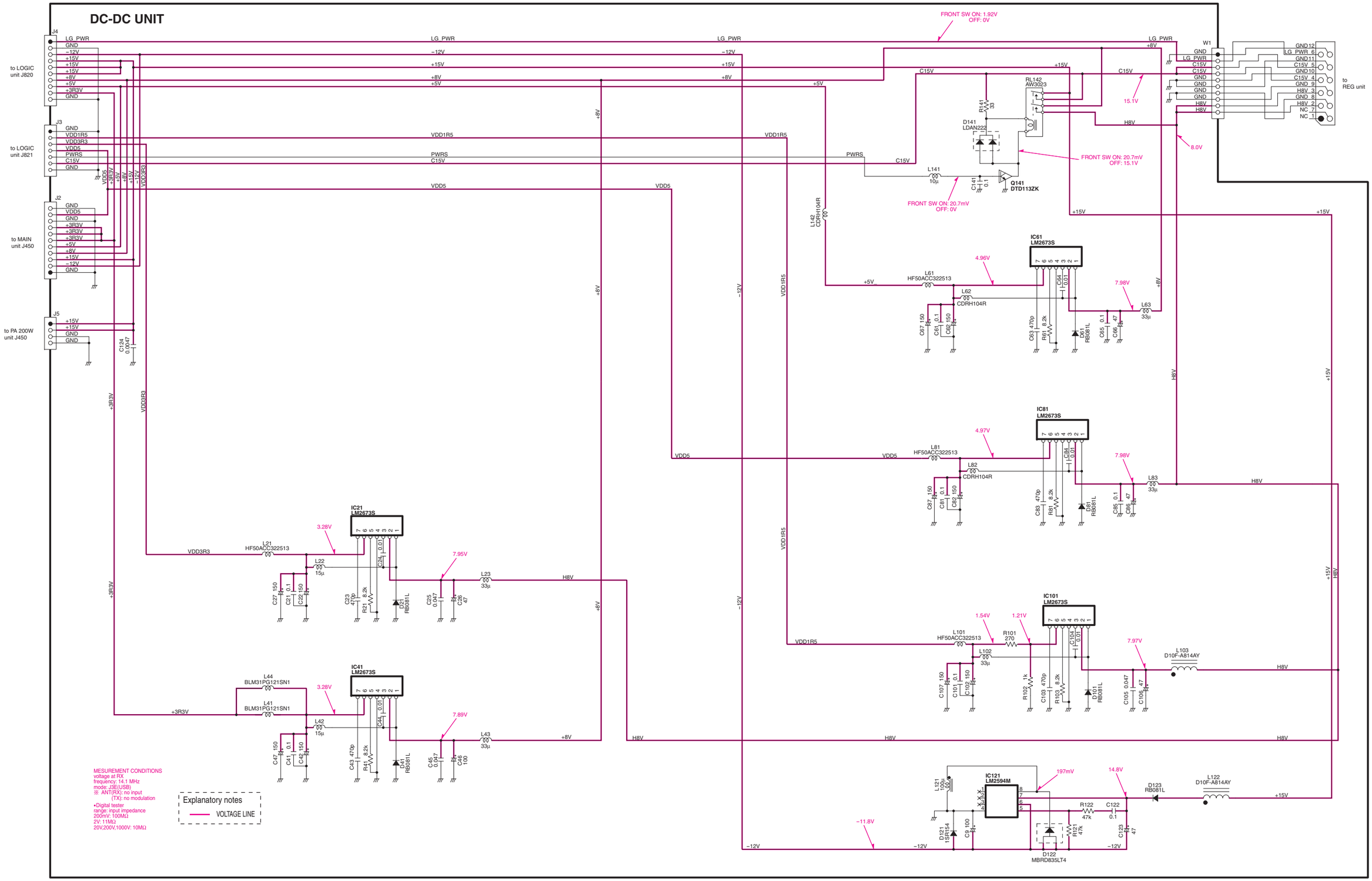
DC-DC UNIT
to LOGIC unit J820
to LOGIC unit J821
to MAIN unit J450
to PA 200W unit J450
to REG unit
FRONT SW ON: 1.92V OFF: 0V
FRONT SW ON: 20.7mV OFF: 15.1V
FRONT SW ON: 20.7mV OFF: 0V
RL142 AW3023
D141 LDAN222
Q141 DTD113ZK
IC61 LM2673S
IC81 LM2673S
IC21 LM2673S
IC41 LM2673S
IC101 LM2673S
IC121 LM2594M
D122 MBRD835LT4
D123 RB081L
L103 D10F-A814AY
L122 D10F-A814AY
MESUREMENT CONDITIONS
voltage at RX
frequency: 14.1 MHz
mode: J3E(USB)
※ ANT(RX): no input
(TX): no modulation
•Digital tester
range: input impedance
200mV: 100MΩ
2V: 11MΩ
20V,200V,1000V: 10MΩ
Explanatory notes
VOLTAGE LINE

# Icom Inc.

1-1-32, Kamiminami, Hirano-ku, Osaka 547-0003, Japan
Phone : +81 (06) 6793 5302
Fax : +81 (06) 6793 0013
URL : http://www.icom.co.jp/world/index.html

## Icom America Inc.

<Corporate Headquarters>
2380 116th Avenue N.E., Bellevue, WA 98004, U.S.A.
Phone : +1 (425) 454-8155 Fax : +1 (425) 454-1509
URL : http://www.icomamerica.com
E-mail : sales@icomamerica.com
<Customer Service>
Phone : +1 (425) 454-7619

## Icom Canada

Glenwood Centre #150-6165
Highway 17 Delta, B.C., V4K 5B8, Canada
Phone : +1 (604) 952-4266 Fax : +1 (604) 952-0090
URL : http://www.icomcanada.com
E-mail : info@icomcanada.com

## Icom (Australia) Pty. Ltd.

Unit 1 / 103 Garden Road, Clayton VIC 3168 Australia
Phone : +61 (03) 9549-7500 Fax : +61 (03) 9549-7505
URL : http://www.icom.net.au
E-mail : sales@icom.net.au

## Icom New Zealand

146A Harris Road, East Tamaki,
Auckland, New Zealand
Phone : +64 (09) 274 4062 Fax : +64 (09) 274 4708
URL : http://www.icom.co.nz
E-mail : inquiries@icom.co.nz

## Beijing Icom Ltd.

10C07, Long silver Mansion, No.88, Yong Ding
Road, Haidian District, Beijing, 100039, China
Phone : +86 (010) 5889 5391/5392/5393
Fax : +86 (010) 5889 5395
E-mail : bjicom@bjicom.com
URL : http://www.bjicom.com

## Icom Brazil

Rua Pernambuco, 353 - Sala 901, Belo Horizonte, M.G.
30130-150, Brazil
Phone : +55 (31) 3582 8847 Fax : +55 (31) 3582 8987
E-mail : sales@icombrazil.com

## Icom (Europe) GmbH

Communication Equipment
Auf der Krautweide 24
65812 Bad Soden am Taunus, Germany
Phone : +49 (6196) 76685-0 Fax : +49 (6196) 76685-50
URL : http://www.icomeurope.com
E-mail : info@icomeurope.com

## Icom Spain S.L

Ctra. Rubi, No. 88 Bajos A 08174, Sant Cugat del Valles, Barcelona, Spain
Phone : +34 (93) 590 26 70 Fax : +34 (93) 589 04 46
URL : http://www.icomspain.com
E-mail : icom@icomspain.com

## Icom (UK) Ltd.

Blacksole House, Altira Park, Herne Bay, Kent CT6 6GZ, UK
Phone : +44 (0) 1227 741741 Fax : +44 (0) 1227 741742
URL : http://www.icomuk.co.uk
E-mail : info@icomuk.co.uk

## Icom France s.a.s.

Zac de la Plaine
1 Rue Brindejonc des Moulinais BP 5804
31505 Toulouse Cedex, France
Phone : +33 (5) 61 36 03 03 Fax : +33 (5) 61 36 03 00
URL : http://www.icom-france.com
E-mail : icom@icom-france.com

## Asia Icom Inc.

6F No.68, Sec. 1 Cheng-Teh Road, Taipei, Taiwan, R.O.C.
Phone : +886 (02) 2559 1899 Fax : +886 (02) 2559 1874
URL : http://www.asia-icom.com
E-mail : sales@asia-icom.com

## Icom Polska

81-850 Sopot, ul. 3 Maja 54, Poland
Phone : +48 (58) 550 7135 Fax : +48 (58) 551 0484
E-mail : icompolska@icompolska.com.pl

**Count on us!**

Icom Inc.
1-1-32, Kamiminami, Hirano-ku, Osaka 547-0003, Japan

S-14015HZ-C1-③
©2004–2012 Icom Inc.